SONY

DIGITAL AUDIO RECORDER

PCM-7050

MAINTENANCE MANUAL

1st Edition (Revised 7)

Serial No. 20001 and Higher(UC)

Serial No. 50001 and Higher(EK)

SAFETY CHECK-OUT

After correcting the original service problem, perform the following safety checks before releasing the set to the customer:

Check the metal trim, "metallized" knobs, screws, and all other exposed metal parts for AC leakage. Check leakage as described below.

LEAKAGE TEST

The AC leakage from any exposed metal part to earth ground and from all exposed metal parts to any exposed metal part having a return to chassis, must not exceed 3.5 mA. Leakage current can be measured by any one of three methods.

1. A commercial leakage tester, such as the Simpson 229 or RCA WT-540A. Follow the manufacturers' instructions to use these instruments.

2. A battery-operated AC milliammeter. The Data Precision 245 digital multimeter is suitable for this job.

3. Measuring the voltage drop across a resistor by means of a VOM or battery-operated AC voltmeter. The "limit" indication is 5.25 V, so analog meters must have an accurate low-voltage scale. The Simpson 250 and Sanwa SH-63Trd are examples of a passive VOM that is suitable. Nearly all battery operated digital multimeters that have a 20 V AC range are suitable. (See Fig. A)

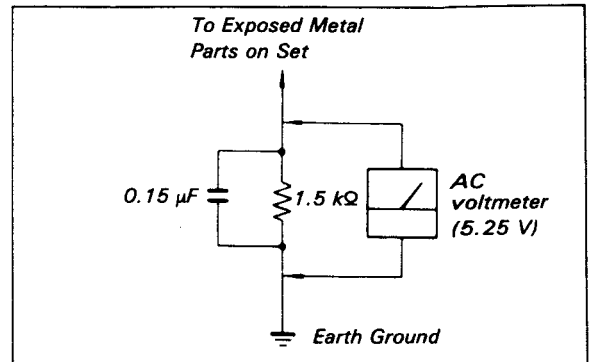

Fig. A. Using an AC voltmeter to check AC leakage.

TABLE OF CONTENTS

1. INSTALLATION
1-1. Packing 1-1
1-2. Installation Environment and Installation Space 1-2
1-3. Rack mounting method 1-4
1-4. Installation of the DABK-7030, DABK-7033 and DABK-7055 1-7
1-4-1. DABK-7030 Installation Procedure 1-7
1-4-2. DABK-7033 Installation Procedure 1-11
1-4-3. DABK-7055 Installation Procedure 1-14
1-5. Initial Settings of the Board's Switches and Volumes 1-16
1-5-1. Level schedule change (ADA-18 Board) 1-16
1-5-2. Fader Start/Stop Change Procedure (RM-77 Board) 1-17

2. SERVICE INFORMATION
2-1. Removal of Boards and Major Mechanical Parts 2-1
2-2. Board Arrangement View For PCM-7050 2-15
2-3. Cassette Compartment Service Information 2-16
2-4. Precautions for the main Parts replacement procedure 2-19
2-4-1. Installation position of the front panel and cassette compartment 2-19
2-5. Chip Parts Replacement Procedure ... 2-19
2-6. SERVICE INFORMATION CONCERNING THE SY-155A BOARD (SYSTEM CONTROL) 2-20
2-6-1. LED for confirming the operations of the SY-155A Board 2-20
2-6-2. Replacing the SY-155A Board 2-23
2-6-3. Replacing the lithium battery (CR-2450) 2-25
2-7. Self-diagnosis (error code) 2-26
2-7-1. Error codes 2-26
2-7-2. Remedy for error code "Error 2-05" 2-31
2-8. SERVICE MENU 2-32
2-8-1. SERVICE MENU Structure 2-33
2-8-2. SERVICE MENU items 2-34
2-9. Tools and Instruments 2-50

3. PERIODICAL INSPECTION AND MAINTENANCE
3-1. Cleaning 3-1
3-2. Periodical Inspection and Maintenance Procedures 3-2
3-3. Post-Repair Maintenance 3-2

4. MECHANICAL ADJUSTMENT, TAPE PATH ADJUSTMENT, SERVO BLOCK ADJUSTMENT, RECORDING/PLAYBACK BLOCK ADJUSTMENT, AND ERROR RATE CHECK
4-1. Preparation 4-5
4-2. Mechanical Device Test (operation check) 4-6
4-3. Mechanical Adjustment 4-6
4-3-1. Rotary encoder position adjustment 4-7
4-3-2. End sensor (S side, T side) operation check 4-9
4-3-3. FF/REW torque check 4-10
4-3-4. REW torque adjustment (DR-139 board adjustment) 4-11
4-3-5. REV torque adjustment 4-12
4-3-6. FWD back tension adjustment ... 4-13
4-3-7. EJECT torque check 4-13
4-3-8. FF/REW time check 4-14
4-4. Tape Path Adjustment 4-14
4-4-1. Tape running check (1) 4-14
4-4-2. Tape running check (2) 4-16
4-4-3. Tape path fine adjustment 4-16
4-4-4. RF raise up time check 4-19
4-4-5. Lack of RF waveform check in FF/REW 4-19
4-4-6. Overall tape path check 4-20
4-5. Servo Block Adjustment 4-21
4-5-1. SWP position adjustment 4-21
4-5-2. ATF playback AGC adjustment 4-22
4-6. Recording/Playback Adjustment (Recording current level adjustment) ... 4-24
4-6-1. Adjustment using the RF LEVEL CHECKER PD-817 4-24

4-6-2. Adjustment using a spectrum analyzer 4-32
4-7. EQ-H preset (RF-31 board) and error rate check 4-40
4-7-1. EQ-H preset (RF-31 board) 4-40
4-7-2. Error Rate Check 4-40
4-8. Cassette Compartment Operation Check 4-47

5. ELECTRICAL ADJUSTMENTS

5-1. Initial Preparation 5-2
5-1-1. Equipment Required 5-2
5-1-2. Initial switch and control settings 5-3
5-2. Signal Processing Adjustment (SP-13 BOARD) 5-5
5-2-1. RF PLL Adjustment 5-5
5-2-2. LTS Adjustment 5-9
5-3. A/D and D/A Adjustment (ADA-18 BOARD) 5-11
5-3-1. A/D Conversion Level Adjustment 5-11
5-3-2. Center potential adjustment 5-13
5-3-3. D/A conversion level adjustment 5-13
5-4. Time Code Adjustment (With the optional TC-58 board (DABK-7030) installed.) 5-17

A. BLOCK DIAGRAMS

OVERALL A-2
MECHANISM DECK A-5
ADA-18 ..... A-9
DIO-10 ..... A-12
DR-139 ..... A-15
KY-192/LED-104/SW-420 ..... A-19
MEM-40A A-23
PS-211 ..... A-27
RF-31 ..... A-31
RM-77 ..... A-34
SP-13 ..... A-41
SP-17C A-47
SY-155A A-51
SV-123 ..... A-59

B. CIRCUIT BOARD DIAGRAMS

AC-104 ..... B-2
ADA-18 ..... B-6
CP-157A, CP-158, CP-171 ..... B-11
CP-172A, CP-172B, CP-173A, CP-173B B-12
DC-47 ..... B-14
DIO-10 ..... B-16
DR-139, HP-48 ..... B-18
KY-192 ..... B-22
LE-90A, LE-90B, LED-104 ..... B-26
MEM-40A B-28
PS-211 ..... B-31
RF-31, RM-77 ..... B-35
SP-13 ..... B-40
SP-17C B-45
SV-123 ..... B-49
SW-420, SW-426, SW-452, SW-453, SW-454 ..... B-52
SY-155A, VR-109 ..... B-56

C. SCHEMATIC DIAGRAMS

AC-104 ..... C-2
ADA-18 (1/2) C-7
ADA-18 (2/2) C-13
CP-157B C-21
CP-158 ..... C-23
CP-171 ..... C-25
CP-172A C-29
CP-172B C-31
CP-173A C-33
CP-173B C-35

DC-47 ..... C-37
DIO-10 ..... C-41
DR-139 ..... C-47
HP-48 ..... C-53
KY-192 ..... C-55
LE-90A C-63
LE-90B C-65
LED-104 ..... C-67
MEM-40A C-69
PS-211 ..... C-75
RF-31 ..... C-79
RM-77 ..... C-83
SP-13 ..... C-87
SP-17C C-95
SV-123 ..... C-99
SW-420 ..... C-105
SW-426 ..... C-109
SW-452
SW-453 ..... C-111
SW-454 ..... C-113
SY-155A (1/2) C-115
SY-155A (2/2) C-121
VR-109 ..... C-127
FRAME (1/4) C-129
FRAME (2/4) C-137
FRAME (3/4) C-143
FRAME (4/4) C-151

D. SEMICONDUCTOR PIN ASSIGNMENTS

E. REPLACEABLE PARTS
E-1. PARTS ORDERING INFORMATION E-1
E-2. EXPLODED VIEWS AND PARTS E-2
E-3. ELECTRICAL PARTS LIST E-27

SECTION 1
INSTALLATION

1-1. Packing

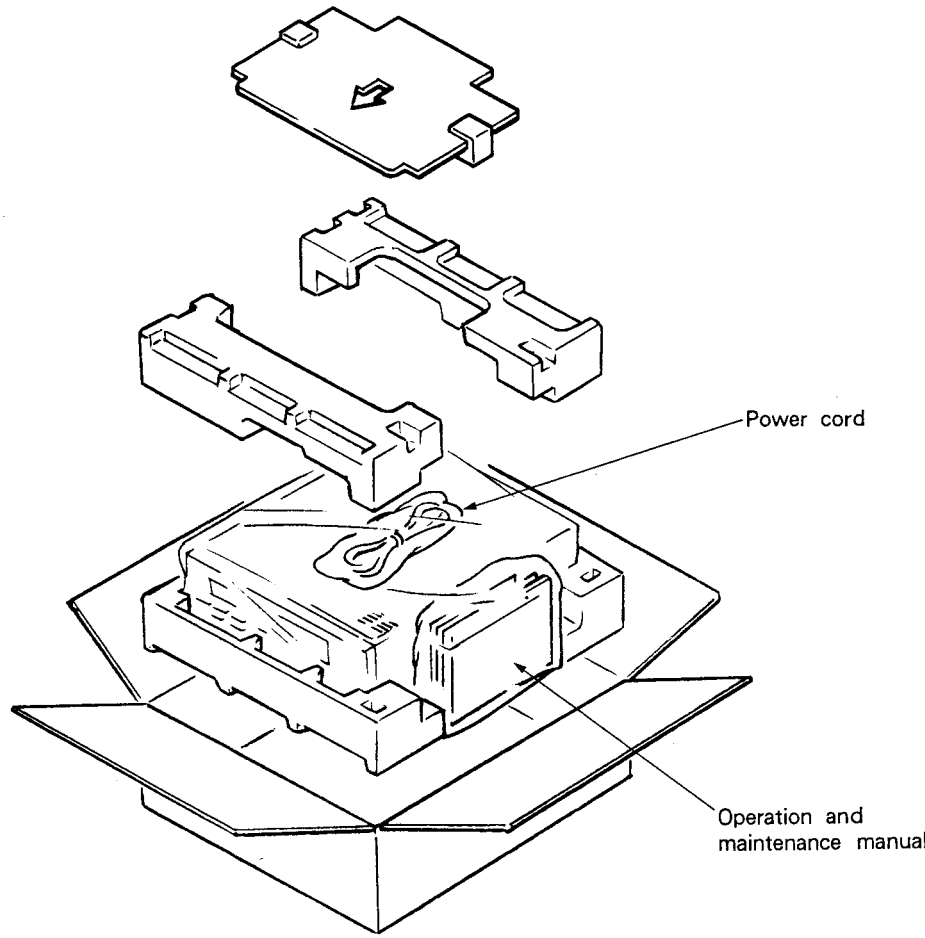

1-2. Installation Environment and Installation Space

Be sure to observe the following precautions including operation environment and installation space when you install the PCM-7050 Digital Audio Recorder.

1-2-1. Operating environment

1. Do not install the unit in a place subject to direct sunlight or strong light, excessive dust, and frequent vibrations. Also do not install the unit near intense electric or magnetic fields.
2. Give consideration to the air circulation of the installation site to prevent the temperature of the inside unit from rising.
3. The operating temperature inside the unit is 5℃ to 35℃ (41°F to 95°F). Do not install the unit in a place near heat sources.

1-2-2. Installation space

1. The outside dimensions of the unit is given in the figure on next page.
2. Be sure to install the unit with a clearance of at least 40cm (15.75″) between the wall and the rear surface of the unit for ventilation and easier maintenance.
3. When you use the unit on a desk, provide a clearance of at least 40cm (15.75″) above the upper surface of the unit for easier maintenance of the printed circuit board. On the other hand, when you mount the unit on a rack, you can insert or remove the printed circuit board by drawing the unit forward. Therefore, you do not have to provide the clearance over the upper surface of the unit.

External dimensions

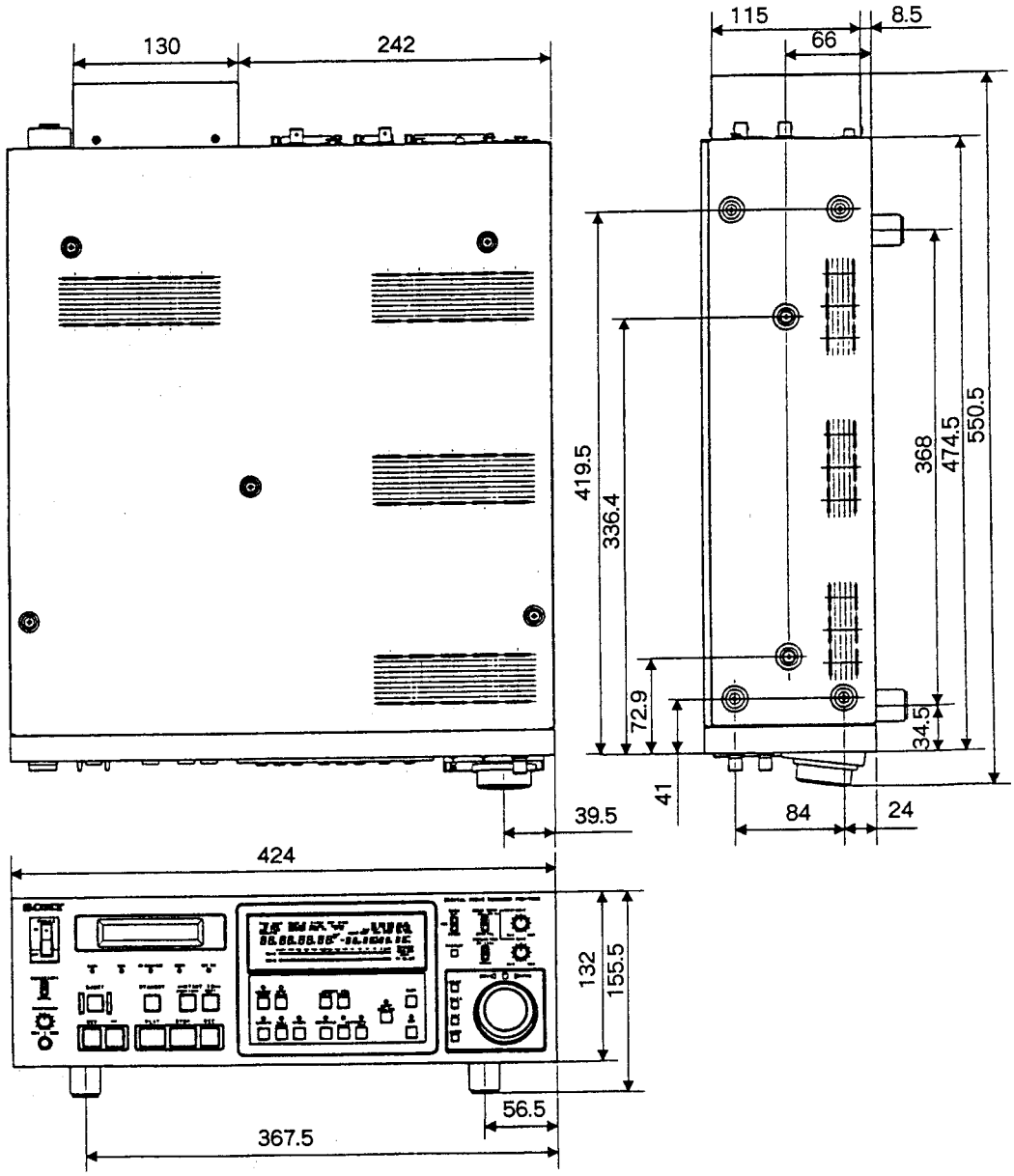

When mounted in a rack

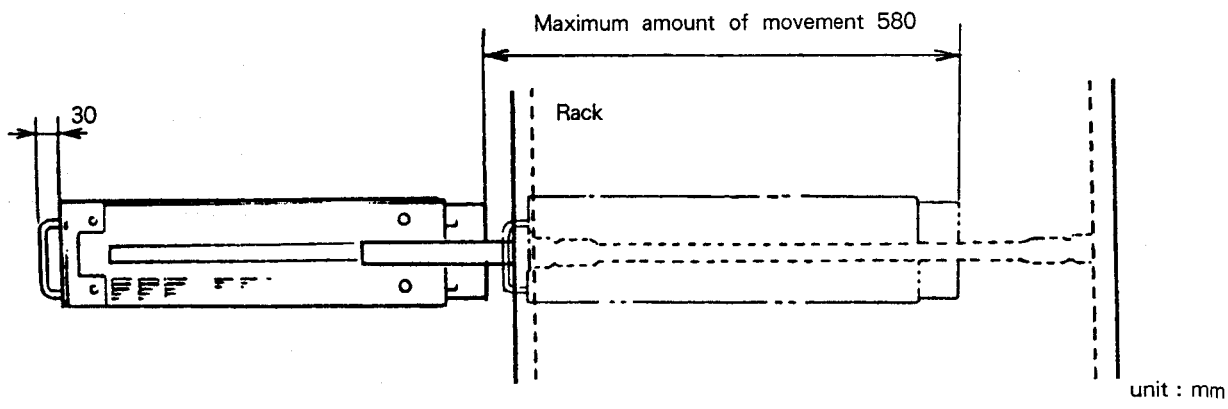

1-3. Rack mounting method

The PCM-7050 can be used together with the EIA 19 inch standard rack.

It is recommended to use the rail and handles below to install it in the rack.

Rail : Rack mount rail RMM-30 (option)
suitable for a rack 660-830mm (26~33 3/4 inches) long.

Handle : Rack mount adapter RMM-31 (option)

Note :

Please be sure to carry out the installation with two or more persons. If the PCM-7050 is not supported securely when being inserted onto the rack's rails, injury or damage can result.

Preparation

Remove the four legs of the PCM-7050.

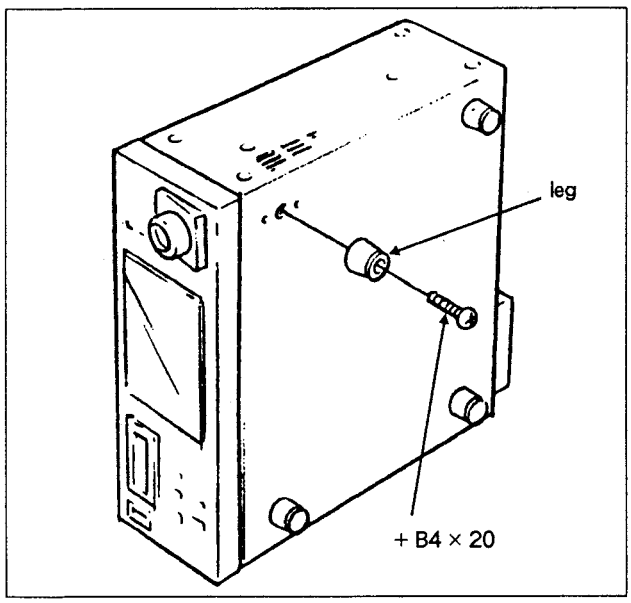

Rack mounting procedure (for RMM-30, RMM-31)

(1) Remove the inside rail from the RMM-30 bracket attachment rail.

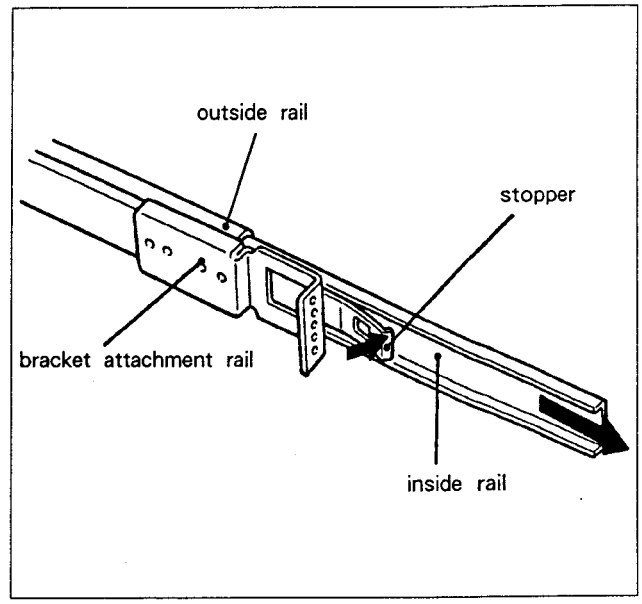

(2) Remove the side panel screws of the PCM-7050 (+B4 × 10, two places on the right and left respectively) and remove the inside rail as in the illustration. (Use the removed screws (+B4 × 10) for the installation.)

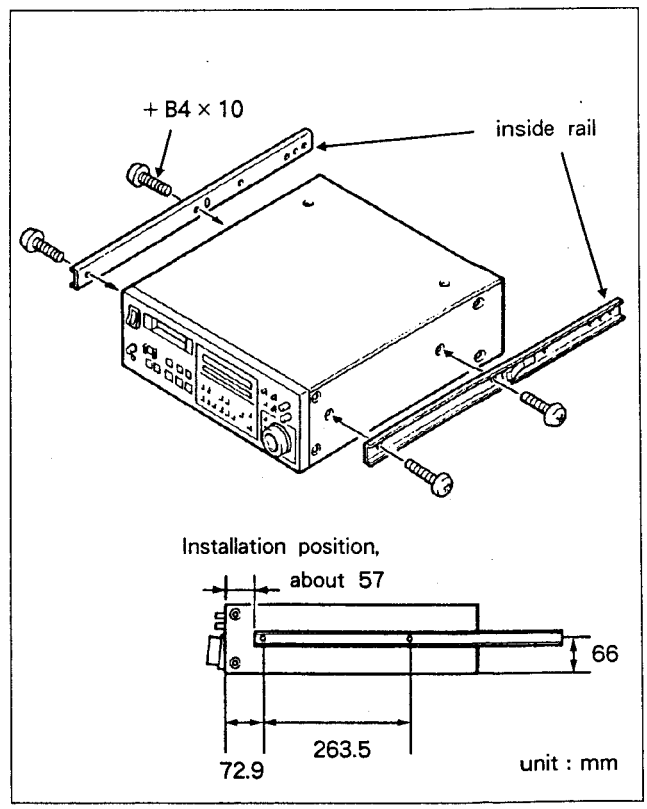

(3) Remove the side panel screws (+B4×6) of the PCM-7050 and install the RMM-31 handles as illustrated.
(To install, use the screws (+B4×14) that come with the RMM-31.)
Note : Save the screws removed so they can be used later.

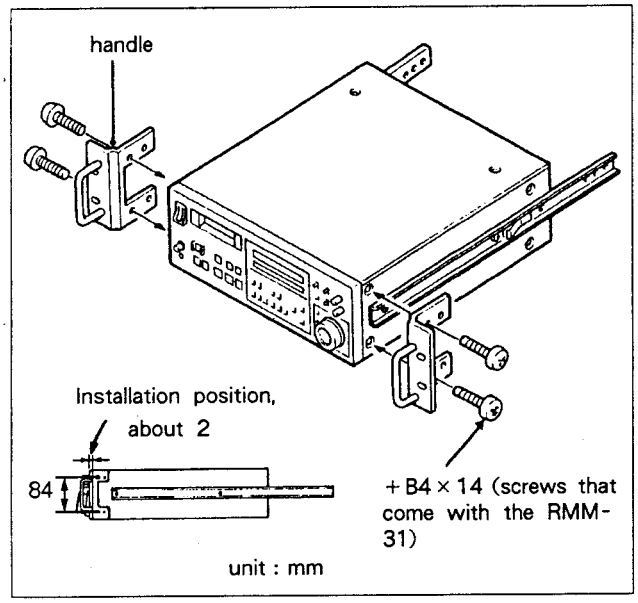

(4) Temporarily attach the outside rail of the RMM-30 bracket attachment rail to the rack. (To install, use the screws (+B5×8) that come with the RMM-30.)

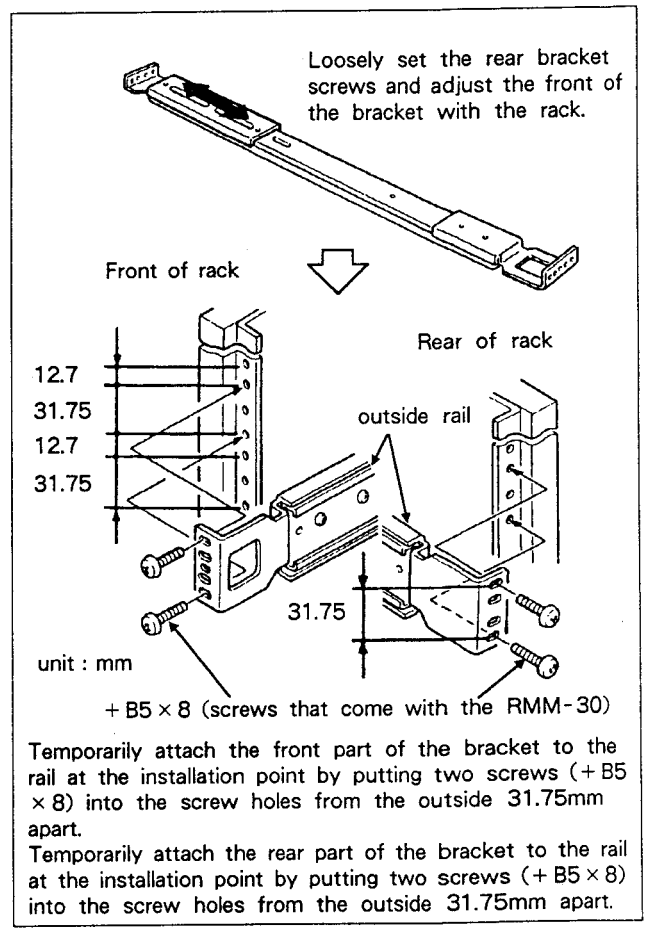

Temporarily attach the front part of the bracket to the rail at the installation point by putting two screws (+B5×8) into the screw holes from the outside 31.75mm apart.
Temporarily attach the rear part of the bracket to the rail at the installation point by putting two screws (+B5×8) into the screw holes from the outside 31.75mm apart.

(5) While pressing the stoppers on the inside rails, insert the PCM-7050 on the outside rails and push to the rear of the rack.

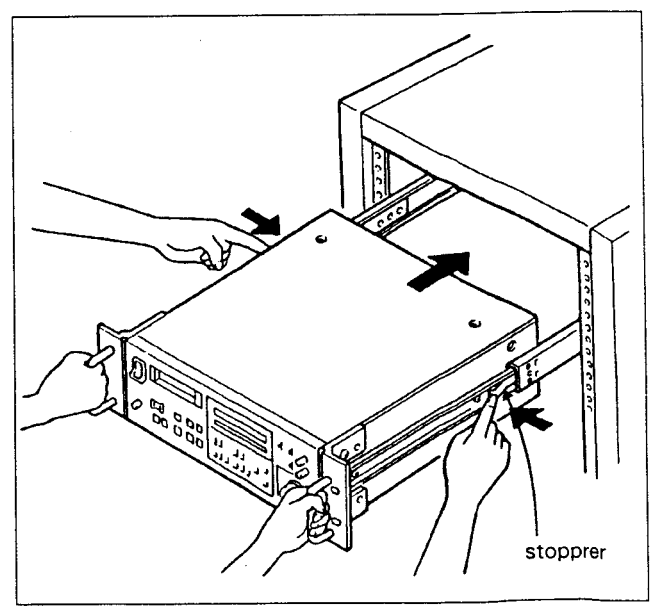

(6) Firmly tighten the rear bracket screws.

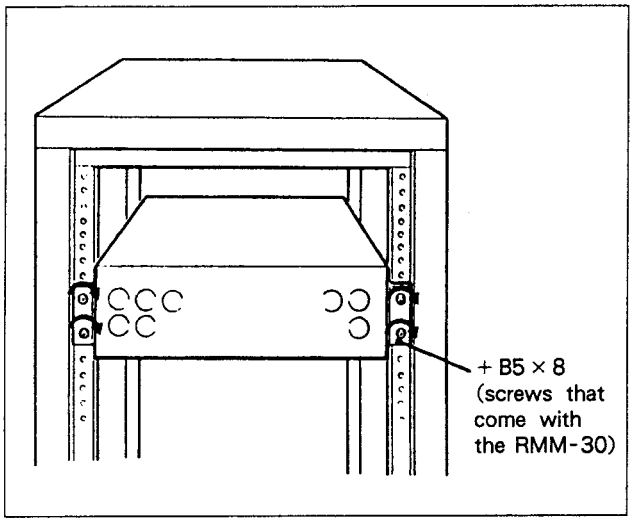

(7) Pull the PCM-7050 out about 20cm and firmly tighten the front bracket screws.

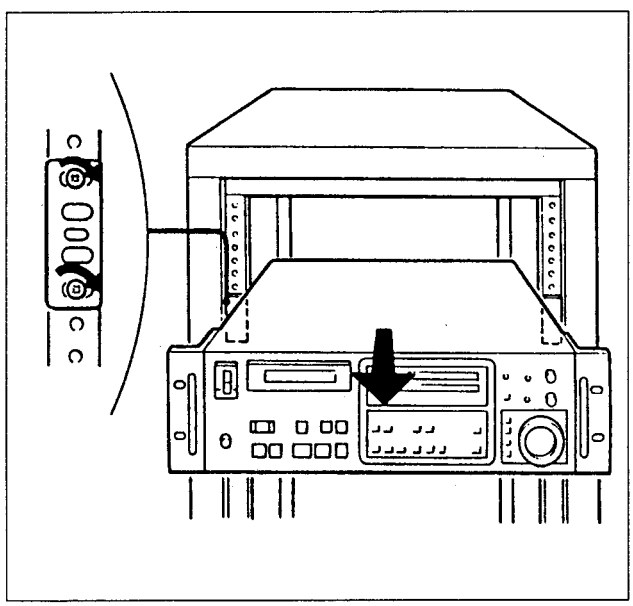

(8) Push the PCM-7050 into the rack and attach the handles to the rack with the screws (+ RK5 × 16) and decorative washers that come with the RMM-30.

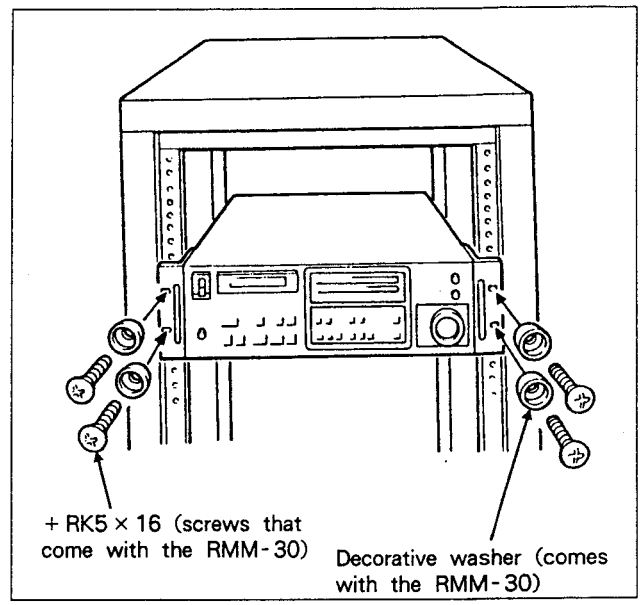

1-4. Installation of the DABK-7030, DABK-7033, and DABK-7055

The installation of the DABK-7030, DABK-7033, and DABK-7055 is described below.

1-4-1. DABK-7030 Installation Procedure

The DABK-7030 comprises the following :

TC-58 (UC) or	
TC-58P (EK) board	: 1
TC panel	: 1
Screws (+ PWH3 × 6)	: 2
Nylon rivets	: 2
Flexible card cable (30P)	: 1

Initial preparation

Remove the unit's top panel (secured by four + B4 × 6 screws) and the bottom panel (secured by five + B4 × 6 screws).

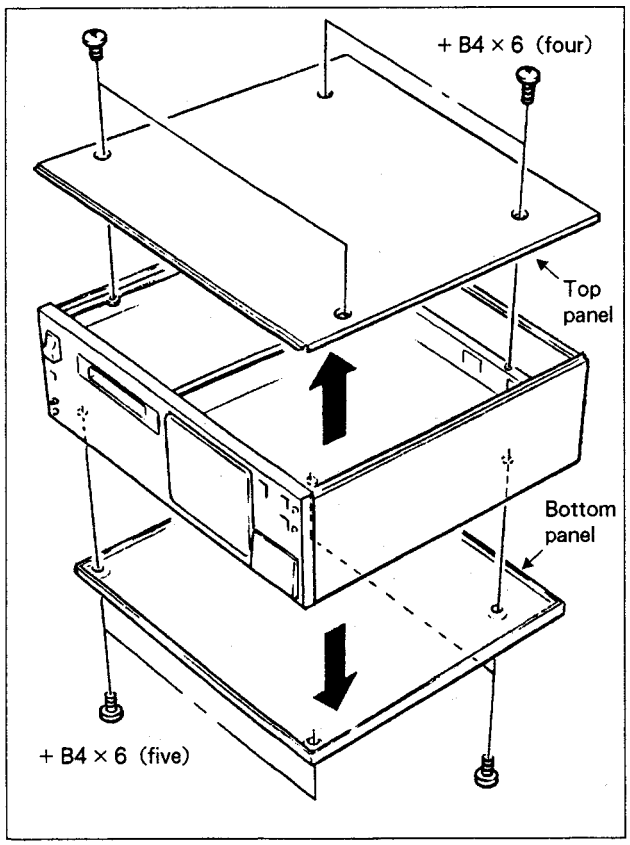

Note : Before installing the DABK-7050, turn off the unit's POWER switch.

1) Flexible card cable (30P) connection to the SY-155A board

(1) Remove the ADA-18 board's two screws (+ B3 × 5).

(2) Release the PCB holder's lock and open the ADA -18 board as shown by the arrow.

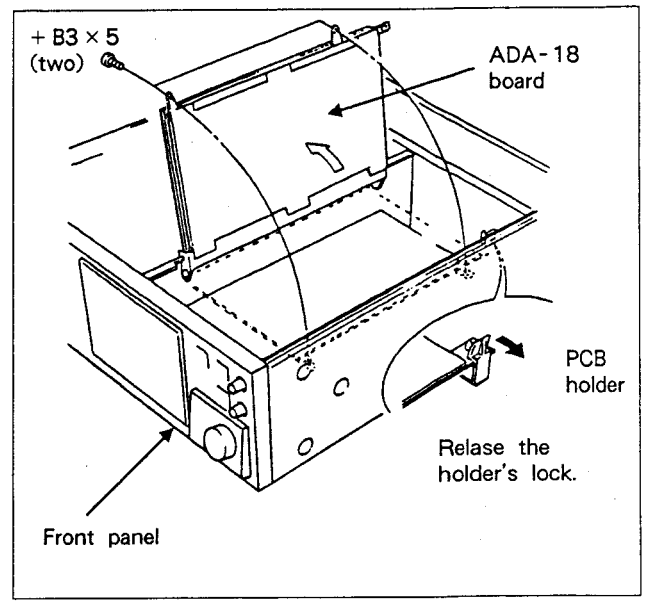

(3) Remove the SP-13 board's screw (+ PWH3 × 6).

(4) Release the PCB holders' locks and open the SP -13 board as shown by the arrow.

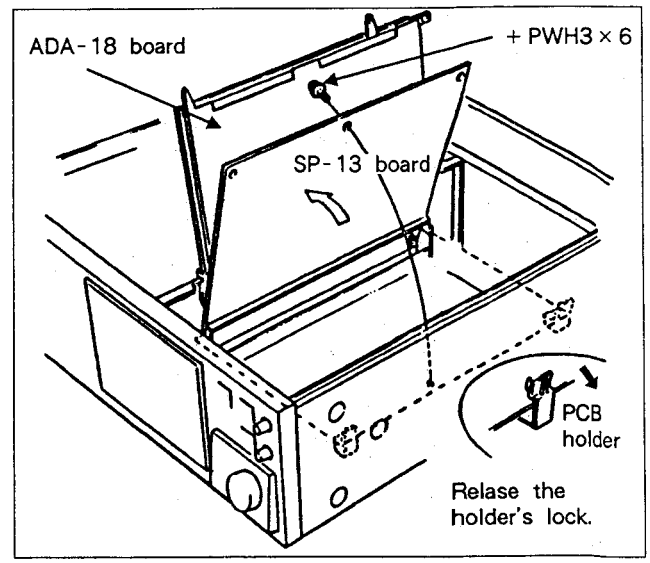

(5) Insert the flexible card cable (30P) through the chassis hole. Keep inserting the cable until it locks into the CN1 connector on the SY-155A board.

Note : Take care to insert the flexible card of the contact/incontact side.

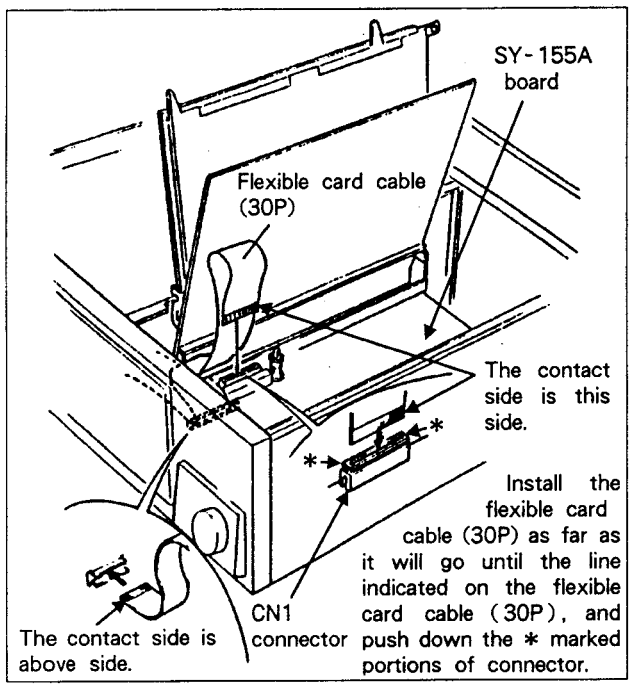

(6) Close the SP-13 board until the two PCB holders lock. Then tighten the screw (+ PWH3 × 6) removed in step (3).

(7) Close the ADA-18 board until the PCB holder locks. Then tighten the two screws (+ B3 × 5) removed in step (1).

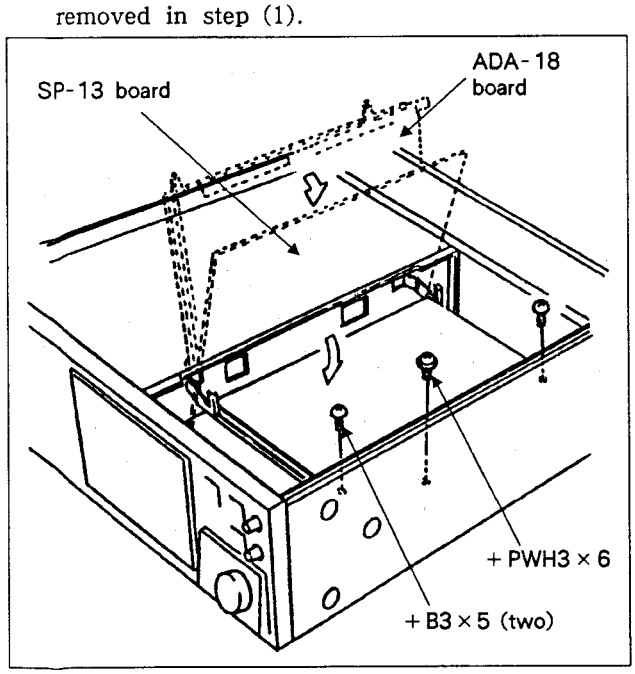

2) TC-58 (UC) or TC-58P (EK) board installation

(1) Lay the unit so that the bottom side is in front of you.

(2) Secure the flexible card cable with the two cable clips.

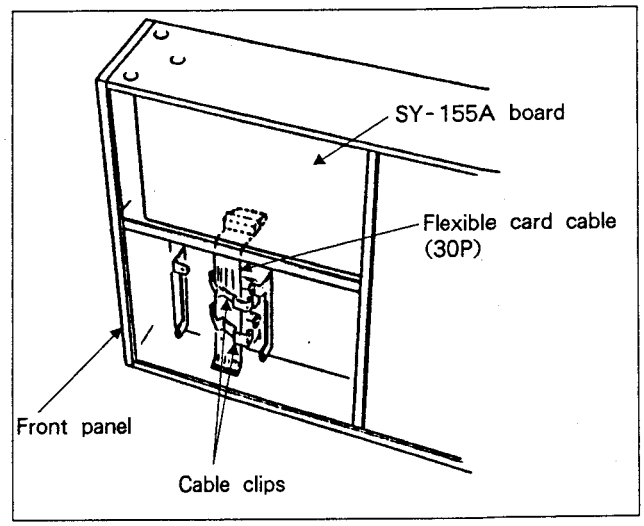

(3) Fasten the TC-58 (UC) or TC-58P (EK) board to the chassis with the two nylon rivets.

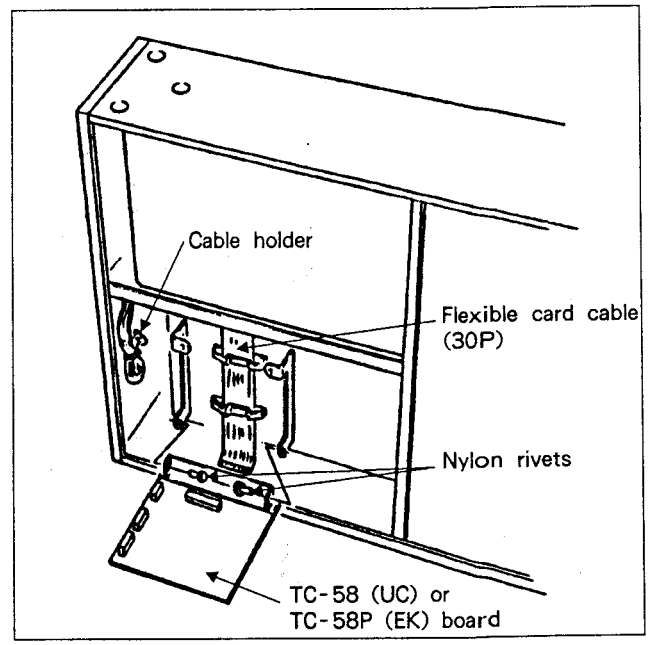

(4) Connect the flexible card cable (30P) to the CN2 connector on the TC-58 (UC) or TC-58P (EK) board.

(5) Connect the 4P, 5P, and 6P harnesses held by the cable holder to CN1 (5P), CN3 (4P), and CN4 (6P) respectively on the TC-58 (UC) or TC-58P (EK) board.

(6) Close the TC-58 (UC) or TC-58P (EK) board as shown by the arrow.

(7) Secure the TC-58 (UC) or TC-58P (EK) board to the chassis with the two screws (+PWH3 × 6).

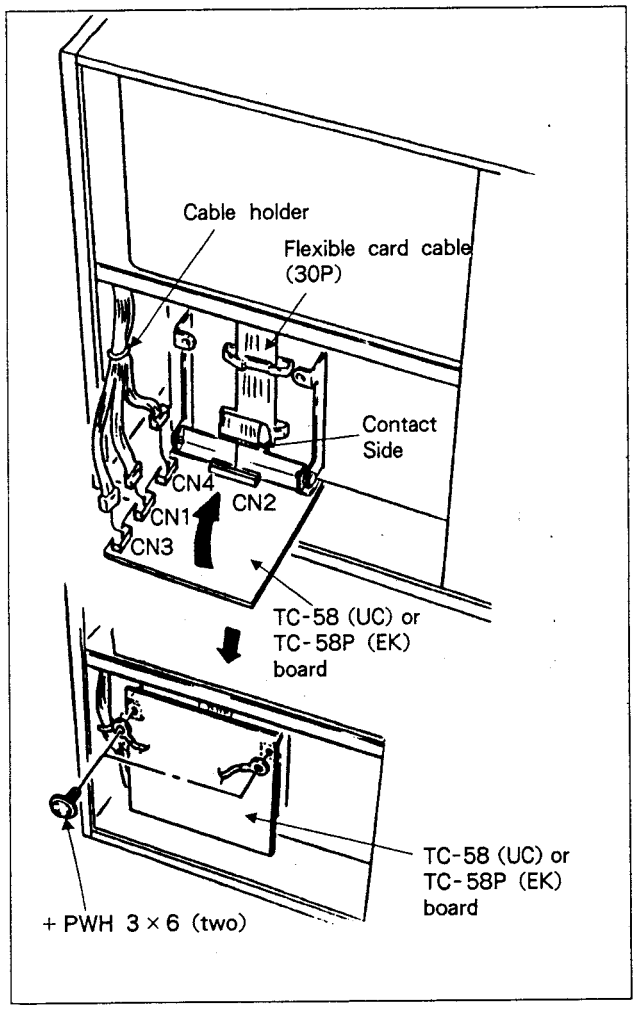

3) Installation of Connector Panel to TC Panel

(1) Remove the blind plate from the Connector Panel.

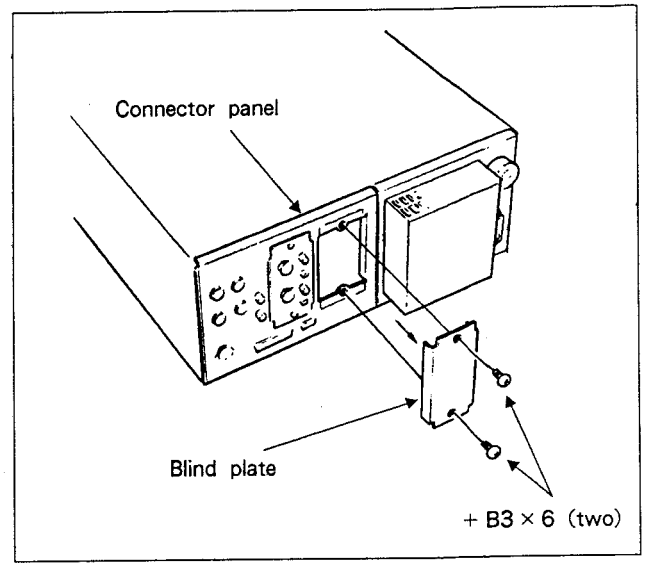

(2) Install the TC panel on the connector panel (where the blind Plate was removed) and secure it with the +B3 × 6 screws removed in step (1).

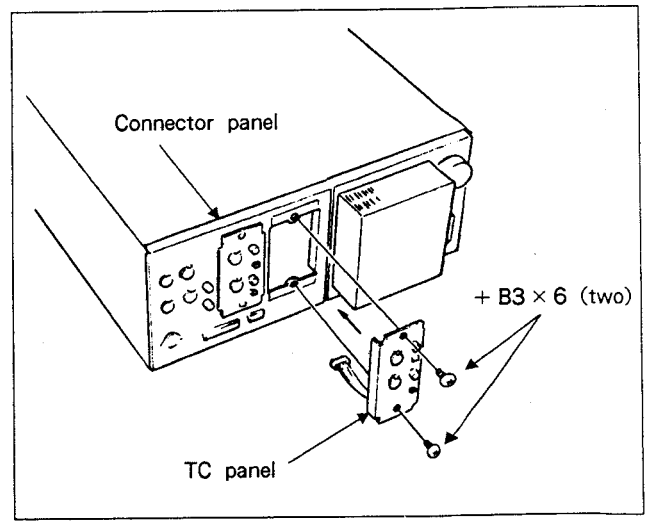

(3) Remove the two connector panel screws (+B3×5) and open the connector panel as shown by the arrow.

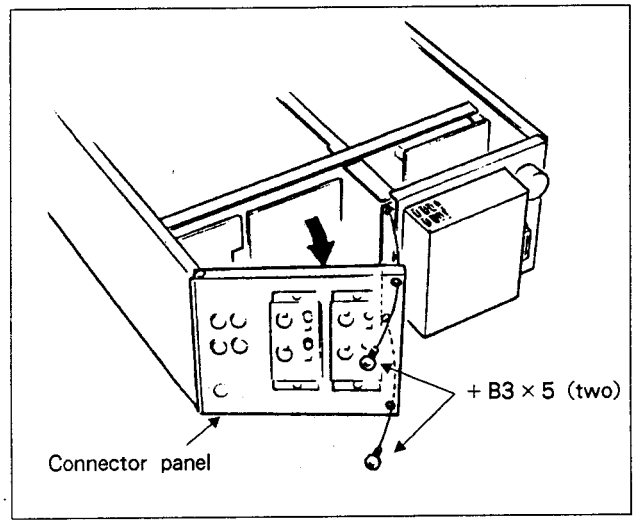

(4) Connect the TC panel's harness to the CP-171 board's CN10 connector (black). Secure the harness with the four purse locks shown in the figure below.

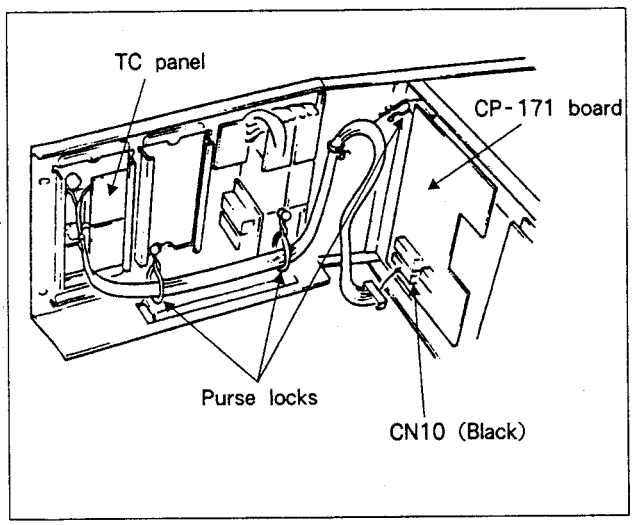

(5) Close the connector panel.

(6) Fasten the connector panel to the chassis with the two +B3×5 screws removed in step (3).

(7) Re-install the top panel (with the four +B4×6 screws) and bottom panel (with the five +B4×6 screws) on the unit.

4) Post-Installation Check

After installing the DABK-7030, do the following check.

1. Video synchronization signal input check procedure

(1) From the video synchronization signal generator, input the signal to the TC panel's REF VIDEO INPUT terminal.

Note : The unit's video synchronization signal frequency setting must match the input signal. Refer to the menu operation in the Operation Manual.

(2) Set the TC panel's 75 ohm termination ON/OFF switch to ON.

(3) Set the SYNC switch on the front panel to VIDEO.

(4) Make sure the VIDEO display on the front panel's display is lit.

(5) Then set the 75 ohm termination ON/OFF switch to OFF.

2. Time code I/O check

(1) Connect the INPUT and OUTPUT terminals of the TIME CODE terminal on the TC panel.

(2) Play the tape containing the time code.

(3) Press the DISPLAY key on the front panel to display the EXT TIME CODE on the display's work area.

(4) On the display, make sure the tape time area's time code display matches the work area's time code display.

1-4-2. DABK-7033 Installation Procedure

The DABK-7033 comprises the following :

IF-283 board	: 1
Board supporter	: 3
Harness with D-SUB connector	: 1
D-SUB connector screws	: 2
ROM	: 2
Sample Disk	: 1

Initial preparation

Remove the top panel by removing the four + B4 × 6 screws. Remove the top panel as shown by the arrow.

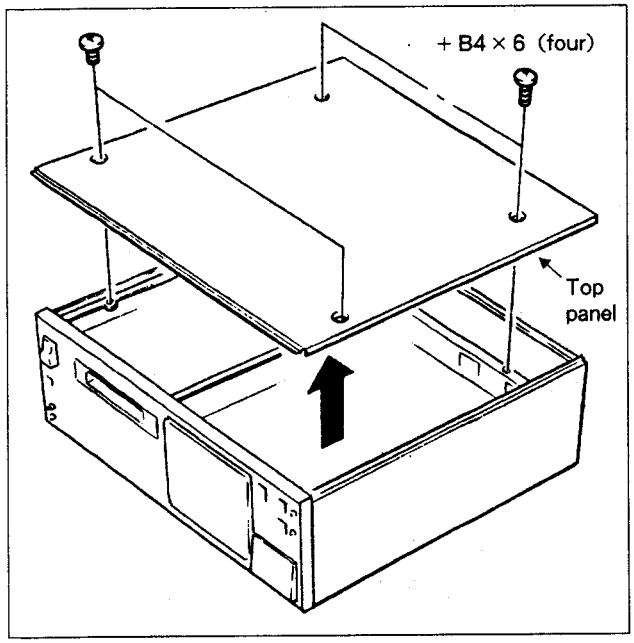

Note : Before installing the DABK-7033, turn off the unit's POWER switch.

1) Installation of Harness with D-SUB connector to the connector panel

(1) Remove the D-SUB blind plate from the connector panel.

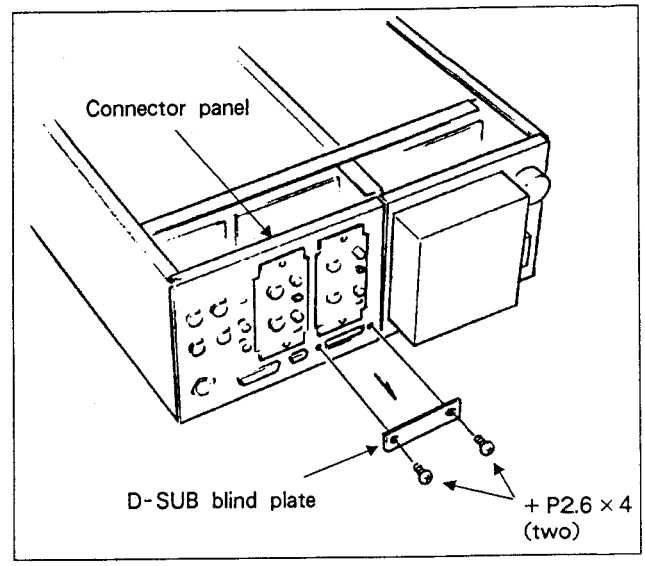

(2) Install the harness with D-SUB connector on the connector panel (where the D-SUB blind plate was removed) with the two D-SUB connector screws.

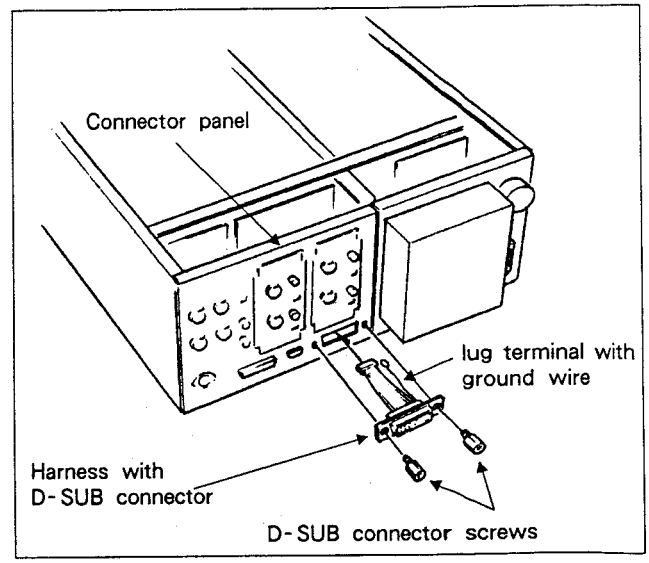

2) IF-283 board installation on the RM-77 board

(1) Remove the two + B3 × 5 screws and open the connector panel as shown by the arrow.

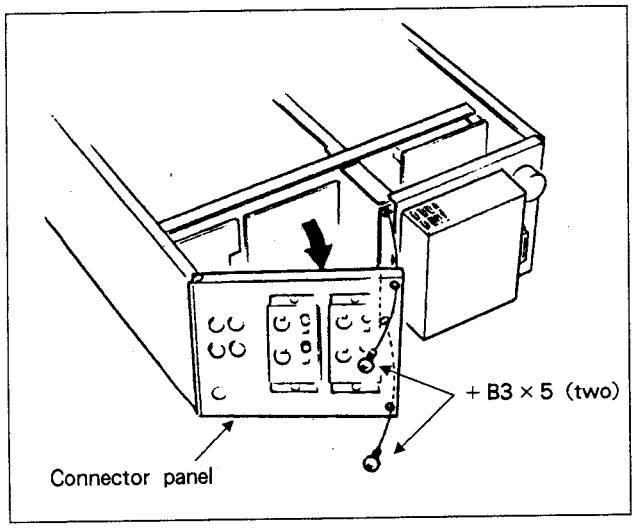

(2) Insert the three board supporters into the IF-283 board as shown in the figure below.

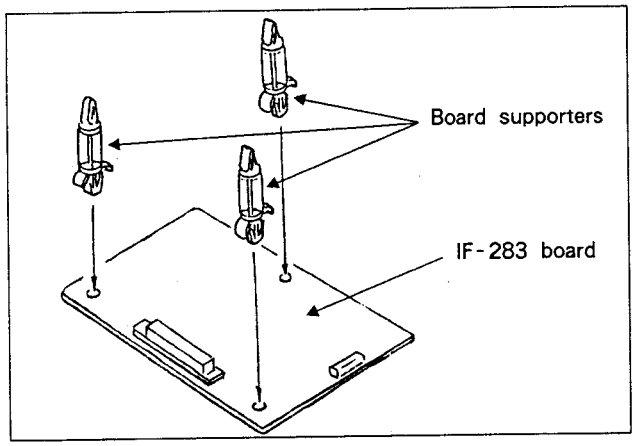

(3) Mount the IF-283 board to the RM-77 board and push it in until the board supporters lock.

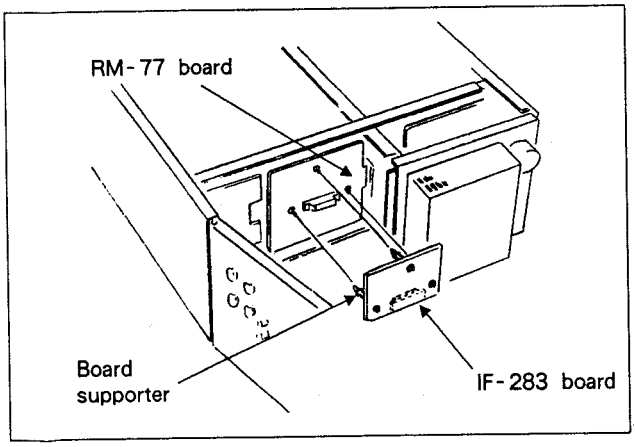

(4) Connect the harness with D-SUB connector to the IF-283 board's CN2 connector (yellow). Connect the harness by securing it with the four purse locks.

(5) Remove the screw (+ PWH3 × 6) that the stopping on the RM-77 board (A Side board address A -1) and install the harness together with the ground wire with the lug terminal provided with the IF-238 board.

(6) Remove the screw (+ B3 × 6) holding the frame ground wire of the D-SUB 9 pin (REMOTE 9P). Secure the lug terminal with ground wire of the harness with the D-SUB connector with a purse lock, and install it together with the removed frame ground wire with a screw (+ B3 × 6).

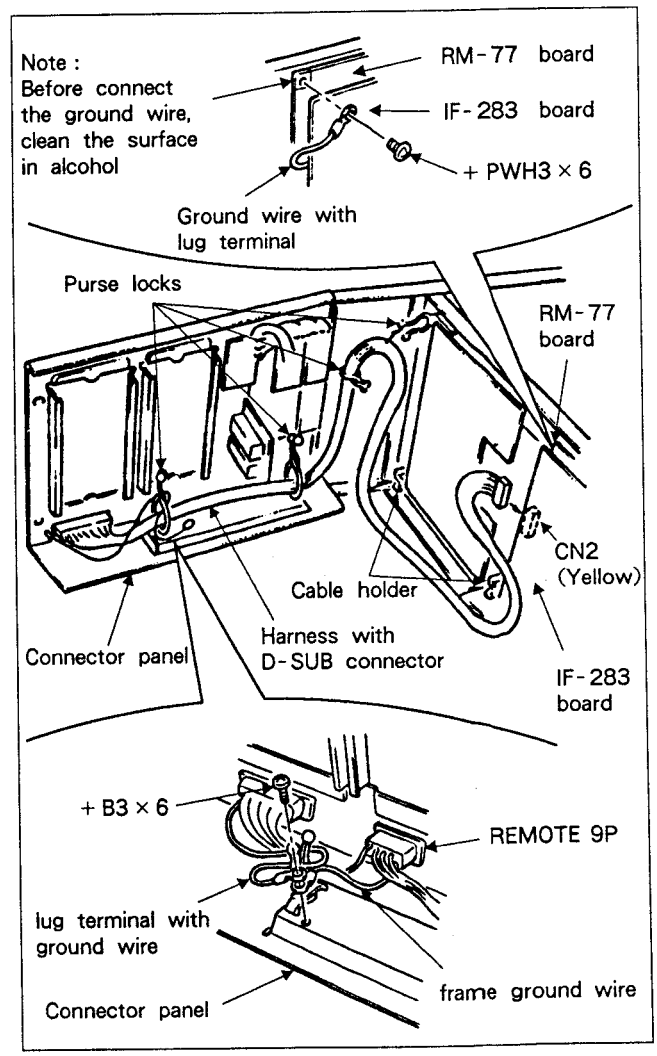

(7) Close the connector panel.

(8) Fasten the connector panel to the chassis with the two + B3 × 5 screws removed in step (1).

3) ROM Replacement

(1) Remove the ADA-18 board's two +B3×5 screws.

(2) Release the PCB holder's lock and open the ADA -18 board as shown by the arrow.

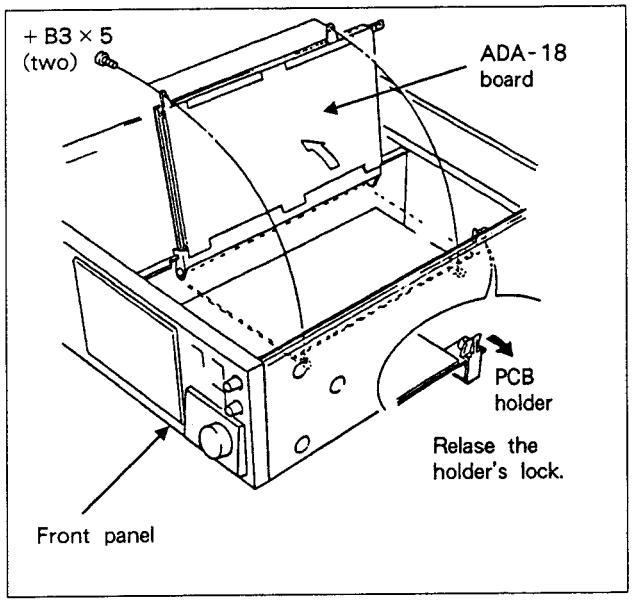

(3) Remove the SP-13 board's screw (+PWH3×6).

(4) Release the PCB holders' locks and open the SP -13 board as shown by the arrow.

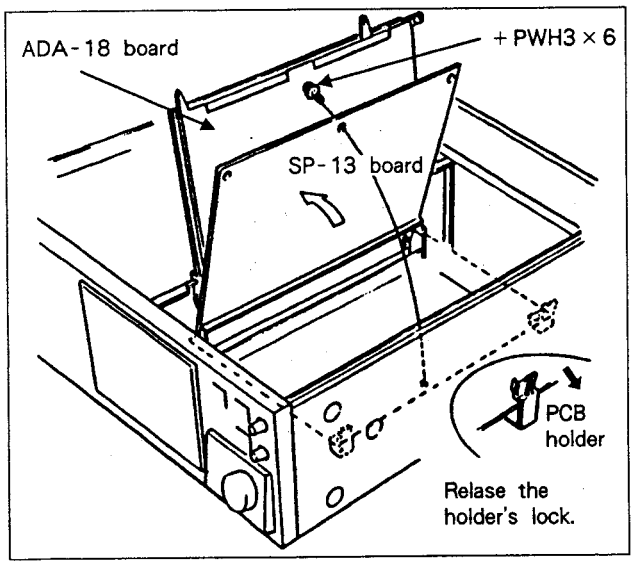

(5) Remove the DIO-10 board from the SY-155A board.

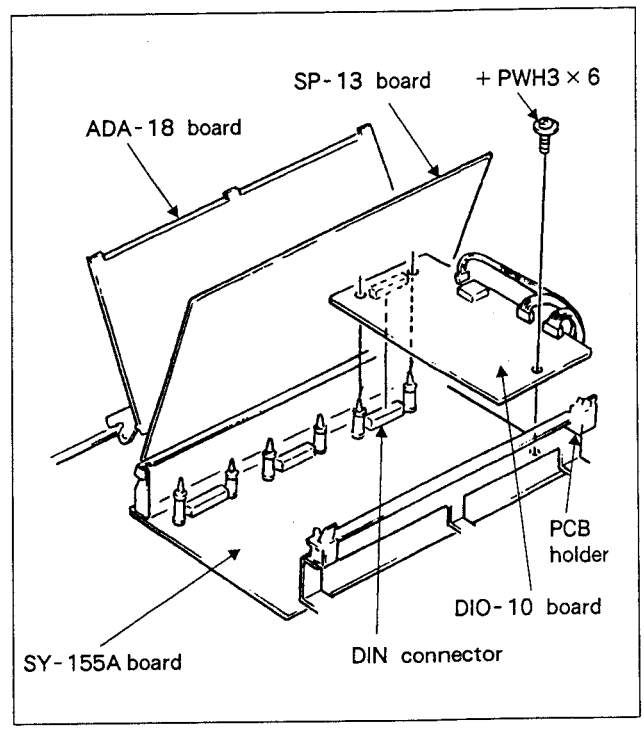

(6) Remove the ROM SYC3V *.* (board adress C-3) on the SY-155A board and install the ROM (IFC3V *.*) that goes with the DABK-7033.

(7) Remove the ROM SYC4V *.* (board adress C-4) on the SY-155A board and install the ROM (IFC4V *.*) that goes with the DABK-7033.

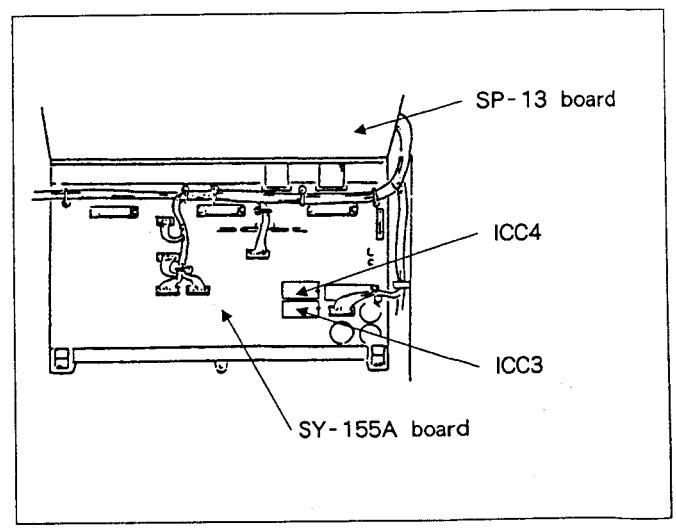

(8) Install the DIO-10 board on the SY-155A board.
(9) Close the SP-13 board until the two PCB holders lock.
(10) Fasten the SP-13 board to the board guide with the + PWH3 × 6 screw that was removed in step (3).
(11) Close the ADA-18 board until the PCB holder locks.
(12) Fasten the ADA-18 board to the chassis with the two + B3 × 5 screws that were removed in step (1).
(13) Install the top cover on the unit with the four + B4 × 6 screws.

1-4-3. DABK-7055 Installation Procedure

The DABK-7055 comprises the following :

MEM-40C board : 1
Screw (+ PWH3 × 6) : 1

Initial preparation

Remove the unit's top panel.
(Refer to the 1-4-1. DABK-7030 installation procedure.)

Note : Before installing the DABK-7055, turn off the unit's POWER switch.

1) Installation of MEM-40C board to SY-155A board

(1) Open the ADA-18 board and SP-13 board. (Refer to the 1-4-1. DABK-7030 installation procedure.)
(2) Remove the SP-17C board from the SY-155A board. (The board supporters are located in two places. One + PWH3 × 6 screw.)

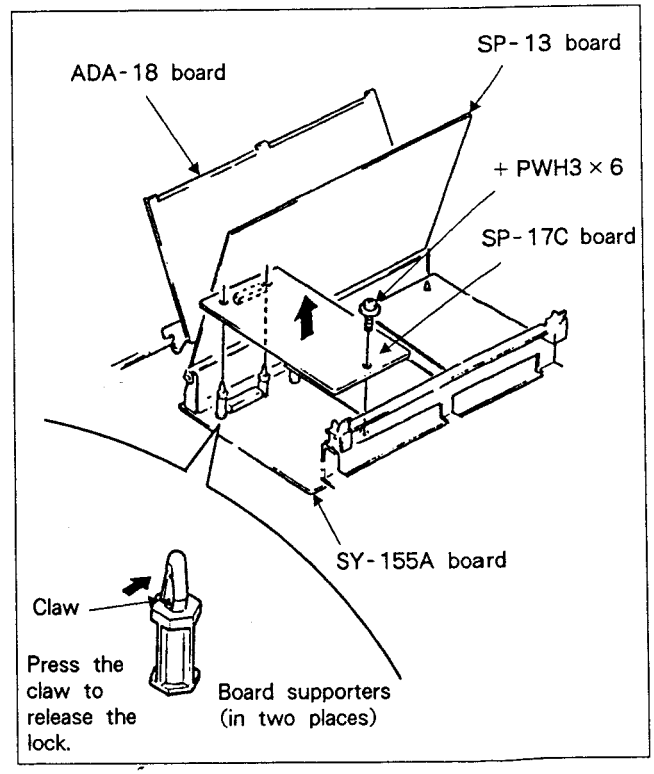

(3) Insert the MEM-40C board's DIN connector into the SY-155A board's DIN connector. Insert the MEM-40C board until the SY-155A board's board supporters lock.

(4) Fasten the MEM-40C board to the SY-155A board's SY bracket the + PWH3 × 6 screw.

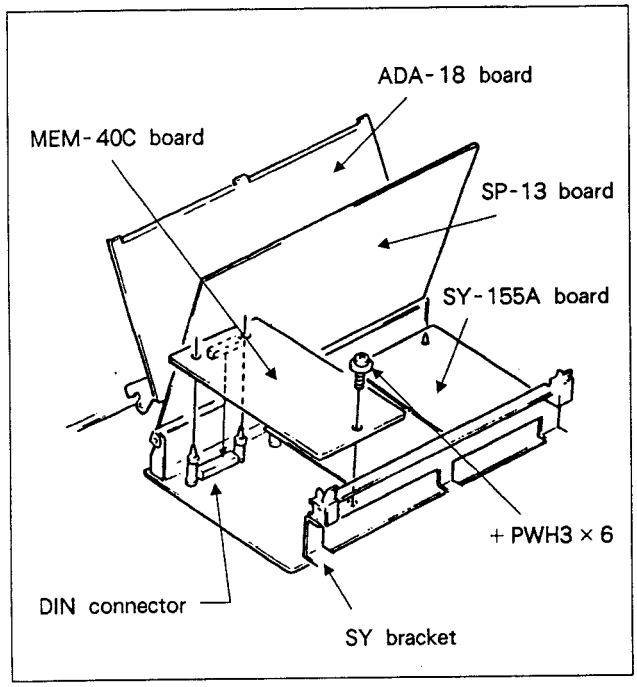

(5) Close the SP-13 board and ADA-18 board. (Refer to the 1-4-1. DABK-7030 installation procedure.)

(6) Install the top panel on the unit and secure it with the four + B4 × 6 screws.

2) Post-Installation Check

After installing the DABK-7055, do the following check :

(1) Open the SERVICE menu. (Simultaneously pressing the STOP, DISPLAY, and SET keys on the front panel.)

(2) Open the TEST menu.

① While pressing the MENU key, turn the dial counterclockwise to display the following :
[tESt] cLoSE

② While pressing the DATA key, turn the dial until "oPEn" is displayed. Then press the SET key.

③ While pressing the MENU key, turn the dial clockwise to display the following :
[iS_Ed] cLoSE

④ While pressing the DATA key, turn the dial until "oPEn" is displayed. Then press the SET key.

(3) While pressing the MENU key, turn the dial clockwise to display the following :
Edit tESt

(4) Press the SET key and check if "noError" is displayed about 20 seconds later.

(5) Close the SERVICE menu. (Simultaneously press the STOP, DISPLAY, and SET keys.)

1-5. Initial Settings of the Board's Switches and Volumes

The switch and volume settings required for level schedule changes (ADA-18 board) and fader start/stop procedure changes (RM-77 board) are described below.

Note : Do not touch any switches and volumes other than those specified below.

1-5-1. Level schedule change (ADA-18 board)

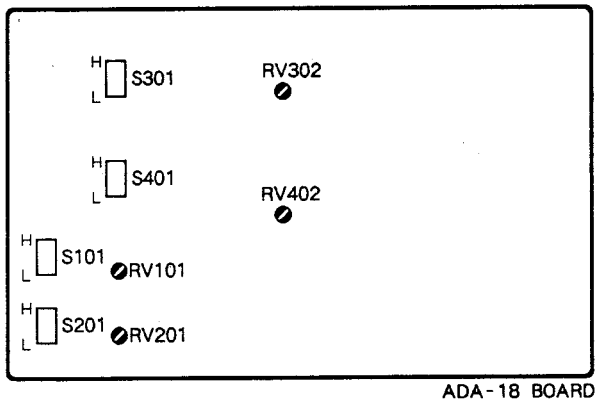

ADA-18 BOARD
COMPONENT SIDE
BOARD No. 1-637-267-11

(1) If the standard signal level used is small (around −20dBs), do the following :

Switchover the S101, S201, S301, and S401 switches in correspondence to the analog audio I/O signal's standard signal level.

This is to be used if the standard level is set low, at around −20dBs.

If all the switches are set to H, the +4dBs input signal will be displayed as −20dB on the level meter.(Setting upon factory shipment.)

If all the switches are set to L, the −20dBs input signal will be displayed as −20dB on the level meter.

(2) Level schedule change

Upon factory shipment, the RV101, RV201, RV301, and RV401 volumes are set to the level schedule (+4dBs input → 20dB display → 4dBs output).

To change the above volumes' level schedule, adjust the volumes as described below.

First set the ANALOG AUDIO INPUT level adjustment knob (CH1 and CH2 on the front panel) to the center position.

RV101 and RV201 input level adjustment

For RV101, adjust the CH1 input level.When it is turned clockwise, the level will increase.

For RV201, adjust the CH2 input level.When it is turned clockwise, the level will increase.

The level setting (+4dBs = −20dB) upon factory shipment has a variable range of +8/−14dB for RV101 and RV201.

RV302 and RV402 output level adjustment

For RV302, adjust the CH1 output level.When it is turned clockwise, the level will increase.

For RV402, adjust the CH2 output level.When it is turned clockwise, the level will increase.

The level setting (−20dB = +4dBs) upon factory shipment has a variable range of +4/−12dB.

1-5-2. Fader Start/Stop Change Procedure (RM-77 Board)

The following two methods can be used for tape transport control with the fader :

1. Start the tape transport by raising the fader and stop it with the STOP key.Or, start the tape transport with the START key and stop it with the STOP key.
2. Start the tape transport by raising the fader and stop it by lowering the fader.

Select one of the above methods with SW1.

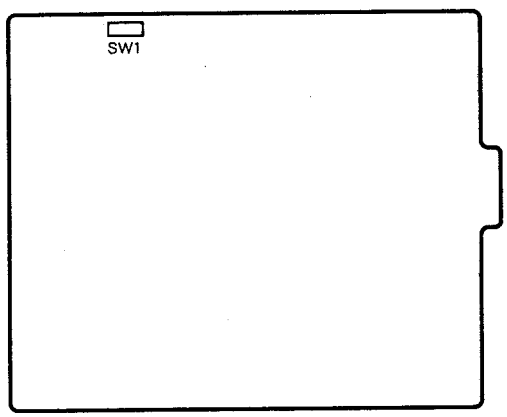

RM-77 BOARD
COMPONENT SIDE
BOARD No. 1-637-272-11

Setting upon factory shipment : The start and stop are independent.

Pin 1 of the 8-pin remote terminal is dedicated to the PLAY command.The fader start can be done with an external fader (mixer).Pin 2 is dedicated to the STOP command.

When the switch is set, the setting will apply to both start and stop.

From pin 1 of the 8-pin remote terminal, the PLAY and STOP commands will be input alternately.This allows an external fader (mixer) to perform fader start and fader stop.The signal from of the 8-pin remote terminal's pin 1 will thereby change as follows :

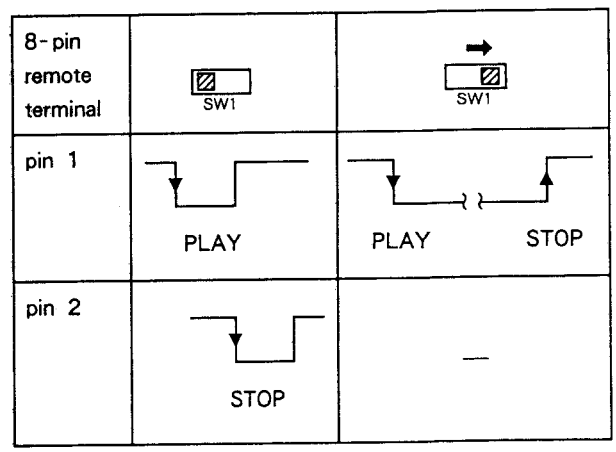

SECTION 2
SERVICE INFORMATION

2-1. Removal of Boards and Major Mechanical Parts

Top panel removal

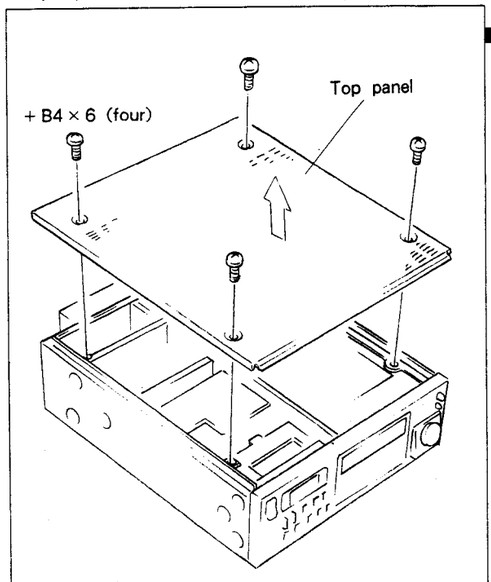

Removal of front panel assembly

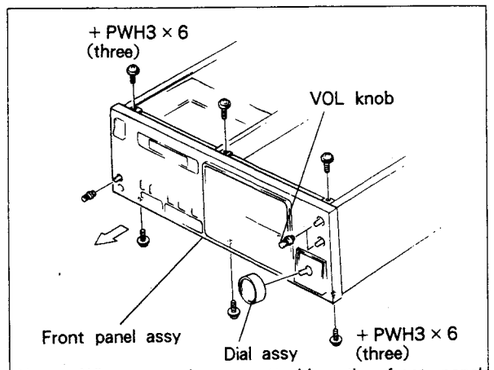

Note : • When removing or attaching the front panel assembly, please do it when the cassette compartment has finished ejecting or when the cassette holder has finished lowering.
• Refer to the instructions "2-4-1. Installation position of the panel and cassette compartment" for installing the front panel asseembly.

DC-47 board removal

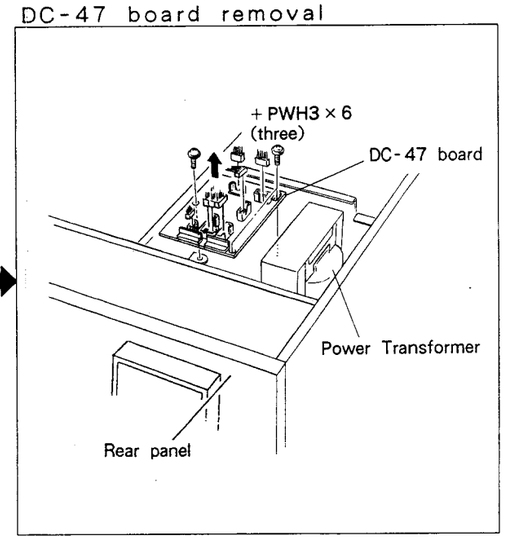

Opening the ADA-18 board

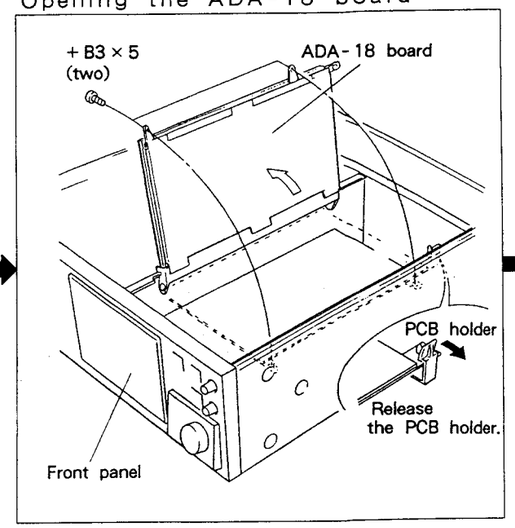

Removal of KY-192, HP-47, VR-109, LED-104, and SW-420 boards

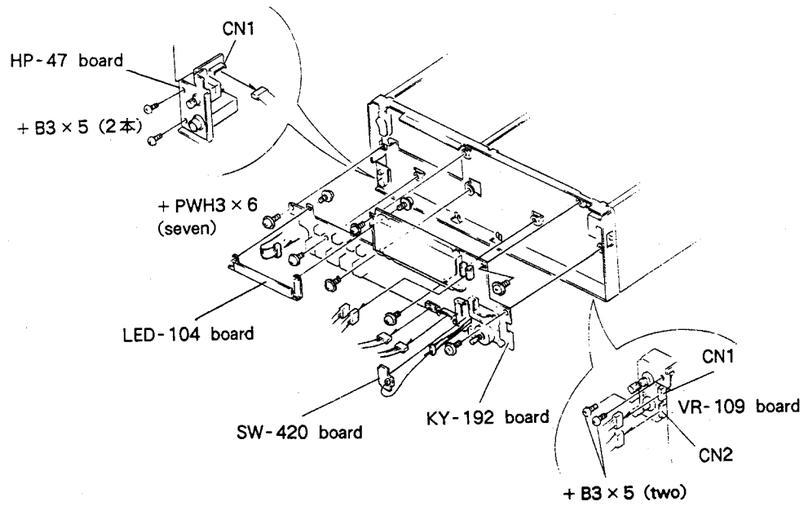

Fuse replacement

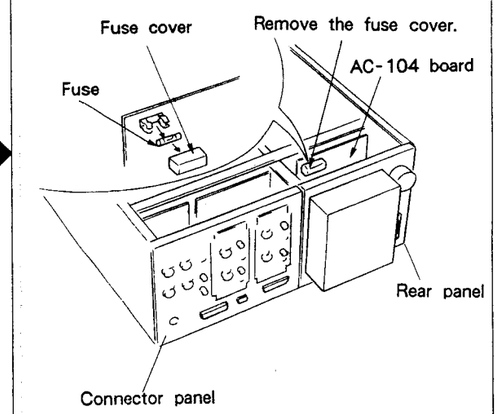

ADA-18 board removal

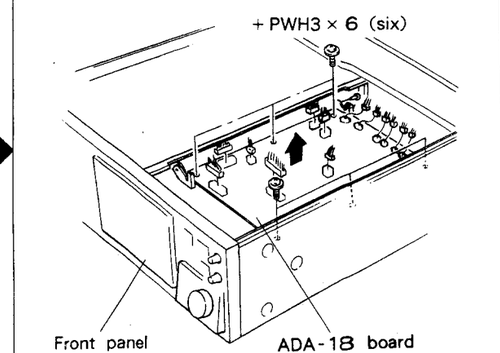

Opening the SP-13 board

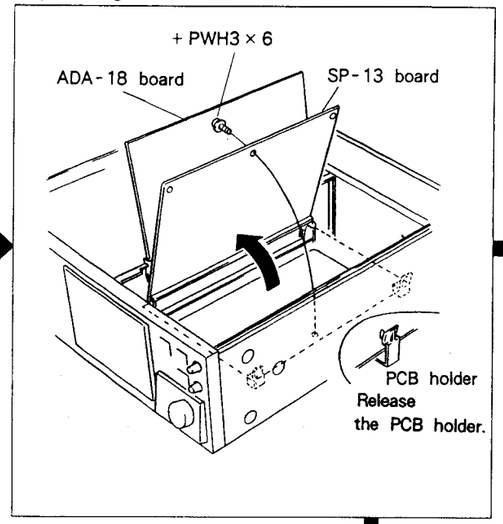

MEM-40A, SP-17C or MEM-40C (option) board removal

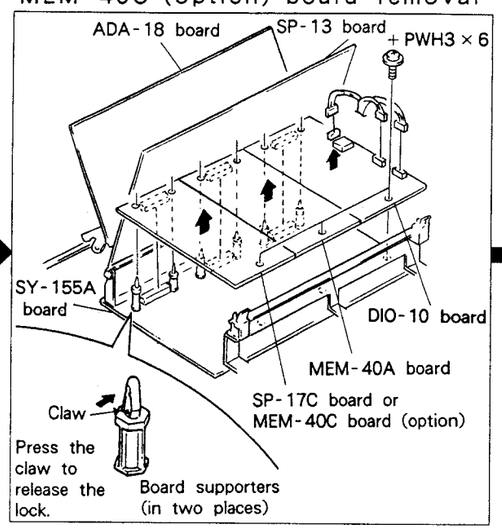

SY-155A board removal

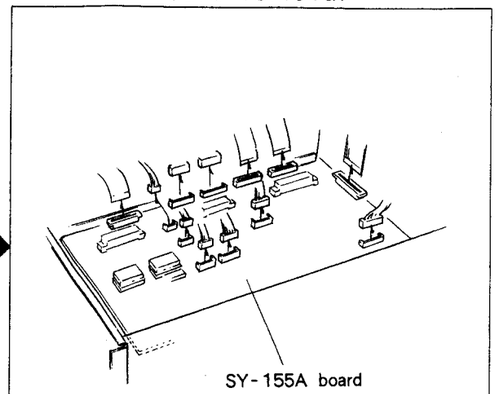

Remove the SY-155A board from the bottom plate side.

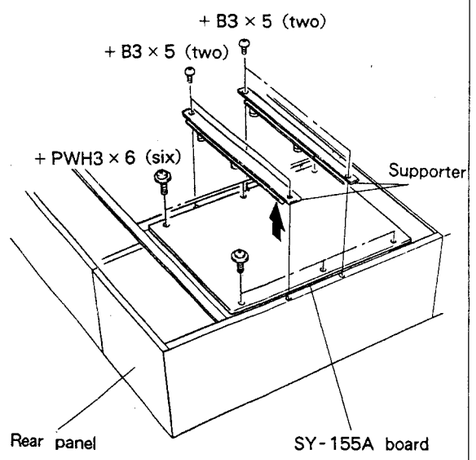

Bottom panel removal

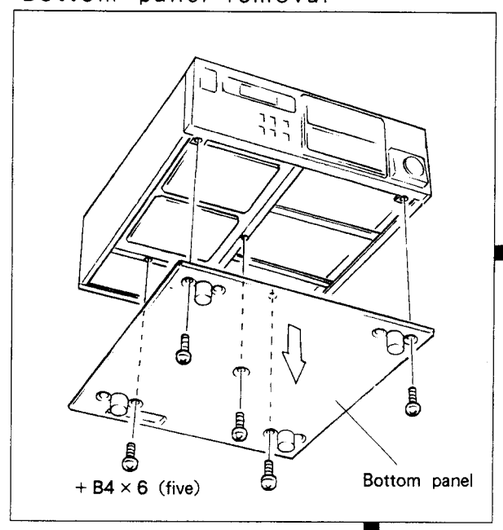

PS-211 board removal

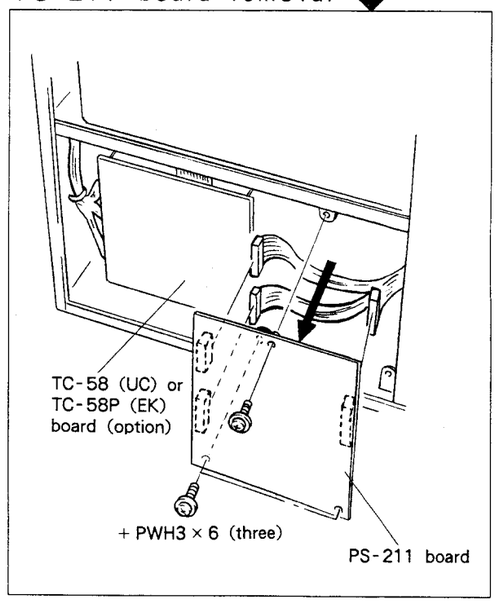

SP-13 board removal

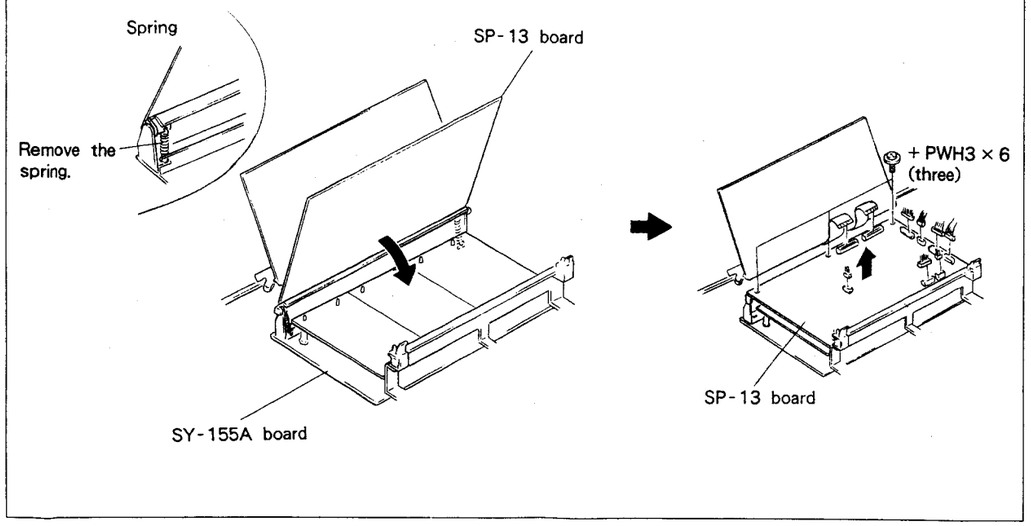

Opening the connector panel

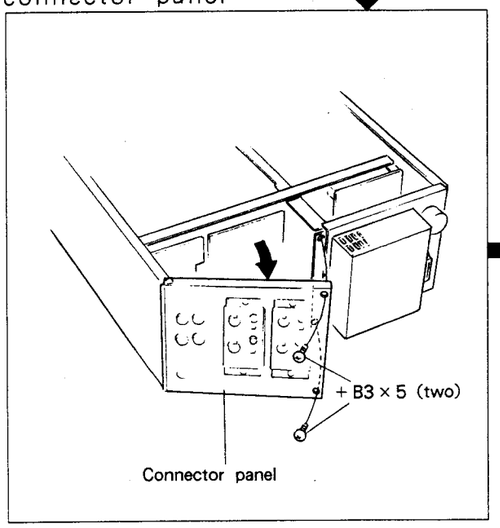

IF-283 board (option) removal

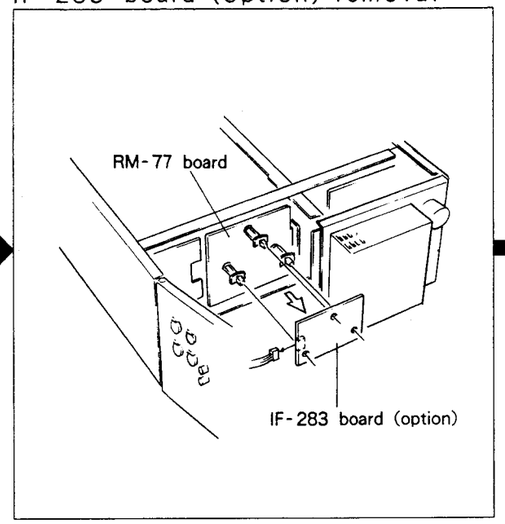

RM-77 board removal

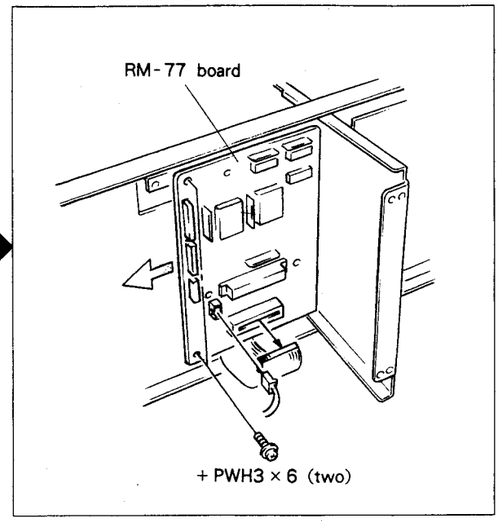

Rear panel removal

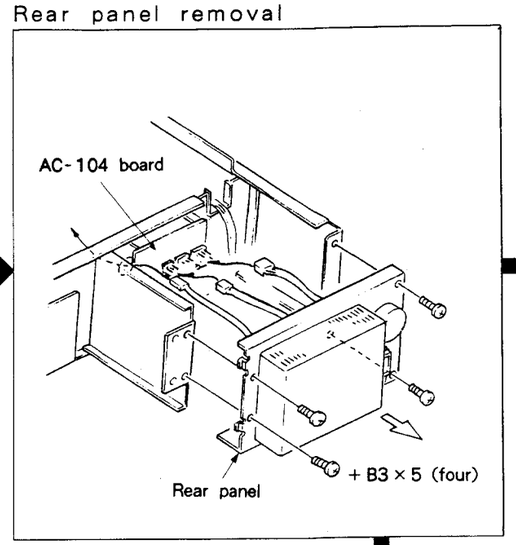

Opening the TC-58 (UC) or TC-58P (EK) board (option)

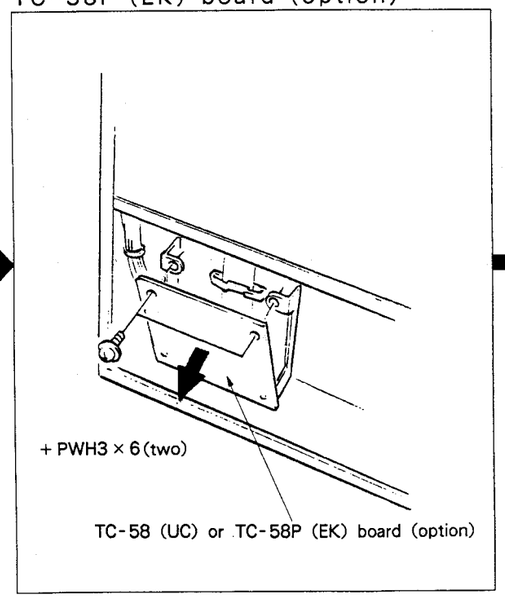

TC-58 (UC) or TC-58P (EK) board (option) removal

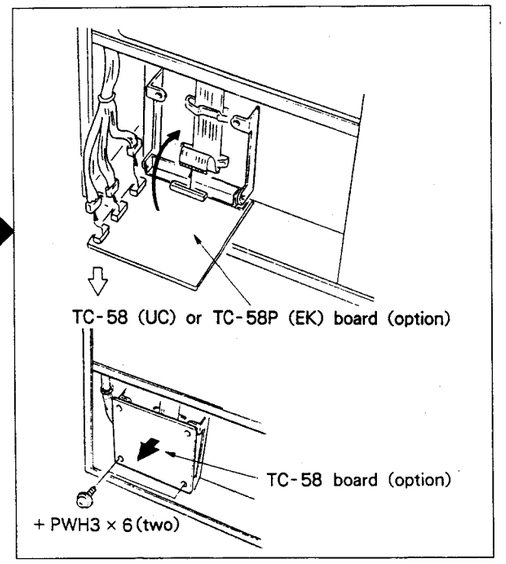

CP-171 board removal

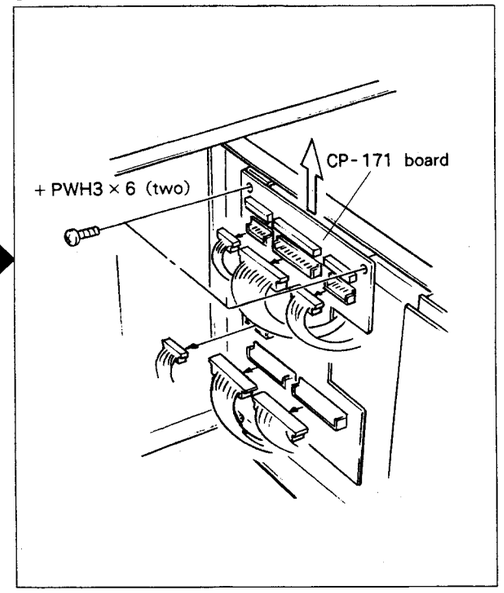

AC-104 board removal

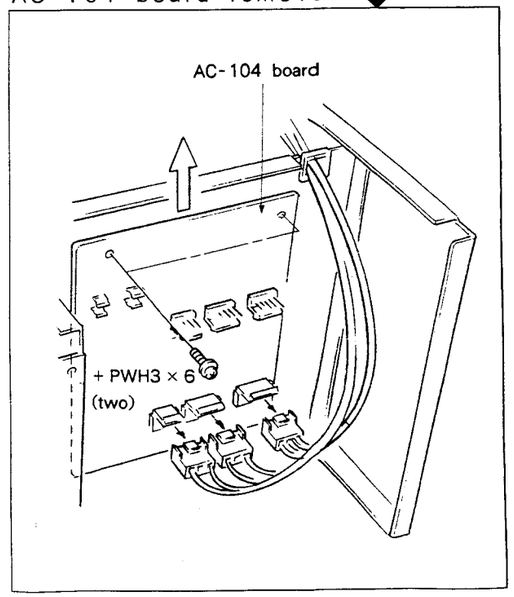

Switching regulator removal

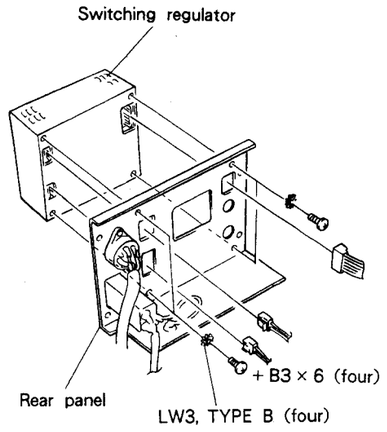

Opening the SV-123 board

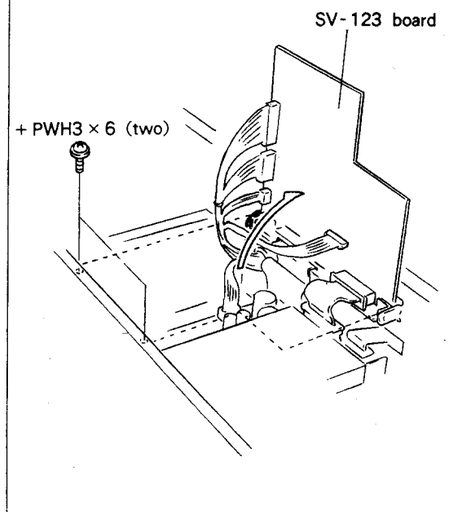

MD assembly removal

Move the MD assembly toward the rear panel and lift it up to remove.

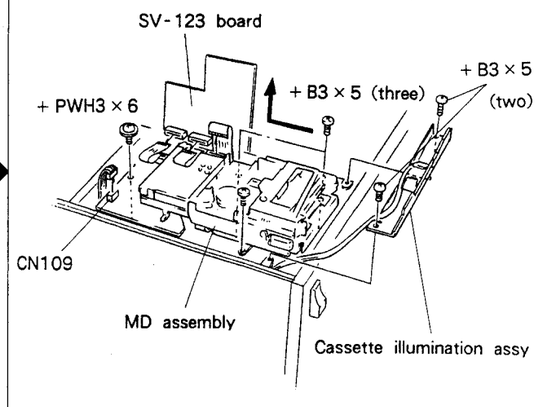

DR-139 board removal

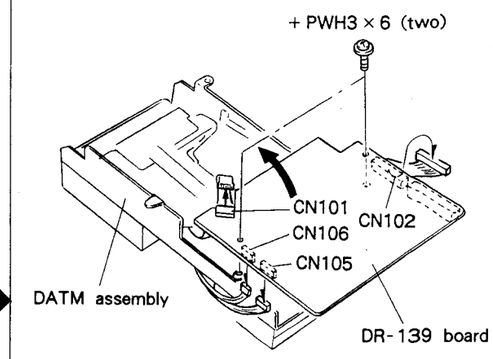

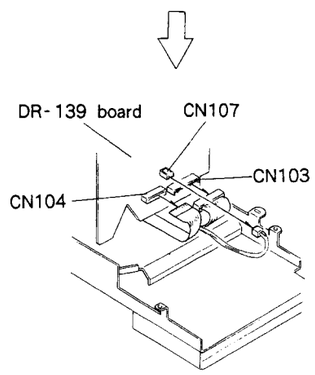

SV-123 board removal

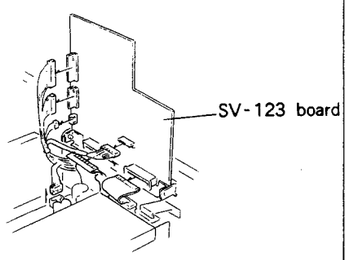

Remove the harness and close the SV-123 board.

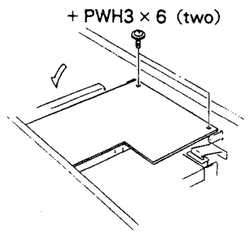

Cassette compartment removal

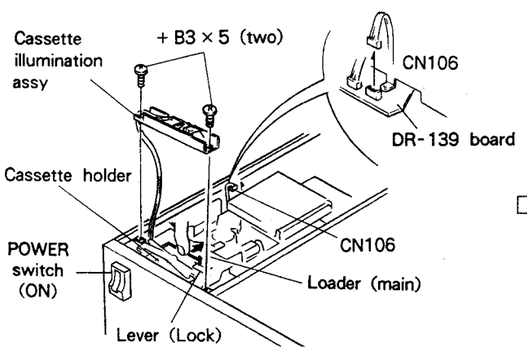

1. Turn on the POWER switch.
2. Lift up the lever (lock).
3. Use your finger to push the loader as shown by the arrow so that the cassette holder goes all the way down.
4. With the cassette holder all the way down, turn off the POWER switch. (The cassette holder will normally go back up after about a second it is down. Turn off the POWER switch before the cassette holder goes back up.)

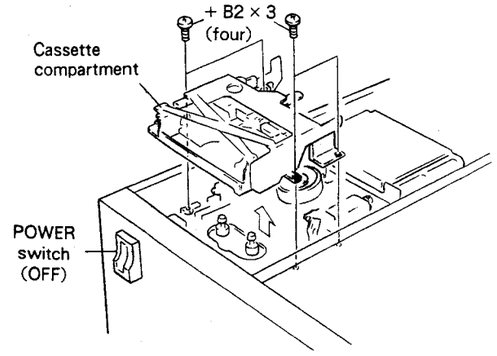

5. To remove the cassette compartment, lift up the rear panel side and then lift up the front panel side. Then remove it directly upward, as shown by the arrow.

Note : While removing the cassette compartment, do not bump it left or right.

DATM assembly and Cassette compartment

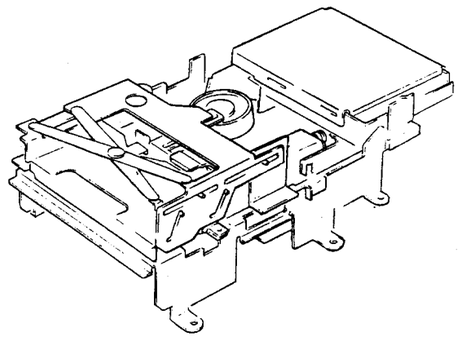

Note : Refer to the instructions "2-4-1.Instllation position of the front panel and cassette compartment" for installing the DATM assembly and the cassette compartment.

Cassette compartment removal

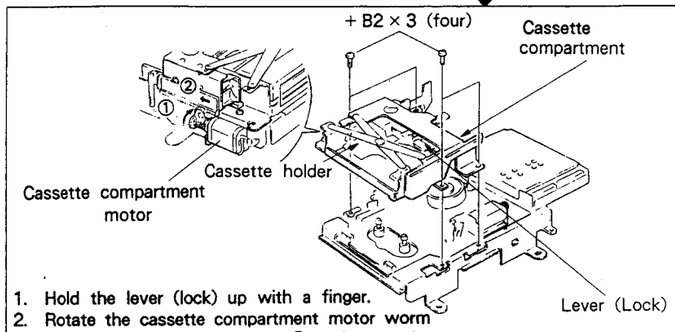

1. Hold the lever (lock) up with a finger.
2. Rotate the cassette compartment motor worm gear in the direction of arrow ①, and move the cassette holder in the direction of arrow ②. After the cassette holder has advanced a little bit take your finger off the lever (lock).
3. Rotate the cassette compartment motor worm gear and lower the cassette holder completely.
4. Remove screws + B2 × 3 (4 screws) and remove the cassette compartment from the DATM assembly.

Drum assembly removal

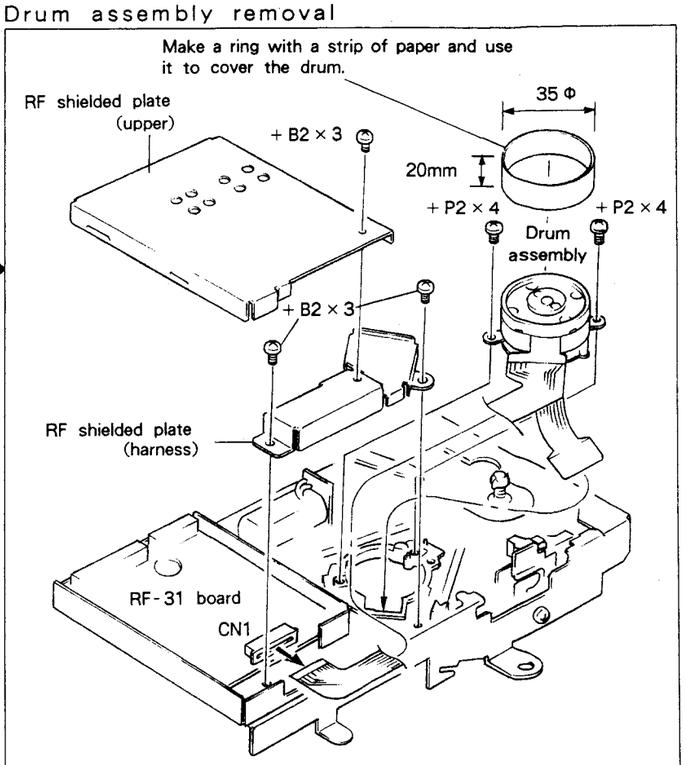

Removal of the cassette compartment motor and cassette holder detection switches (S1 and S2)

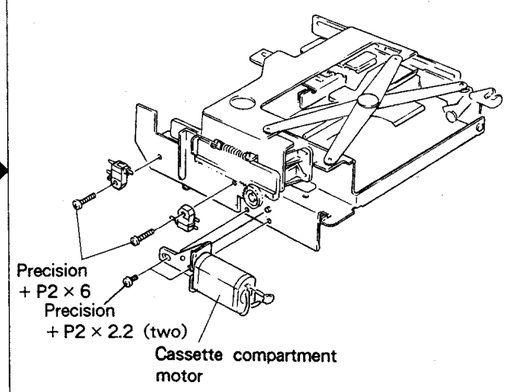

Removal of the pinch roller, tape-end sensor, and mode detection switch.

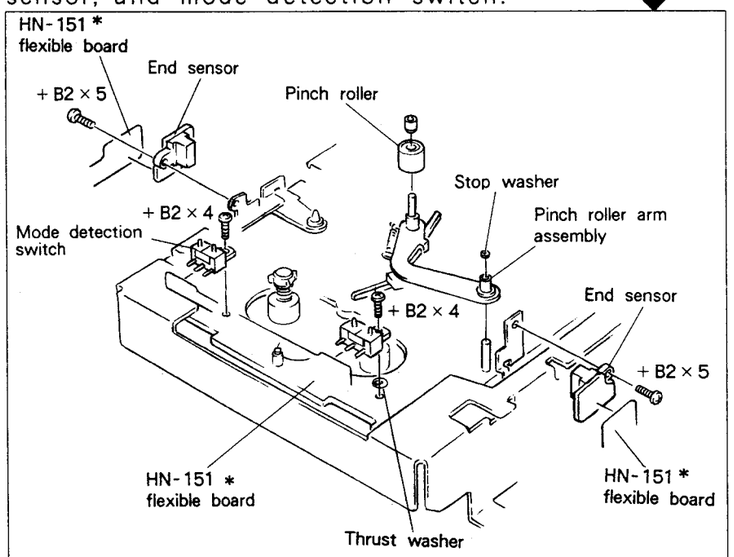

* Handling the flexible printed board

- Keep the soldering iron temperature at around 270℃.
- Do not touch the same pattern more than 3 times with the soldering iron.
- Do not exert any excessive force on the pattern.

RF-31 board assembly removal

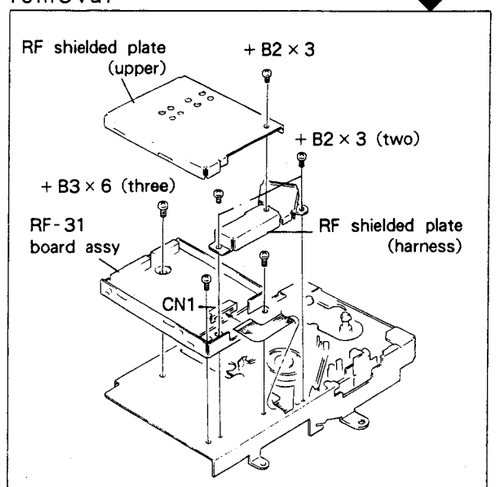

Rotary encoder removal

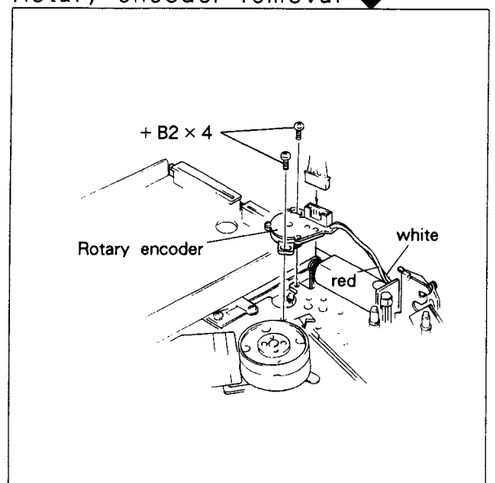

MD shielded plate removal

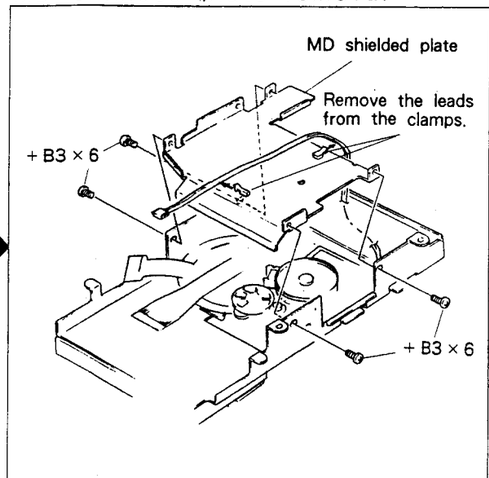

Reel motor assembly removal

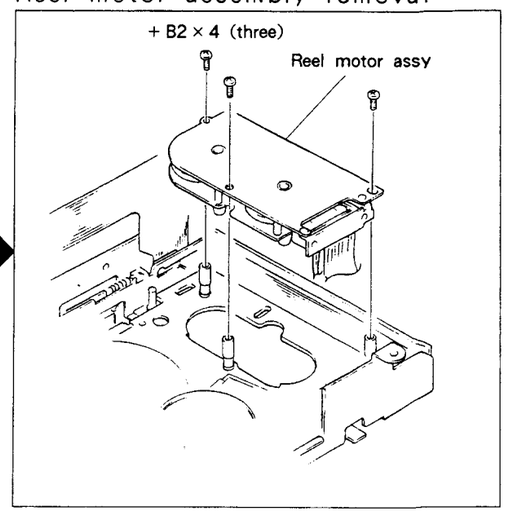

Loading motor removal

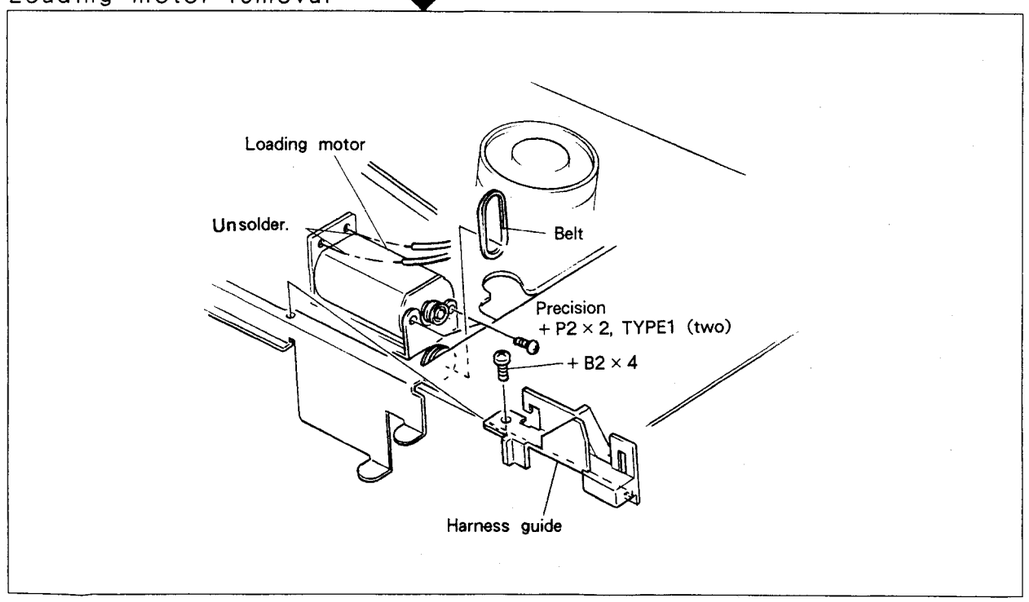

Capstan motor removal

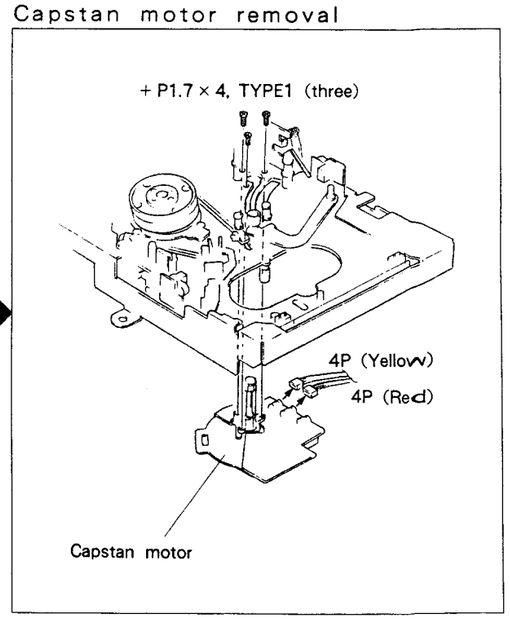

ADJUSTMENTS (CONFIRMATIONS) AFTER MAJOR PARTS REPLACEMENTS

When you replace major parts, be sure to adjust and confirm the following items.

Mechanism Deck Assembly (DATM-06R)

4-3-2. End sensor operation check → 4-3-3. FF/REW torque check → 4-3-4. FWD torque adjustment →
4-3-5. REV torque adjustment → 4-3-6. FWD back tension adjustment → 4-3-7. EJECT torque check →
4-4-1. Tape running check (1) → 4-4-2. Tape running check (2) → (cassette compartment assembly mounting) →
4-2. Mechanism device test → 4-3-8. FF/REW time check → 4-4-3. Tape path fine adjustment → 4-4-4. RF raise up time check →
4-4-5. Lack of RF waveform check in FF/REW → 4-4-6. Overall tape path check → 4-5-1. SWP position adjustment →
4-5-2. ATF playback AGC adjustment → 4-6. Recording/playback adjustment (recording current level adjustment) → 5-2. Signal processing adjustment (RF PLL adjustment)
4-7-2. Error rate check

Drum Assembly (DDH-14AR)

4-3-4. FWD torque adjustment → 4-3-5. REV torque adjustment → 4-3-6. FWD back tension adjustment →
4-4-1. Tape running check (1) → 4-4-2. Tape running check (2) → (cassette compartment assembly mounting) →
4-2. Mechanism device test → 4-4-3. Tape path fine adjustment → 4-4-4. RF raise up time check → 4-4-5. Lack of RF waveform check in FF/REW →
4-4-6. Overall tape path check → 4-5-1. SWP position adjustment → 4-5-2. ATF playback AGC adjustment →
4-6. Recording/playback adjustment (recording current level adjustment) → 5-2. Signal processing adjustment (RF PLL adjustment) → 4-7-2. Error rate check

Capstan Motor (BHF2803A)

4-4-1. Tape running check (1) → 4-4-2. Tape running check (2) → (cassette compartment assembly mounting) →
4-2. Mechanism device test → 4-4-3. Tape path fine adjustment → 4-4-4. RF raise up time check → Lack of RF waveform check in FF/REW →
4-4-6. Overall tape path check

Reel Motor (U-2A)

4-3-3. FF/REW torque check → 4-3-4. FWD torque adjustment → 4-3-5. REV torque adjustment →
4-3-6. FWD back tension adjustment → 4-3-7. EJECT torque check → 4-4-1. Tape running check (1) →
4-4-2. Tape running check (2) → (cassette compartment assembly mounting) → 4-2. Mechanism device test →

4-3-8. FF/REW time check → 4-4-3. Tape path fine adjustment → 4-4-4. RF raise up time check →
4-4-5. Lack of RF waveform check in FF/REW → 4-4-6. Overall tape path check

Pinch Roller Block Assembly

4-4-1. Tape running check (1) → 4-4-2. Tape running check (2) → (cassette compartment assembly mounting) →
4-2. Mechanism device test → 4-4-3. Tape path fine adjustment → 4-4-4. RF raise up time check → 4-4-5. Lack of RF waveform check in FF/REW →
4-4-6. Overall tape path check

Rotary Encoder

4-3-1. Rotary encoder position adjustment → 4-4-3. Tape path fine adjustment → 4-4-4. RF raise up time check →
4-2. Mechanism device test

Cassette Compartment Assembly

4-2. Mechanism device test → 4-8. Cassette compartment operation check → 4-3-8. FF/REW time check

DR-139 Board

4-2. Mechanism device test → 4-3-3. FF/REW torque adjustment → 4-3-4. FWD torque adjustment →
4-3-5. REV torque adjustment → 4-3-6. FWD back tension adjustment → 4-3-7. EJECT torque check →
4-4-1. Tape running check (1) → 4-4-2. Tape running check (2) → 4-4-3. Tape path fine adjustment →
4-4-4. RF raise up time check → 4-4-5. Lack of RF waveform check in FF/REW → 4-4-6. Overall tape path check

SV-123 Board

4-2. Mechanism device test → 4-4-1. Tape running check (1) → 4-4-2. Tape running check (2) →
4-4-3. Tape path fine adjustment → 4-4-4. RF raise up time check → 4-4-5. Lack of RF waveform check in FF/REW →
4-4-6. Overall tape path check → 4-5-1. SWP position adjustment

RF-31 Board Assembly

4-5-2. ATF playback AGC adjustment → 4-6. Recording/playback adjustment (recording current level adjustment) → 5-2. Signal processing adjustment (RF PLL adjustment) →
4-7-2. Error rate check

2-2. Board Arrangement View For PCM-7050

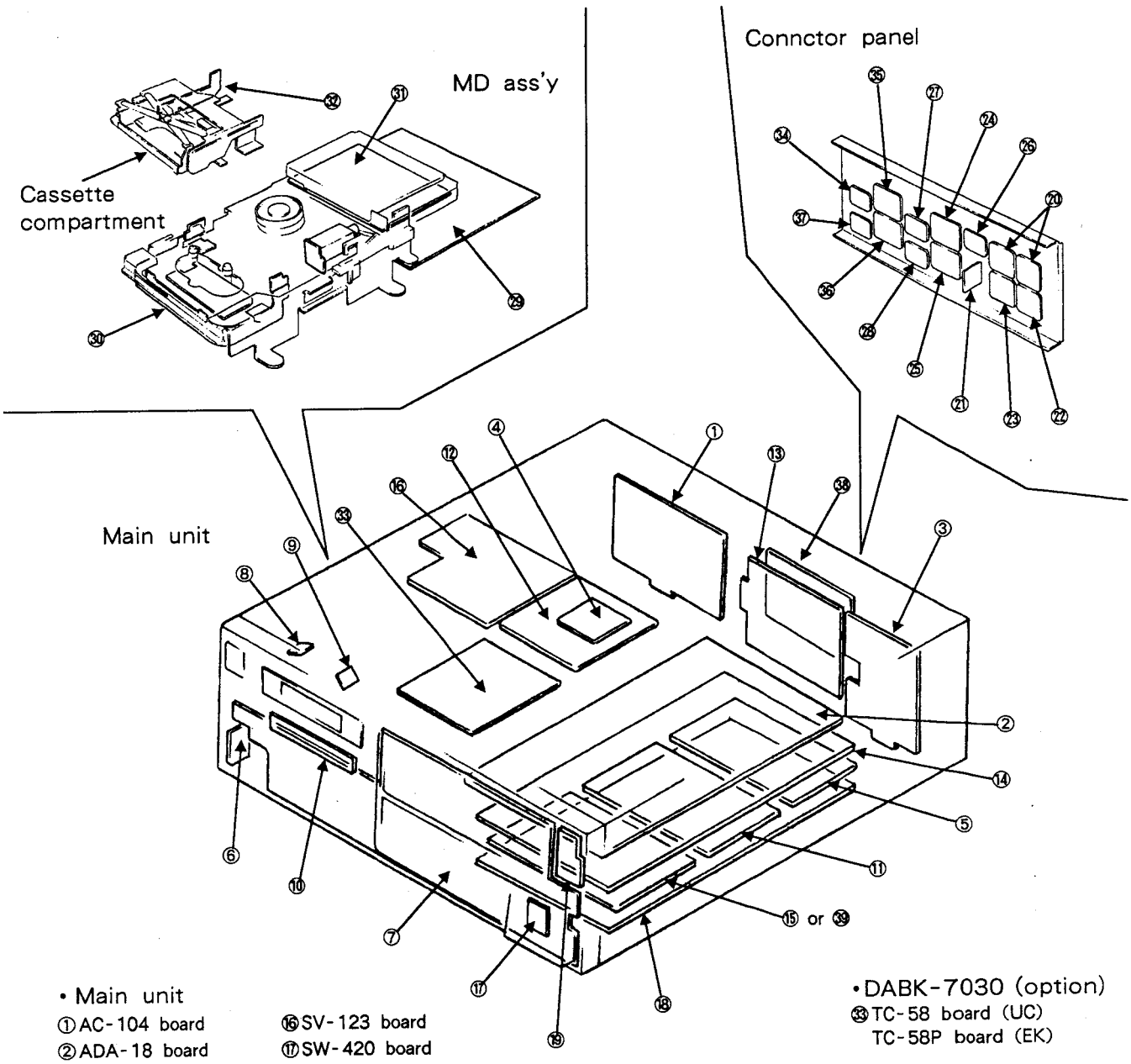

• Main unit
①AC-104 board
②ADA-18 board
③CP-171 board
④DC-47 board
⑤DIO-10 board
⑥HP-47 board
⑦KY-192 board
⑧LE-90A board
⑨LE-90B board
⑩LED-104 board
⑪MEM-40A board
⑫PS-211 board
⑬RM-77 board
⑭SP-13 board
⑮SP-17C board
⑯SV-123 board
⑰SW-420 board
⑱SY-155A board
⑲VR-109 board

< Connector panel >
⑳CP-157A board
㉑CP-158 board
㉒CP-172A board
㉓CP-172B board
㉔CP-173A board
㉕CP-173B board
㉖SW-426 board
㉗SW-453 board
㉘SW-454 board

< MD ass'y >
㉙DR-139 board
㉚HN-151 flexible board
㉛RF-31 board

< Cassette compartment >
㉜SW-452 board

•DABK-7030 (option)
㉝TC-58 board (UC)
TC-58P board (EK)

< Connector panel >
㉞CP-152 board
㉟CP-159A board
㊱CP-159B board
㊲SW-455 board

•DABK-7033 (Option)
㊳IF-283 board

•DABK-7055 (Option)
㊴MEM-40C board

2-3. Cassette Compartment Service Information

1) Releasing the cassette compartment lever

Be sure to release the lever (lock) before turning (by hand) the cassette control motor's worm gear to move the cassette holder when the cassette compartment is to be replaced, etc.

Raise the lever (lock) as shown below to release the lock.

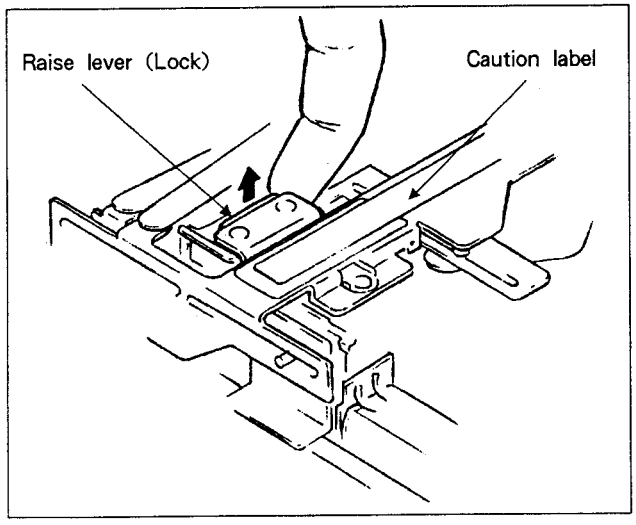

2) Extracting a cassette tape when EJECT and cassette UP are inoperational.

If the EJECT operation does not work or if the cassette compartment does not go up, extract the cassette tape by following the procedure below.

Procedure

(1) Turn off the POWER switch.
(2) Remove the top panel.(Refer to 2-1.)
(3) Check whether the tape is out of the cassette or contained in the cassette.

If the tape is contained in the cassette, do the following :

(4) Turn the cassette control motor's worm gear as shown by the arrow to raise the cassette holder.

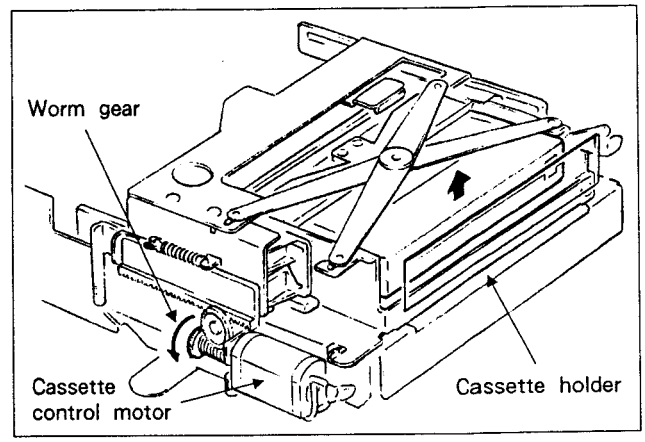

(5) Eject the cassette when the cassette door on the front panel opens upward in link with the raising of the cassette holder (cassette tape).
(6) Turn the worm gear until the cassette is positioned to be taken out.
(7) Check for any problems after taking out the cassette. Execute proper countermeasures if necessary.

If the tape is out of the cassette, do the following:

(4) Turn (by hand) the loading motor pulley on the mechanical deck, as shown by the arrow (ccw). Unload the eject guide to return it. The tape will then be in the loading position.

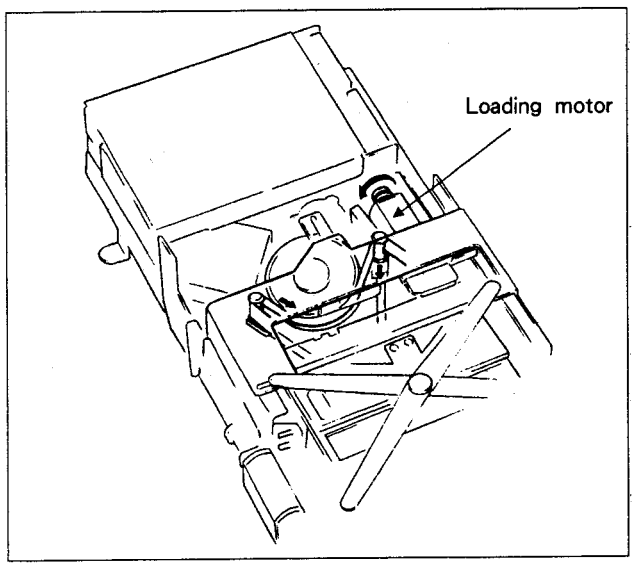

(5) Remove the cassette compartment.(Refer to 2-1.) Slowly take out the cassette compartment while keeping the front cover open with your fingers.

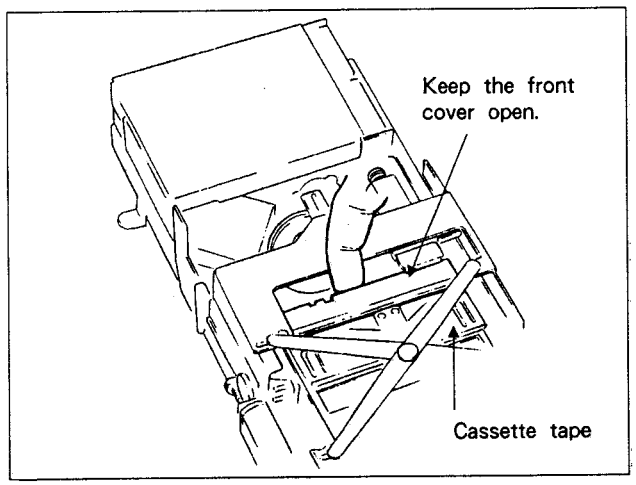

(6) Carefully take out the tape remaining in the unit (mechanical deck) without scratching it.

(7) While keeping the cassette's front cover open, turn the reel hub in the cassette to wind the tape around the reel.

(8) Turn the cassette control motor's worm gear to raise the cassette holder, as shown by the arrow ①. Then take out the cassette. Check for any problems after taking out the cassette. Execute proper countermeasures if necessary. After executing countermeasures, install the cassette compartment on the mechanical deck. To install, turn the worm gear in reverse to lower the cassette holder, as shown by the arrow②. Turn the worm gear until the cassette holder goes all the way down. Then attach the cassette compartment to the MD with the four screws (+ B2 × 3).

Turn on the POWER switch to return the cassette compartment to its proper position.

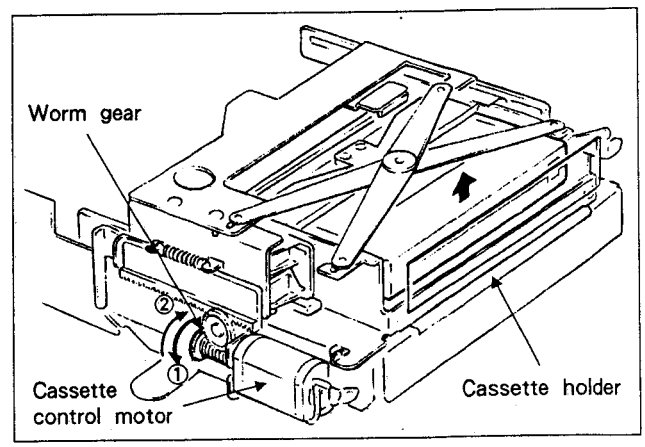

3) Operation Without the Cassette Compartment (Using the cassette weight and cassette compartment dummy connector)

To operate the unit while the cassette compartment is removed, use the cassette compartment dummy connector * to stop the function of the cassette compartment motor control. Also use the cassette weight (J-6224-140-A) to insert a cassette (test tape, etc.) and to operate the unit.

* About the cassette compartment dummy connector

The cassette compartment dummy connector is used to short pins 1, 2, and 3 of the CN106 connctor on the DR-139 board.

You can make it simply in the following way using a small harness (CCP).

Required item :

Small harness (CCP), part number 1-946-957-11

(1) Cut the orange and yellow lead wires of the harness (CCP) at the base as shown in the figure.

(2) Short (solder) the three remaining lead wires (red, brown, and blue) as shown in the figure.

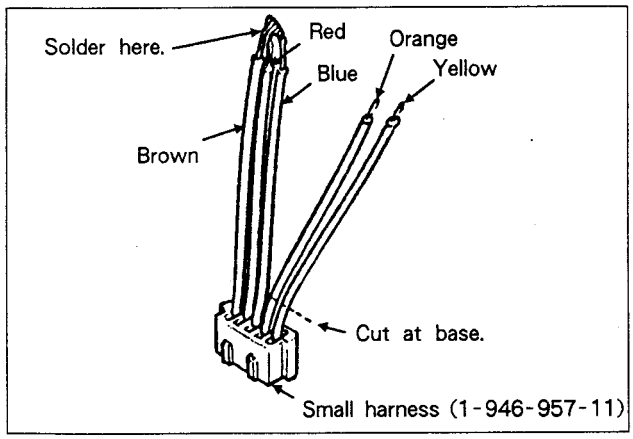

Using the Cassette compartment dummy connector and cassette weight

(1) Remove the top panel.

(2) Remove the cassette compartment. (Refer to the removal procedure in 2-1.)

(3) Insert the cassette compartment dummy connector into the CN106 connector on the mechanical deck's DR-139 board.

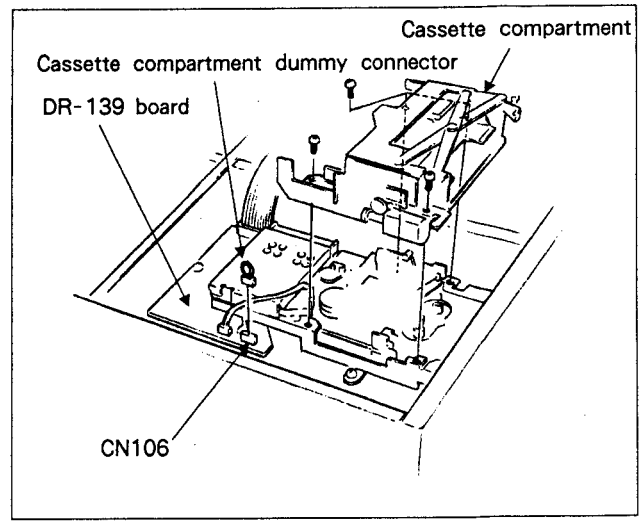

(4) Attach the cassette tape (test tape, etc.) to the cassette weight.

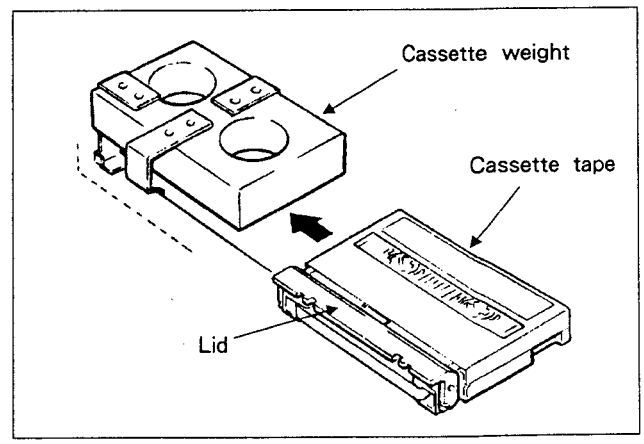

(5) Align the cassette weight attached the cassette tape over the cassette positioning pin and mount it on the mechanical deck.

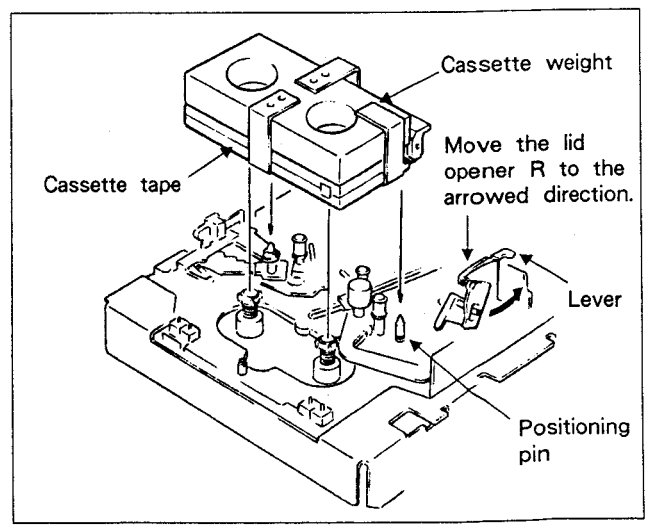

2-4. Precautions for the main parts replacement procedure

2-4-1. Installation position of the front panel and cassette compartment

Some DAT cassettes have a different external shape with a small corner round as shown below.

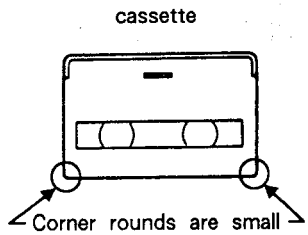

Using this type of cassette causes the round part of the corner of cassette tape being caught in the front panel window if the gaps between the cassette and the insertion window of the front panel are insufficient as shown below, and the error massage "ERROR 2-21"may be displayed on the display of the front panel.

①DATM assembly (DATM-06R)
②Cassette compartment assembly
③Front panel assembly

Ensure to have spaces between the cassette and front panel window when reinstalling the above parts after exchanging them for repairment.

Adjust the installing position within the range of the holes in order to install the front panel assembly and DATM assembly. Install the whole DATM by clockwise to make gaps easier.

After installation, carry out an eject operation several times by using an optional cassette tape and confirm that the both sides of the cassette tape do not touch the front panel window.

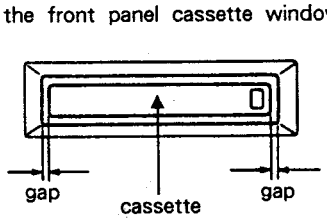

2-5. Chip Part Replacement Procedure

Tools : Soldering iron of 20W (Use a temperature controller, if possible, which can set control the iron temperature to 270 ± 10℃)
Solder (0.6 mm dia.)
Desoldering metal braid (Solder wick or equivalent)
Tweezers

Soldering Conditions : Tip temperature ; 270 ± 10℃
Within the 2 seconds.

1. To remove a resistor or capacitor, place the tip of a soldering iron on chip parts to heat the parts, and then move it horizontally for removal while being desoldered.
   For removal of a diode or transistor, heat the one side, with two pins, of chip parts at the same time, set the parts up when desoldered, and remove the two pins.
   And then, remove the pin on anothe side.
2. Absorb solder by using a desoldering metal braid to smooth the land surface of board after removal.
3. Confirm by visual check that no pattern of the removed chip parts is peeled off and no adjacent parts is damaged or bridged.
4. Perform a thin pretinning on the pattern.
5. Place new chip parts on the pattern to solder its both sides.

Note :
- The chip part removed should not be used again.
- When mounting the new chip part, should not shift so that it not short.
- Use the soldering iron verticaly as much as possible.
- When mounting the new chip part, heat it from pattern side. Never contact the tip of the soldering iron to the part.

2-6. SERVICE INFORMATION CONCERNING THE SY-155A BOARD (SYSTEM CONTROL)

2-6-1. LED for confirming the operations of the SY-155A board

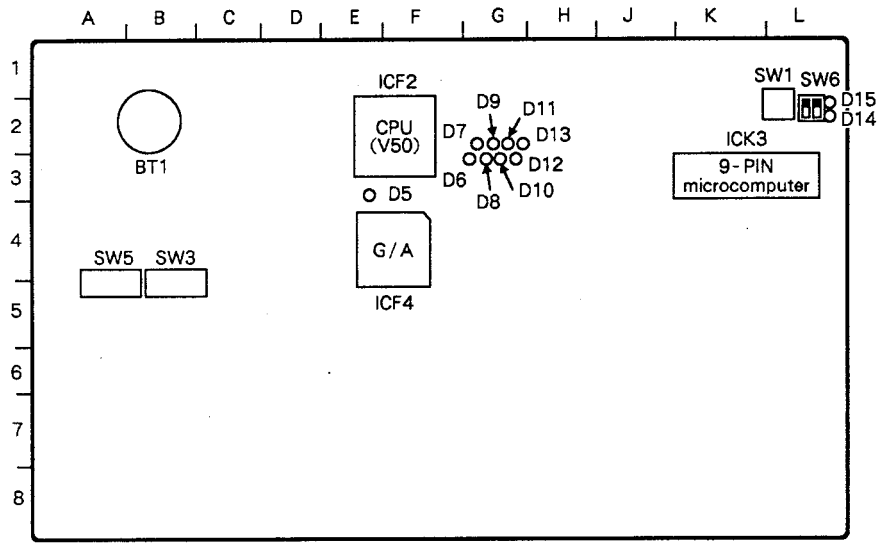

SY-155A Board
(component side)

There are 11 LED, D5-D15, to confirm the operations of the SY-155A board.
The following explains the workings of each LED.

D5 (RED) : HARD INITIALIZE completion TALLY (SYS-INIT)
- Lights when the power source voltage monitoring circuit (ICK2) is reset.
- Extionguished when initialization (SYS-INIT ROUTINE) is completed.

D6 (RED) : BACKUP MEMORY INITIALIZE TALLY
- Lights when the backup memory is initialized at the DEFAULT value.

D7 (GREEN) : SYS nomal TALLY
- Blinks when the system component (SYSCON) operates normally . (200ms interval)

D8 (YELLOW) : SP-13 MUTE TALLY
Lights when the system activates muting on the SP-13 board

MUTE —— • PB AUDIO MUTE
└— • SP-13 OUTPUT MUTE

(Lights in each case.)

D9 (YELLOW) : AUDIO MEMORY DATA OUT TALLY
- AUDIO MEMORY (MEM-40 board) Lights when data is output from the SP-13 board
- Lights when the monitor is set to REPRO in the SYNC REC (RMW) mode.

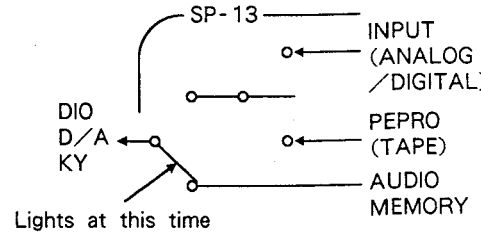

D10 (YELLOW): RMW TALLY

Lights when the operating mode of the CXD1008/1009 (SP-13 board) is RMW (Read Modify Write).

① When the recording system mode is SYNC REC.

② When SOFT tape (wide track pitch) is loaded.

③ When the leading head is selected on the ERROR RATE HEAD menu (SERVICE MENU)

④ When trailing head is selected on the TEST signal recording menu (SERVICE MENU)

Conditions \ 08/09 MODE	Leading head mode	Trailing head mode
The above ② or ③ or ④	AUDIO SUB (PB)	AUDIO SUB REC
SYNC REC SAFE	AUDIO SUB (PB)	AUDIO SUB REC
SYNC REC ASSEMBLE	AUDIO SUB (PB)	AUDIO SUB REC
SYNC REC AUDIO INSERT	AUDIO SUB (PB)	AUDIO SUB REC PB
SYNC REC SUB INSERT	AUDIO SUB PB	AUDIO SUB (PB) REC
MONITOR REC SAFE	AUDIO SUB REC	AUDIO SUB (PB)
MONITOR REC ASSEMBLE	AUDIO SUB REC	AUDIO SUB (PB)
MONITOR REC AUDIO INSERT	AUDIO SUB REC PB	AUDIO SUB (PB)
MONITOR REC SUB INSERT	AUDIO SUB PB	AUDIO SUB (PB) REC

◯ mark : Sound comes out from here

D11 (GREEN) : 9-PIN microcomputer normal TALLY

- Lights when communication between the 9-PIN microcomputer (ICK3) and the system (ICF2) has been confirmed.

D12 (RED) : 9-PIN data signal reception TALLY (9-PIN microcomputer → SYSCON)

- Lights when receiving data from a 9-PIN microcomputer.

D13 (RED) : 9-PIN data signal transmission TALLY (9-PIN microcomputer ← SYSCON)

- Lights when data is transmitted to a 9-PIN microcomputer.

D14 (RED) : 9-PIN data signal reception TALLY (SCU → 9-PIN microcomputer)

- Lights when receiving data from a SCU (μPD71051) ICK4.

D15 (GREEN) : 9-PIN data siganl transmission TALLY (SCU ← 9PIN microcomputer)

- Lights when data is transmitted to a SCU.

LED display management after power is on

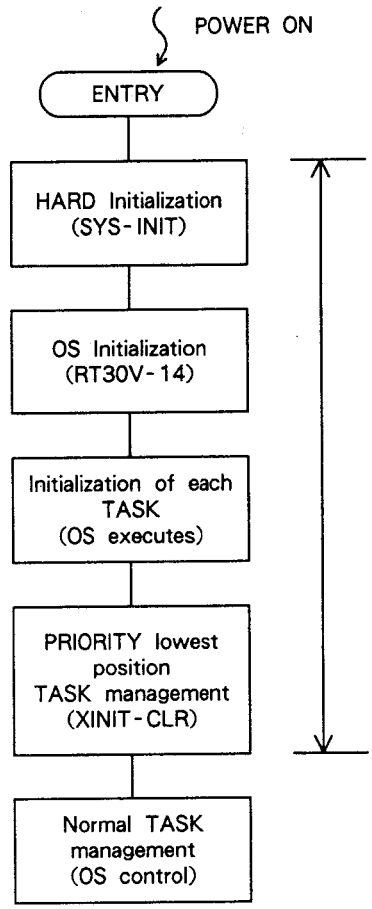

: LED D5~13 Lighted

: LED D5 Extinguished

Initialization management

: LED D6~13 Display starts

: Fluorescent display front panel TALLY display starts

2-6-2. Replacing the SY-155A board

The following two items are necessary when replacing the SY-155A board

(1) Initialization of the SETUP item to back up

(2) Writing to the SERVO system DPG and AGC DATA backup memory

Make sure that the following time information (① ~⑤) is reset by doing step (1).

①HOUR TIME (DRUM ON TIME) :
display menu, service munu

②OPERATION TIME : service munu

③TAPE RUNNIING TIME : service munu

④TOTAL HOUR TIME : service munu

⑤THREAD/UNTHREAD COUNTER :
service munu

Consequently, before replacing the SY-155A board make a note of this information. After replacing, it is important to figure out the sum of the information taken note of and the newly displayed time to set the correct time.

SY-155A board replacing procedure

Step 1 Make a note of the hour meter data

(1) Turn on the power (POWER) to the unit.

(2) Open the service menu by simultaneously pressing the STOP, DISPLAY and SET keys on the front panel.

(3) While pressing the DATA key, turn the search dial to the right to set the work area of the display of the front panel to the following.
Display (work area) : oPEn

(4) Press the SET key.

(5) While pressing the MENU key, turn the search dial to the right, display the hour meter data (① ~⑤) and make a note of them.

(6) Turn the power (POWER) OFF.

Step 2 Removing the SY-155A board

Carry out the following procedure while referring to the instructions for "2-1. Removal of boards and major mechanical parts".

Note : Carry out removal with the power (POWER) turned off.

(1) Remove the top and bottom panels from the unit.

(2) Open the ADA-18 board and the SP-13 board

(3) Remove the DIO-10 board, MEM-40A board and the optional MEM-40C board (if the DABK-7055 is installed).

(4) Remove the harness from each connector of the SY-155A board.

(5) Remove the SY-155A board from the bottom panel.

Step 3 Installation of the new SY-155A board

(1) Carry out the following procedures before installing the SY-155A board in the unit.

① Solder (solder bridge) the battery backup solder slit (SL2) (see diagram below) on the solder side of the SY-155A board.

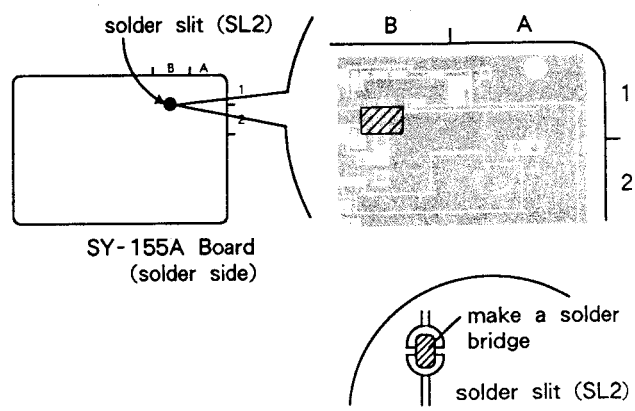

② Set the bit switches (SW5, SE,3) on the component side of the SY-155A board in the following way.

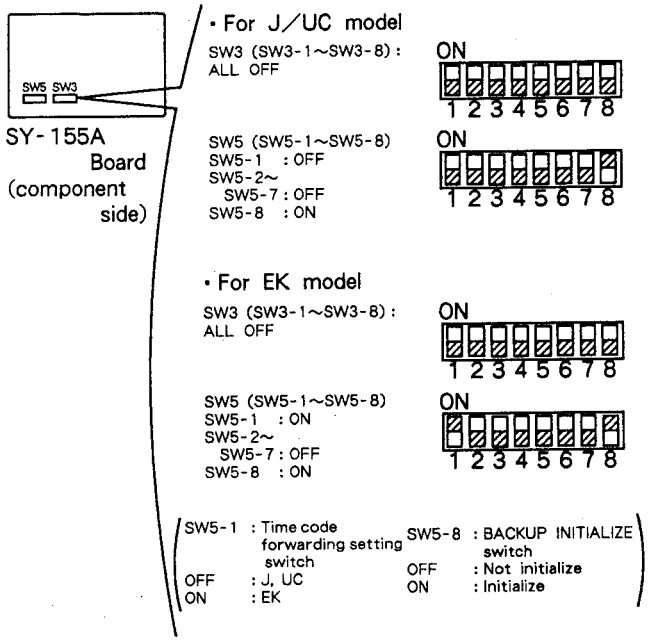

(3) Install the SY-155A board in the unit.

(4) Attach the bottom panel to the unit.

Step 4 Initialization of set up data and time information data

(1) Turn the main unit power switch (POWER) to ON.

(2) Confirm that LED D6, that confirms the operation of the SY-155A board, is lighted.
(Execute the initialization of the back up memory TALLY)

(3) Confirm that the FL display of the front panel display is as below.
(That is ; SERVO DPG, AGC DATA CLEAR)
FL display : Error 2-05

(4) Turn main unit power switch to OFF.

(5) Set switch number 8 of the SY-155A board's bit switch (SW5) to OFF.
Note : Make sure that this switch (SW5-8) is off. If it is left on, the back up memory will be initialized each time the power switch is turned on.

(6) Confirm that the SY-155A board's LED D6 (red) goes out when the power switch is turned on. (At this point the Error 2-05 indicator is displayed on the FL display because the SERVO is not yet adjusted.)
Further, confirm that the time code indicator (upper left) and time code mode indicator (time area, upper right) are set in the tape time area of the FL display in the following way.

FL display / Destination	Tape time area	
	Set time code display	Time code mode display
J, UC	SMPTE	DF
EK	EBU	—

If the display is different, confirm the setting of switch 1 (time code setting switch that depends on the destination) of the SY-155A board's bit switch (SW5) and redo the step 4 procedure form (1).
(It must be redone. The TC format's default value is set by the number 1 switch during backup memory initialaization.)

Step 5 Writing the servo system's DPG and AGC data into memory

(1) Perform adjustment of DPG and AGC by opening up the test menu in the service menu.
Concerning adjustment. Perform it while referring to 4-21 page, 4-5-1. SWP position adjustment and 4-22 page, 4-5-2. ATG playback AGC adjustment

(2) Confirm that Error 2-05 is not displayed in the FL display. Further, insert a cassette that has finished being recorded (music) and replay it to confirm that the sound is reproduced.

(3) Turn the power switch (POWER) to OFF.

(4) Turn the power switch (POWER) to ON.

(5) Confirm that the following indicators are not displayed on the FL display.
Display indicator (work area) : Error 1-05
If the indicator is displayed confirm the battery backup's solder slit.

(6) Turn the power switch (POWER) to OFF.
(7) Install the optional board.
(8) Close the SP-13 board and ADA-18 board and fasten with screws.
(9) Put on the top panel.

2-6-3. Replacing the lithium battery (CR-2450)

Replace the SY-155A board's lithium battery (CR-2450) for battery backup according to the following procedure.

Name of parts

Lithium battery (CR-2450) : 1 (part number : 1-528-229-11)

Explanation of operation

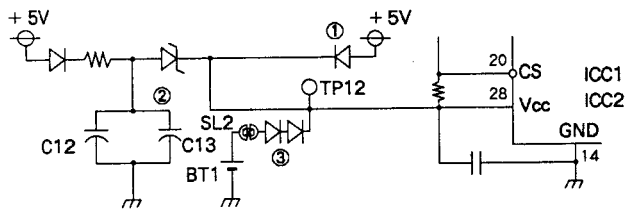

In the above circuits, Vcc + 5V and CS pull-up resistor + 5V are supplied to ICC1 and ICC2 by three power circuits as follows :

① Power source of the unit
② + 5V from C12 and C13 charged by the power source of the unit.
③ + 3V from BT1

- During operation of the unit the above voltages are supplied by ①, and ② recharges.
- When the unit is off the above voltages are supplied by ②.
- When ② is completely discharged, the above voltages are supplied by ③.

In this way the ICC1's and ICC2's SRAM data is backed up.

Replacing procedure

(1) Turn the power switch (POWER) of the PCM-7030 to ON and wait for more than 10 minutes.
(2) Turn the power switch (POWER) to OFF.
(3) Remove the SY-155A board from the unit.
(4) Remove the solder from the solder slit (SL2) on the solder side of the SY-155A board.
(5) Remove the lithium battery (BT1) from the SY-155A board.
(6) Solder (solder bridge) a new lithium battery (CR-2450).
(7) Solder (solder bridge) the solder slit (SL2).
(8) Install the SY-155A board in the unit.
(9) Turn the power switch (POWER) to ON.
(10) Confirm that the ARAM (ALARM) indicator on the front panel is extinguished.

Precautions :

- Perform the change carefully because the contents of the SRAM will be destroyed if the pins of TP12, ICC1 and ICC2 are shorted.
- In procedure (8) above if ARAM (ALARM) is lighted (Error 1-05 or Error 2-05 are displayed in the FL display), their ALARM management is carried out. (Refer to the item on setting the servo data)
- Replace them after confirming that the voltage of the new batteries is 2.6V or more.

2-7. SELF-DIAGNOSIS (ERROR CODE)

2-7-1. Error codes

This section shows the error codes and the malfunctioning parts that can be assumed from the error codes displayed (refer to the OPERATION MANUAL's pages 7-6, 7-2-2. for the section on error codes) by the self-diagnosis function of the SYS CPU (SY-155A board's ICF2, μPD70216 [V50]). With these it is possible to know what caused the error.

Error code1-** (Error 1-**)
Errors that occur related to the SY-155 board (system control)

Error code	Error content	Error level	Assumed malfunctioning parts
1-01	Error in ADDRESS BUS	5	• μPD70216L (CPU) (ICF2) • CXD8139AQ (ICF4) • ADDRESS (A0~A19) pattern
1-02	Error in DATA BUS	5	• μPD70216L (CPU) (ICF2) • CXD8139AQ (ICF4) • DATA (D0~D15) pattern
1-03	Error in ROM	5	• AM27C010 (ROM) (ICC3, ICC4) • ADDRESS, DATA or CONTROL pattern in ROM
1-04	Error in RAM	5	• μPD43256AGU (RAM) (ICC1, ICC2) • ADDRESS, DATA or CONTROL pattern in RAM
1-05*	BACKUP MEMORY DATA has been destroyed	5	• Battery backup circuit • RAM • TL7705CPS (RESET IC) (ICK2) • SN74LS03NS (ICD3)
1-10	Invalid interrupt occurred	5	• μPD71059GB (ICU) (ICG1, ICH1) • ADDRESS, DATA or CONTROL pattern in ICU

* Refer to the 2-7-2. Remedy for error code "Error 2-05" on page 2-31.

Error code2-＊＊ (Error 2-＊＊)

Errors that occur related to the SV-123 board (servo)

Error code	Error content	Error level	Assumed malfunctioning parts
2-02	Error in DATA BUS	5	• CXD8139AQ (ICF4), SY-155 board (SV I/F circuit) • CXP80524 (CPU) (IC101), SV-123 board • 8P harness, SV-123 board
2-04	Error in RAM	5	SV-123 board • CXP80524 (CPU) (IC101)
2-05*	BACKUP MEMORY for servo has been destroyed	5	Same as error code 1-05 (System backs up servo-system's DPG and AGC data)
2-10	Interrupt error during communications	5	SV-123 board • CXP80524 (CPU) (IC101) • SV INT signal pattern • 8P harness
2-20	Position error inside cassette insertion part	5	• Cassette compartment (mechanical trouble) • Cassette compartment sensors (CC UP, CC DOWN signals) and harness
2-21	Malfunction inside cassette insertion part	5	• Cassette tape is stuck in the cassette compartment • Cassette compartment sensors (CC UP, CC DOWN signals) and harness • Cassette compartment motor and casstte compartment motor drive circuit (DR-139 board)
2-22	Position error on tape guide	5	• Mechanical deck (tape guide, pinch rollor, etc.) • MD sensor (RE STOP, RE FWD, LIM SW signals) and harness
2-23	Malfunction of cassette loading motor	5	• Mechanical deck • MD sensor (RE STOP, RE FWD, LIM SW signals) and harness • Loading motor and loading motor drive circuit (DR-139 board)
2-24	Malfunction of pinch roller	5	
2-30	Malfunction of head drum motor	5	• Head drum • Drum motor and drum motor drive circuit (DR-139 board) • DFG sensor (drum FG) and harness

＊ Refer to the 2-7-2. Remedy for error code "Error 2-05" on page 2-31.

Error code	Error content	Error level	Assumed malfunctioning parts
2-31	Head drum motor doesn't revoluve (Drum stopped)	5	• Head drum • DFG sensor and harness • Drum motor and drum motor drive circuit (DR-139 board)
2-32	Abnormal head drum rotation speed (Drum revolves at high speed)	5	• Drum motor drive circuit (DR-139 board) • DFG sensor and harness
2-33	Head drum motor doesn't stop	5	• Drum motor drive circuit (DR-139 board) • DFG sensor and harness
2-40	Capstan motor doesn't rotate	5	• Tape is wrapped around the pinch roller (or tape guide) • Capstan motor and capstan motor drive circuit (DR-139 board) • CFG sensor (capstan FG) and harness
2-41	Capstan motor won't stop	5	• Capstan motor drive circuit (DR-139 board) • CFG sensor and harness
2-50	Take-up reel motor won't revolve	5	• Reel motor • Tape end sensor • Cassette tape load is abnormal • TFG sensor (Take-up FG) and harness
2-51	Supply reel motor won't revolve	5	• Reel motor • Tape end sensor • Cassette tape load is abnormal • SFG sensor (supply FG) and harness
2-52	Take-up reel motor won't stop	5	• Take-up reel drive circuit (DR-139 board) • TFG sensor and harness
2-53	Supply reel motor won't stop	5	• Supply reel drive circuit (DR-139 board) • SFG sensor and harness
2-60	Abnormal tape travel motion	5	• Supply torque (torque value adjustment) • Tape guide and head drum, etc.
2-70	Condensation on head drum	5	• Condensation sensor

Error code3-＊＊ (Error 3-＊＊)

Errors that occur related to the SP-13 board (signal management)

Error code	Error content	Error level	Assumed malfunctioning parts
3-02	Error in DATA BUS	5	• CN10, 20P flexible wire • CXD8184AQ (ICD3) (SYS I/F circuit)
3-10	Error in clock system (forward head)	5	• CN9, 20P flexible wire • CXD1009Q (ICD9)
3-11	Error in clock system (reverse head)	5	• CN9, 20P flexible wire • CXD1009Q (ICJ9)
3-12	Error in clock system ("DAT FRAME")	5	• CN9, 20P flexible wire • CXD8185AQ (ICC3) • CXD1008Q (ICC9)

Error code4-＊＊ (Error 4-＊＊)

Errors that occur related to the DIO-10 board (digital I/O)

Error code	Error content	Error level	Assumed malfunctioning parts
4-02	Error in DATA BUS	4	• CN15 (SY-155 board), CN3 (DIO-10 board) 48P D-SUB connector • CXD8134Q (IC12) (SYS I/F CIRCUIT)

Error code5-＊＊ (Error 5-＊＊)

Errors that occur related to the TC-58 board (time code reader/generator)

(When the DABK-7030 option is installed)

Error code	Error content	Error level	Assumed malfunctioning parts
5-02	Error in DATA BUS	4	• CN11 (SY-155 board), CN2 (TC-58 board) 30P fiexible wire • CXD8140Q (ICG4) (SYS I/F circuit)

Error code6-** (Error 6-**)
Errors that occur related to the MEM-40A board (memory-start)

Error code	Error content	Error level	Assumed malfunctioning parts
6-01	Error in ADDRESS BUS	4	• CN13 (SY-155 board), CN1 (MEM-40A board) 48P D-SUB connector • CXD8163AQ (IC1) (SYS I/F circuit)
6-02	Error in DATA BUS	4	• CN13 (SY-155 board), CN1 (MEM-40A board) 48P D-SUB connector • CXD8163AQ (IC1) (SYS I/F circuit)
6-04	Error in RAM	4	• CN13 (SY-155 board), CN1 (MEM-40A board) 48P D-SUB connector • CXD8163AQ (IC1) (SYS I/F circuit) • TMS44C256-00 (IC2~IC9)

Error code7-** (Error 7-**)
Errors that occur related to the MEM-40C board (edit memory)
(When the DABK-7055 option is installed)

Error code	Error content	Error level	Assumed malfunctioning parts
7-01	Error in ADDRESS BUS	4	• CN14 (SY-155 board), CN1 (MEM-40C board) 48P D-SUB connector • CXD8163AQ (IC1) (SYS I/F circuit)
7-02	Error in DATA BUS	4	• CN14 (SY-155 board), CN1 (MEM-40C board) 48P D-SUB connector • CXD8163AQ (IC1) (SYS I/F circuit)
7-04	Error in RAM	4	• CN14 (SY-155 board), CN1 (MEM-40C board) 48P D-SUB connector • CXD8163AQ (IC1) (SYS I/F circuit) • TMS44C256-00 (IC2~IC9)

Error code8-** (Error 8-**)
Errors that occur related to the IF-283 board (RS-232C Interface)
(When the DABK-7033 option is installed)

Error code	Error content	Error level	Assumed malfunctioning parts
8-02	Error in DATA BUS	4	• CN12 (SY-155 board) CN1 (RM-77 board) CN2 (RM-77 board) CN1 (IF-283 board) 30P flexible wire • IC1, 2, 3, 5 (RM-77 board) (SYS I/F circuit) • IC1 (IF-283 board) (SYS I/F circuit)

2-7-2. Remedy for error code "Error 2-05"

The SWP position DPG data and ATF playback AGC data are stored in the backup RAM of the SY-155A board. When the backup RAM is initialized if the SY-155A board's lithium battery is exhausted or the ROM chip has been improperly mounted, "Error 1-05" (backup memory destroyed) as well as "Error 2-05" occurs. In this case, write both servo-data into the backup RAM in the following way.

Procedure

Step 1. Opening the test menu in the service menu

(1) Press the SET key while holding down the STOP key and the DISPLAY key. The service menu opens.

"[dSPLY] cLoSE"

(2) While pressing the MENU key, turn the search dial and set the following display.

"[tESt] cLoSE"

Next, while pressing the DATA key, turn the search dial and set the display to "oPEn", and press the SET key. The test menu in the service menu opens.

"[tESt] oPEn"

(3) While pressing the MENU key, turn the search dial and set the following display.

"[trnSP] cLoSE"

Next, while pressing the DATA key, turn the search dial and set the display to "oPEn", and press the SET key. The servo menu in the test menu opens.

"[trnSP] oPEn"

Step 2. Writing the DPG data into RAM

(1) While pressing the MENU key, turn the search dial and set the following display.

"dPG Adj 00 oFF"
↑
└── DPG data

(2) Insert the test tape TY-7111D, and press the PLAY key to put it in the playback mode.

(3) While pressing the DATA key, turn the search dial and set the display to "on", and press the SET key.

(4) If the DPG data is other than 00, while pressing the DATA key, turn the search dial and set the display to "oFF", and press the SET key.
The DPG data is read into the backup RAM.
DPG data's guideline : 5 * to 6 *

Step 3. Writing the AGC data into RAM

(1) While pressing the MENU key, turn the search dial and set the following display.

"AGc Adj 00 00 oFF"
↑
└── AGC data

(2) Insert the test tape TY-7111D, and press the PLAY key to put it in the playback mode.

(3) While pressing the DATA key, turn the search dial and set the display to "on", and press the SET key.
The display will change from being lit steadily to flashing, and begin automatic adjustment.

(4) If the display changes from flashing to being lit steadily, while pressing the DATA key, turn the search dial and set the display to "oFF", and press the SET key.
The AGC data is read into the backup RAM.
If an "Error" display appears, perform steps (3) and (4) above.
AGC data guideline : 1 * to 2 *

Step 4. Confirmation

(1) After turning the power off, turn it on again. Confirm that "ERROR 1-05" or "ERROR 2-05" are not displayed.

(2) Playback a pre-recorded (music sound) tape. Confirm that the SERVO indicator of the front panel is lit, and that the sound is coming out.

(3) Record the audio signals in the assemble mode. After recording, playback the tape.
Confirm that the SERVO indicator of the front panel is lit, and that the sound is coming out.

Note : If "ERROR 1-05" incessantly occurs, the lithium battery may be exhausted. In this case, it is necessary to replace it.

2-8. SERVICE MENU

The SERVICE MENU consists of the following two submenus.

DISPLAY MENU : Displays data such as the hour meter and FS counter.

TEST MENU : Execute self-diagnosis and each adjustment mode.

You can enter/exit (OPEN/CLOSE) the SERVICE MENU using the STOP, DISPLAY, SET, and RESET keys on the front panel as follows.

To enter the SERVICE MENU

Press the STOP, DISPLAY, and SET keys simultaneously (press all three keys at the same time). When you enter the SERVICE MENU, the first item of the SERVICE MENU will appear on the FL tube display.

FL tube display message : [dSPLY] cLoSE

To exit the SERVICE MENU

Press the STOP, DISPLAY, and RESET keys simultaneously (press all three keys at the same time).

Notes :

- The OPEN/CLOSE status of the SERVICE MENU and the SERVICE MENU settings will not be stored in the backup memory.
  In other words, all settings are canceled when you turn OFF the power.

- When you turn ON the power, the SERVICE MENU status will be CLOSE.
  You can set and modify each item in the SERVICE MENU (DISPLAY MENU and TEST MENU) using the MENU, SET, RESET, and DATA keys and the SEARCH dial on the front panel. The setting data will be displayed in the Tape Time Area and Work Area of the FL tube display.

The SERVICE MENU follows the SETUP MENU in the menu hierarchy.

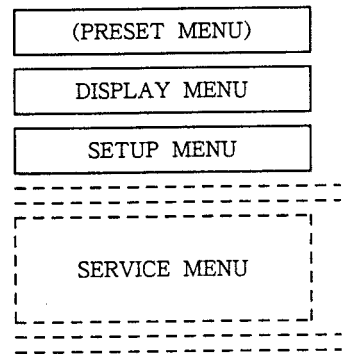

Head nomenclature

The four heads on the drum of this unit, as in the diagram below, include two Leading system heads (heads A and B) and two Trailing system (heads A' and B').

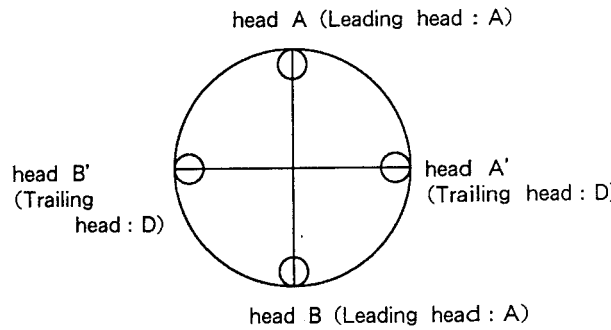

The nomenclature for these is as below :

	nomenclature
+ (plus) azimuth head	: A and A'
− (minus) azimuth head	: B and B'

Leading head : (A-A, A-B) or (A, B)

Trailing head : (D-A, D-B) or (A', B')

2-8-1. SERVICE MENU Structure

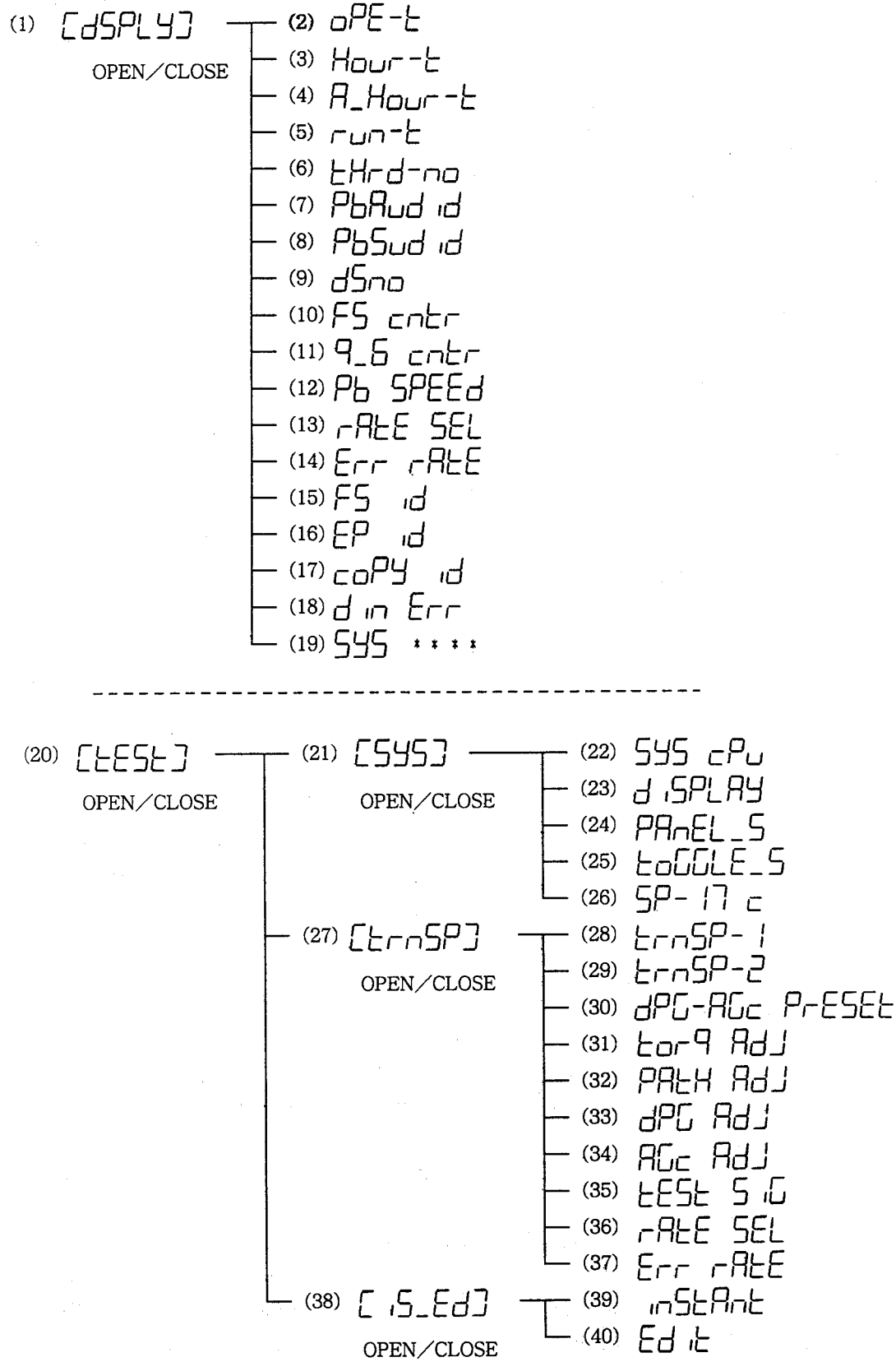

2-8-2. SERVICE MENU items

(1) [dSPLY] (Display)

Selects/cancels (OPEN/CLOSE) DISPLAY MENU items ((2) to (19)) in the SERVICE MENU.

Specification conditions : None

Specification method :

Hold down the DATA key and turn the SEARCH dial. Then, press the SET key to specify OPEN /CLOSE.

1) Enter (OPEN) the SERVICE MENU.
   FL tube display message : [dSPLY] cLoSE

To select (OPEN) a DISPLAY MENU item

2) Hold down the DATA key and turn the SEARCH dial until the following message appears. Then, press the SET key.
   FL tube display message : [dSPLY] oPEn (flashing → ON)
3) After you enter (OPEN) the DISPLAY MENU, hold down the MENU key and turn the SEARCH dial to select the required DISPLAY MENU item ((2) to (18)). (Turn the dial until the required item appears on the FL tube display.)

To cancel (close) a DISPLAY MENU item

2) Hold down the DATA key and turn the SEARCH dial until the following message appears. Then, press the SET key.
   FL tube display message : [dSPLY] cLoSE (flashing → ON)

The DISPLAY MENU items ((2) to (18)) are listed below. After you enter (OPEN) the DISPLAY MENU, hold down the MENU key and turn the SEARCH dial to select the required DISPLAY MENU item ((2) to (18)). (Turn the dial until the required item appears on the FL tube display.)

Uses of the DISPLAY MENU items

HOUR METER : "oPE-t," "Hour-t," "run-t," and "thrd-no"
- Indicates the time to perform head cleaning and time to replace the drum, mechanism deck, and cassette compartment.

PB MAIN ID : "Pb Aud id"
- Main ID data during CAUTION 1-01 (main ID invalid).
- Copy ID data.

PB SUB ID : "Pb Sub id"
- Sub-ID data during CAUTION 1-02 (sub-ID invalid).

FS COUNTER : "Fs cntr"
- Checks the EXT SYNC (the input Fs can be counted backward using the display data).

9.6K COUNTER : "9.6 cntr"
- Checks the VARI control clock to be input from REMOTE 37P (the input signal frequency is counted backward using the display data).

ERROR RATE : "Err rAtE"
- Error rate when the PB CONDITION TALLY (when the SET UP PB COND : BAD CONDITION is set) turns ON (lights when the condition deteriorates beyond 8×10^{-2}).
- Measurement after replacing a drum and mechanism deck.
- Measurement after servo-related adjustments (torque, tape path, DPG, AGC).
- Measurement after RF-related adjustments (recording current, RF PLL).

FS ID : "Fs id"
- Fs (Sampling frequency) ID data

EMPHASIS ID : "EP id"
- EMPHASIS ID data

COPY ID : "coPY id"
- COPY ID data

DIN ERROR : "din Err"
- Error cause for flashing "D-I" message on FL tube display
- Pro/consumer data of input digital audio signal

(2) oPE-t (Operation Time) : Current-carrying hour meter.

Displays the current-carrying time of the unit (total time during which the unit's power was ON) in the Work Area of the FL tube display.

FL tube display message (Work Area) :

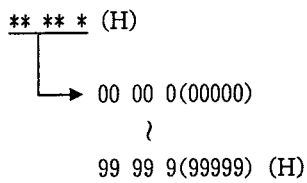

Factory setting :00 00 0(00000)

(3) Hour-t (Hour Time) : Drum rotation hour meter

Displays the hours for which a drum has rotated in the Work Area of the FL tube display. Use this as guideline to replace the drum assembly.

FL tube display message (Work Area) :

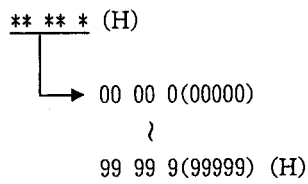

Factory setting :00 00 0(00000)

(4) A-Hour-t (Additional Integrated Hour Meter) : Drum rotation hour meter

Displays the total time for which a drum has rotated in the Work Area of the FL tube display.

FL tube display message (Work Area) :

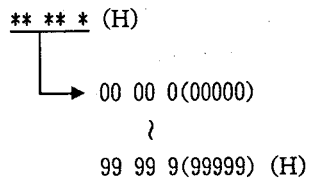

Factory setting :00 00 0(00000)

(5) run-t (Running Time) : Tape running hour meter

Displays the total time for which a tape was running in the Work Area of the FL tube display.

FL tube display message (Work Area) :

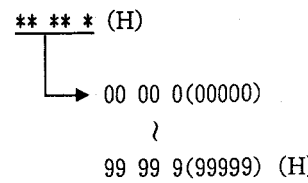

Factory setting :00 00 0(00000)

(6) tHrd-no (Threading Number) : Meter for the threading / unthreading operation of a tape

Displays the total number of threading and unthreading operations of a tape in the Work Area of the FL tube display.

FL tube display message (Work Area) :

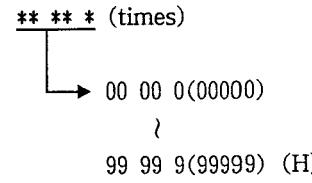

Factory setting :00 00 0(00000)

(7) PB Aud id (PB Main ID Data)

Displays the main ID data recorded on the playback tape in the Work Area of the FL tube display.

FL tube display message (Work Area) :

$$\frac{*}{⑧}\ \frac{*}{⑦}\ \frac{*}{⑥}\ \frac{*}{⑤}\ \frac{*}{④}\ \frac{*}{③}\ \frac{*}{②}\ \frac{*}{①}$$

No.	ID Name	Display	Description
①	Format ID	0 1 2 3	AUDIO USE Reserved Reserved Reserved
②	ID1, Emphasis	0 1 2 3	OFF 50/15 μ sec Reserved Reserved
③	ID2, Fs	0 1 2 3	48kHz 44.1kHz 32kHz Reserved
④	ID3, Number of channel	0 1 2 3	2channels 4channels Reserved Reserved
⑤	ID4, Quantization	0 1 2 3	16-bits linear 12-bits non linear Reserved Reserved
⑥	ID5, Track pitch	0 1 2 3	Normal Wide Reserved Reserved
⑦	ID6, Copy	0 1 2 3	Permitted Reserved Prohibited Pre recorded
⑧	ID7, pack contents	—	—

(8) Pb Sub id (PB Sub ID Data)

Displays the sub-ID data recorded on the playback tape in the Work Area of the FL tube display.

FL tube display message (Work Area) :

$$-\ \frac{*}{④}\ \frac{*}{③}\ \frac{*}{②}\ -\ \frac{*}{①}\ \frac{*}{⑥}\ \frac{*}{⑤}$$

No.	ID Name	Display	Description
①	Data ID	0	When 0, it has the meaning of ② ③ ④ below When not 0, it is invalid.
②	Control ID	4-bit Hex.	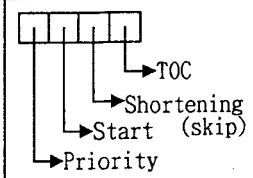
③	Pack ID	0 ~ 7	Number of recorded packs.
④	P No.	000 ~ 799 0AA 0BB 0EE	program number invalid lead in area lead out area (END ID)

(9) dSno (Sample Number)

Displays the difference between TAGET TC and PB TC by a word unit on the FL tube display.

FL tube display message (Work Area) :

Sign 0 0 0 ** ** (Word)

When the difference exceeds FFFFH, the data will flash.

(10) FS cntr (Fs Counter)

Displays the counter data of the EXT SYNC signal in the Work Area of the FL tube display.

FL tube display message (Work Area) :

- - - - * * * * (Hex.)

$$\text{Fs counter (Hex.)} = \frac{\text{Counter clock frequency (Hz)} \times 256}{\text{EXT clock frequency (Hz)}}$$

Counter clock (128Fs) 48kHz : 6.1440MHz
44.1kHz: 5.6448MHz

(11) 9.6 cntr (9.6K Counter)

Displays the counter data of the 9.6K clock signal input from the remote 37P in the Work Area of the FL tube display.

FL tube display message (Work Area) :

$\underset{②}{****}$ $\underset{①}{****}$ (HEX)

①Moving average of the 9.6K counter (average for 8 times)
②9.6K counter value

$$\text{9.6K counter (Hex.)} = \frac{\text{Counter clock frequency (Hz)} \times 256}{\text{9.6K clock frequency (Hz)}}$$

Counter clock (32Fs) 48kHz : 1.536MHz
44.1kHz: 1.4112MHz

(12) Pb SPEEd (PB Speed)

Displays the VARI speed data executed during VARI mode in the Work Area of the FL tube display.

FL tube display message (Work Area) :

Sign ** *%

Example of message : -12 5→-12.5%

(13) rAtE SEL (Error Rate Select)

Selects and sets the head (Leading or Trailing) and channel (A or B) whose playback data will be used during Err rAtE (error rate is displayed).

Specification conditions :

The "tEST SiG" of the STOP mode and test menu must be OFF.

Specification method :

Hold down the DATA key and turn the SEARCH dial to display the required item on the FL tube display. Then, press the SET key. The items to be selected are listed below.

Display	Playback data to be selected
Auto	Complies with the recording system mode (RAW/RMW). • RMW : Average of Leading head A and B channels • RAW : Average of Trailing head A and B channels
d-Ab	Average of Trailing head A and B channels
d-A	Trailing head A channel
d-b	Trailing head B channel
A-Ab	Average of Leading head A and B channels
A-A	Leading head A channel
A-b	Leading head B channel

When you press the SET key, the display data will be selected (flashing → ON).

Note : When you select data besides "Auto," the ALARM indicator on the front panel will flash.

(14) Err rAtE (Error Rate)

Displays the error rate calculated from the playback data of the head and channel selected in the "rAtE SEL" menu, in the Work Area of the FL tube display. (Ignore fractions following two decimal places.)

FL tube display message (Work Area) :

_-* ($=*.* \times 10^{-*}$)

Example of message : 1_0-4→1.0×10^{-4}

Note : No error rate will be displayed for invalid measurement data. Only a dashed line (- - - - - - -) will appear.

(15) FS id (Fs ID) : Displays each Fs ID in the Work Area of the FL tube display.

FL tube display message (Work Area) :

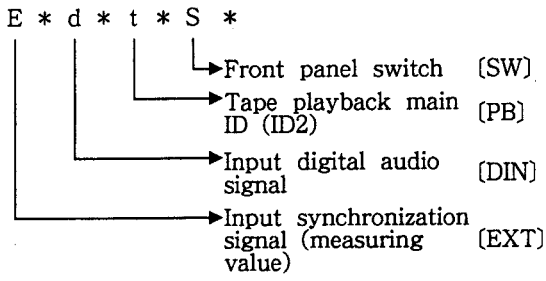

* : "8" 48kHz
"4" 44.1kHz
"0" 44.056kHz
"3" 32kHz
"-" Settings other than above.

(16) EP id (EMPHASIS ID) : Displays each EMPHASIS ID in the Work Area of the FL tube display.

FL tube display message (Work Area) :

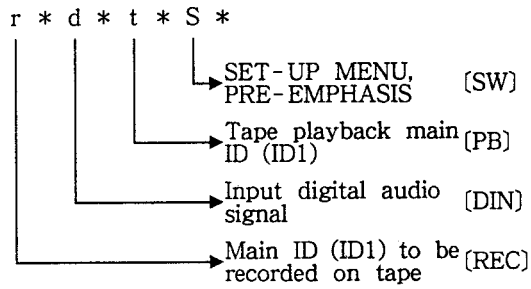

* : "0" OFF
"1" 50/15 μ sec ON
"2" CCITT ON
"-" Settings other than above.

(17) coPY id (COPY ID) : Displays each COPY ID in the Work Area of the FL tube display.

FL tube display message (Work Area) :

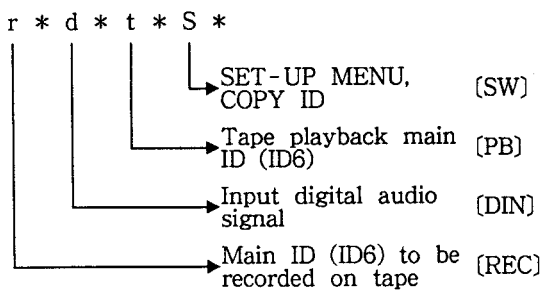

* : "0" Allowed
"2" Inhibited
"3" Pre-recorded

(18) din Err (DIN ERROR) : Displays (in the Work Area of the FL tube display) the error cause for the flashing "D-I" message on the FL tube as well as the pro/consumer data of input digital audio signal.

FL tube display message (Work Area) :

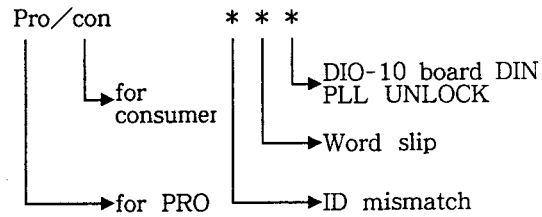

* : "0" No occurrence
"1" Occurrence

(19) SYS * * * * (SYSCOM RAM data) : Displays the system component RAM data (64k byte) in the Work Area of the FL tube display.

FL tube display message (Work Area) :

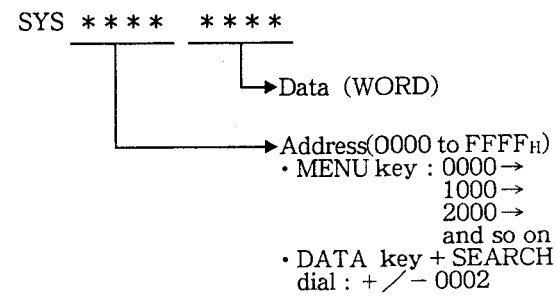

(20) [tEST] (Test)

Selects / cancels (OPEN / CLOSE) the TEST MENU items in the SERVICE MENU.

Specification conditions : None

Specification method :

Hold down the DATA key and turn the SEARCH dial. Then, press the SET key to specify OPEN /CLOSE.

1) Enter (OPEN) the SERVICE MENU.
FL tube display message : [dSPLY] cLoSE

To select (OPEN) a TEST MENU item

2) Hold down the MENU key and turn the SEARCH dial until the following message appears.
FL tube display message : [tESt] cLoSE

3) Hold down the DATA key turn the SEARCH dial until the following message appears. Then, press the SET key.
FL tube display message : [tESt] oPEn
(flashing → ON)

To cancel (close) a TEST MENU item

2) Hold down the DATA key and turn the SEARCH dial until the following message appears. Then, press the SET key.
FL tube display message : [tESt] cLoSE
(flashing → ON)

(21) [SYS] (System control)

Selects/cancels (OPEN/CLOSE) the System control related test items in the TEST MENU. The test items are: (22) SYS cPu, (23) diSPLAY, (24) PAnEL-S, (25) toGGLE-S, and (26) SP-17c.

Specification conditions : None

Specification method :

Hold down the DATA key and turn the SEARCH dial. Then, press the SET key to specify OPEN /CLOSE.

1) Enter (OPEN) the SERVICE MENU.
2) Enter (OPEN) the TEST MENU.
FL tube display message : [tESt] oPEn

To select (OPEN) a TEST MENU item

3) Hold down the MENU key and turn the SEARCH dial until the following message appears.
FL tube display message : [SYS] cLoSE
4) Hold down the DATA key and turn the SEARCH dial until the following message appears. Then, press the SET key.
FL tube display message : [SYS] oPEn
(flashing → ON)
5) After System control is executed (OPEN), hold down the MENU key and turn the SEARCH dial to select the required test item ((22) to (26)).

To cancel (close) a TEST MENU item

6) Hold down the DATA key and turn the SEARCH dial until the following message appears. Then, press the SET key.
FL tube display message : [SYS] cLoSE
(flashing → ON)

The TEST MENU items ((22) to (26)) are listed below. After you enter (OPEN) the [SYS] MENU, hold down the MENU KEY AND turn the SEARCH dial to select the required TEST MENU item. (Turn the dial until the required item appears on the FL tube display.)

(22) [SYS cPu] (System control CPU)

Tests the address bus, data bus, ROM, and RAM of the System control CPU.

Specification conditions : STOP mode

Specification method :

Start/cancel the test mode using the SET, DATA, and RESET keys.

1) Enter (OPEN) the SERVICE MENU.
2) Enter (OPEN) the TEST MENU ([tESt]).
3) Enter (OPEN) the [SYS] MENU.
FL tube display message : [SYS] oPEn
4) Hold down the MENU key and turn the SEARCH dial until the following message is displayed.
FL tube display message : [SYS cPu] tESt
(rapid flashing)

Starting the test

5) Press the SET key.
The display message "tESt" will flash at a slower speed than before, indicating the start of the test.
(Approximately 6 seconds)
6) After the test ends, the results appear in the Work Area of the FL tube display.
Results (Work Area of the FL tube display) :

Result	Work Area Display
①No error	no Error
②Error	* * * * * * * * → Address bus → Data bus → ROM → RAM When an error is detected, a "1" is indicated at the corresponding position.

Canceling the test

7) Press the DATA and RESET keys simultaneously.
   The display message "tESt" will flash at a higher speed than before, indicating the suspension of the test.

(23) [diSPLAY] (Display Test)

Tests the FL tube display and indicator lamps.

Specification conditions : STOP mode

Specification method :

Start/cancel the test mode using the SET, DATA, and RESET keys.

1) Enter (OPEN) the SERVICE MENU.
2) Enter (OPEN) the TEST MENU ([tESt]).
3) Enter (OPEN) the [SYS] MENU.
   FL tube display message : [SYS] oPEn
4) Hold down the MENU key and turn the SEARCH dial until the following message appears.
   FL tube display message : diSPLAY tESt (rapid flashing)

Starting the test

5) Press the SET key.
6) The FL tube display and the LED indicator lamps of the front panel will light in the following sequence (cycle).
   ① All lamps will turn ON. →② The LED indicator lamps will turn ON one after another. →③ The segments (0 to 31) of the FL tube display will turn ON one after another. →④ The grids (0 to 7) of the FL tube display will turn ON one after another. →①
   During the test mode, the FL tube display and indicator lamps will light in the above cycle ① to ④. (Approximately 40 seconds per cycle)

Canceling the test

7) Press the DATA and RESET keys simultaneously.

(24) [PAnEL-S] (Panel Switch Test)

Tests the connections of each front panel key switch.

Specification conditions : STOP mode

Specification method :

Start/cancel (stop) the test mode using the SET, DATA, and RESET keys.

1) Enter (OPEN) the SERVICE MENU.
2) Enter (OPEN) the TEST MENU ([tESt]).
3) Enter (OPEN) the [SYS] MENU.
   FL tube display message : [SYS] oPEn
4) Hold down the MENU key and turn the SEARCH dial until the following message appears.
   FL tube display message : PanEL tESt (rapid flashing)
5) Press the SET key.
6) Test method
   Press all 27 key switches on the front panel one by one. If the bit corresponding to each key switch displayed in the Work Area of the FL tube display is a "1," that key is good. (See the table below.)
   After you press all keys, the test results will be displayed in the Work Area of the FL tube display.
   Results (Work Area on the FL tube display) :

Result	Work Area Display
No error	no Error
Error	−＊ ＊＊ ＊＊ ＊＊ (HEX) ⑦ ⑥⑤ ④③ ②① When data displayed in HEX is converted to binary, the key switches that correspond to the bits that have become 0 are inoperative. example F FF FF dF (HEX display) ②↓ 1101 (Binary display) ↓ bit5 is 0 ↓ CUE switch is inoperative

Canceling the test

7) Press the DATA and RESET keys simultaneously.

Corresponding table for bits and key switch

−＊ ＊＊ ＊＊ ＊＊ (Hex.)
⑦ ⑥⑤ ④③ ②①

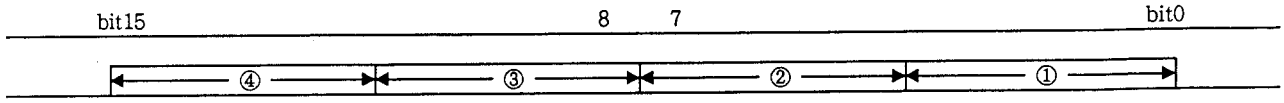

bit NO.	Key switch
bit0	EJECT ▲
1	STOP ■
2	STANDBY |▶|
3	FF ▶▶
4	REW ◀◀
5	CUE
6	PLAY ▶
7	REC ●
8	SID WRITE
9	SID ERASE
10	SID NEXT ▶▶|
11	SID PREVIOUS |◀◀
12	LOCATE
13	VARI
14	CHASE
15	MONITOR

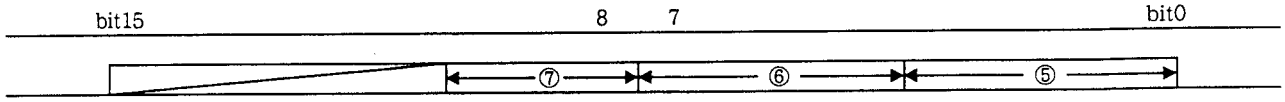

bit NO.	Key switch
bit0	MARK
1	DISPLAY
2	MENU
3	DATA
4	SET
5	RESET
6	MEMORY START
7	SUB INSERT
8	AUDIO INSERT
9	ASSEMBLE
10	SPOT ERASE

(25) [toGGLE-S] (Toggle Switch Test)

Tests the connections of the toggle switch and SEARCH dial on the front panel ; of the TC EXT/INT switch (when it is installed with the optional DABK-7030) and D-I/WORD switch on the rear panel.

Specification conditions : STOP mode

Specification method :

Start/cancel the test mode using the SET, DATA, and RESET keys.

1) Enter (OPEN) the SERVICE MENU.
2) Enter (OPEN) the TEST MENU ([tESt]).
3) Enter (OPEN) the [SYS] MENU.
   FL tube display message : [SYS] oPEn
4) Hold down the MENU key and turn the SEARCH dial until the following message appears.
   FL tube display message : toGGLE-S tESt
   (rapid flashing)
5) Press the SET key.
6) Test method
   ①Switch the front panel toggle switch (REMOTE/LOCAL, EXT/INT, ANALOG/DIGITAL, FS 44.1K/FS 48K).
   ②Turn the SEARCH dial in both directions.
   ③Switch the D-I/WORD switch on the connector panel.
   ④Switch the TC INT/EXT switch on the connector panel.
7) The test results will be displayed in the Work Area of the FL tube display as shown in the table below.

Results (Work Area on the FL tube display) :

Result	Work Area Display
No error	no Error
Error	– – – – * * * * (Hex.) ④ ③ ② ① When data displayed in HEX is converted to binary, the key switches that correspond to the bits that have become 0 are inoperative.

Corresponding table for bits and key switches

– – – – * * * * (Hex.)
④③②①

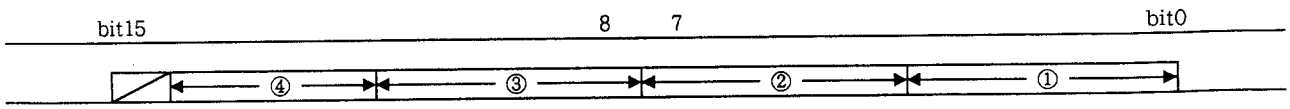

bit NO.	Key switch
bit0	REMOTE
1	LOCAL
2	EXT
3	INT
4	VIDEO
5	ANALOG
6	DIGITAL
7	FS 44.1K
8	FS 48K
9	DIAL FWD (clockwise)
10	DIAL REV (counter clockwise)
11	WORD (DIO OPTION)
12	DI (DIO OPTION)
13	TC INT (TC OPTION)
14	TC EXT (TC OPTION)

(26) SP-17c (SP-17C Test) : Checks the SP-17C board used for the SYNC REC mode.

Specification conditions :

- STOP modes
- The SP-17C board must be installed (no testing is required if the MEM-40C (DABK-7055 option) board is installed).

Specification method :

Use the SET, DATA, and RESET keys to start and cancel the test.

1) Enter (OPEN) the SERVICE MENU.
2) Enter (OPEN) the TEST MENU.
3) Select (OPEN) the [SYS] mode.
   FL tube display message : [SYS] oPEn
4) Hold down the MENU key and turn the SEARCH dial until the following message appears.
   FL tube display message : [SP-17c] tESt
5) Press the SET key.
   The Work Area message "tESt" will flash at a slower speed than before, indicating the start of the test.
6) After the test ends, the results will be displayed in the Work Area of the FL tube display.
   Results (Work Area of the FL tube display) :

Result	Work Area Display
No error	no Error
Error	* * → Address bus → Data bus The item corresponding to the bit containing a "1" is defective.

Canceling the test

7) Press the DATA and RESET keys simultaneously.

(27) [trnSP] (Transport)

Selects/cancels (OPEN/CLOSE) the mechanism deck and servo (SV) related test and adjustment items in the TEST MENU. The test items are : (28) trn SP-1,(29) trn SP-2,(30) dPG AGc,(31) torq Adj,(32) PAtH Adj,(33) dPC Adj,(34) AGc Adj,(35) tESt SiG,(36) rAtE SEL, and (37) Err rAtE.

Specification conditions : None

Specification method :

Hold down the DATA key and turn the SEARCH dial. Then, press the SET key to specify OPEN/CLOSE.

1) Enter (OPEN) the SERVICE MENU.
2) Enter (OPEN) the TEST MENU (tESt).
   FL tube display message : [tESt] oPEn

To select (OPEN) the Transport test item

3) Hold down the MENU key and turn the SEARCH dial until the following message appears.
   FL tube display message : [trnSP] cLoSE
4) Hold down the DATA key and turn the SEARCH dial until the following message appears. Then, press the SET key.
   FL tube display message : [trnSP] oPEn
   (flashing → ON)
5) After Transport is selected (OPEN), hold down the MENU key and turn the SEARCH dial to select the required test item ((28) to (37)).

To cancel (close) the Transport test item

6) Hold down the DATA key and turn the SEARCH dial until the following message is displayed. Then, press the SET key.
   FL tube display message : [trnSP] cLoSE
   The TEST MENU items ((28) to (37)) are listed below. After you enter (OPEN) the [trnSP] MENU, hold down the MENU key and turn the SEARCH dial to select the required Transport test item. (Turn the dial until the required item appears on the FL tube display.)

(28) [trn SP-1] (Transport-1)

Tests the cassette compartment, loading motor, drum motor, reel motor, and capstan motor operations.

Specification conditions :

No cassette (Do not insert a cassette.)

Specification method :

Start/cancel (stop) the test mode using the SET, DATA, and RESET keys.

1) Enter (OPEN) the SERVICE MENU.
2) Enter (OPEN) the TEST MENU ([tESt]).
3) Enter (OPEN) the [trnSP] MENU.
   FL tube display message : [trnSP] oPEn
4) Hold down the MENU KEY AND turn the SEARCH dial until the following message appears.
   FL tube display message : trnSP-1 tESt (rapid flashing)
5) Press the SET key without loading a cassette. The display message "tESt" will flash at a slower speed than before, indicating the start of the test.
6) Test method
   Load a cassette. When you load a cassette, the following operations are automatically checked. Cassette loading. → Cassette eject operation (checks the cassette compartment). → Loading operation. → Drum rotation operation. → Reel motor and capstan rotation operations. → End. These operation checks are started about 10 seconds after you load a cassette.
7) After the operations are checked, the test results will be displayed in the Work Area of the FL tube display as shown in the table below.
   Results (Work Area on the FL tube display) :

Result	Work Area Display
No error	no Error
Error	** ** ** ** ⑧⑦ ⑥⑤ ④③ ②① The tested item corresponding to the bit containing a "1" is defective. ①Cassette compartment ②Loading motor ③Brake ④Cassette hole sensor switch ⑤Take-up reel ⑥Supply reel ⑦Capstan motor ⑧Drum motor

Canceling the test
8) Press the DATA and RESET keys simultaneously.

(29) [trn SP-2] (Transport-2)
Tests the pinch roller operation.
Specification conditions :
No cassette (Do not insert a cassette.)
Specification method :
Start/cancel (stop) the test mode using the SET, DATA, and RESET keys.
1) Enter (OPEN) the SERVICE MENU.
2) Enter (OPEN) the TEST MENU ([tESt]).
3) Enter (OPEN) the [trnSP] MENU.
   FL tube display message : [trnSP] oPEn
4) Hold down the MENU key and turn the SEARCH dial until the following message appears.
   FL tube display message : trnSP-2 tESt (rapid flashing)
5) Press the SET key without loading a cassette. The display message "tESt" will flash at a slower speed than before, indicating the start of the test.
   The pinch roller will repeat loading and unloading operations 5 times.
Canceling the test
6) Press the DATA and RESET keys simultaneously.

(30) [dPG-AGc] (DPG-AGC Preset)
Presets the DPG and AGC data before performing the torque, tape path, DPG and AGC adjustments.
Specification conditions :
No cassette (Do not load a cassette.)
Specification method :
Preset the DPG and AGC data using the DATA and SET keys.
1) Enter (OPEN) the SERVICE MENU.
2) Enter (OPEN) the TEST MENU ([tESt]).
3) Enter (OPEN) the [trnSP] MENU.
   FL tube display message : [trnSP] oPEn

4) Hold down the MENU key and turn the SEARCH dial until the following message appears.
FL tube display message : dPG-AGc PrESEt
5) Press the DATA and SET keys simultaneously. The DPG data (60 (H)) and AGC data (A channel : 20 (H), and B channel : 20 (H)) will be set.

(31) [torq Adj] (Torque Adjustment)

To perform the reel torque adjustment, use this menu to specify the adjustment mode. Use this menu also to display the speed during the CUE mode.

Specification conditions : None

Specification method :

Hold down the DATA key and turn the SEARCH dial. Then, press the SET key to turn ON/OFF the adjustment mode.

1) Enter (OPEN) the SERVICE MENU.
2) Enter (OPEN) the TEST MENU ([tESt]).
3) Enter (OPEN) the [trnSP] MENU.
FL tube display message : [trnSP] oPEn
4) Hold down the MENU key and turn the SEARCH dial until the following message appears.
FL tube display message : torq Adj oFF
5) Hold down the DATA key and turn the SEARCH dial until the following message appears.
FL tube display message : torq Adj on
6) Press the SET key to turn ON the adjustment mode. Perform each torque adjustment under this condition. See section 4-3. Mechanism Adjustment for the adjustment methods.

Note : When you set the adjustment mode to ON, the ALARM indicator on the front panel will flash.

Setting the adjustment mode OFF

1) Hold down the DATA key and turn the SEARCH dial until the following message appears. Then, press the SET key.
FL tube display message : torq Adj oFF

The Work Area of the FL tube display indicates the speed during the CUE mode besides the ON /OFF data of the test mode.

Data (Work Area of the FL tube display) :

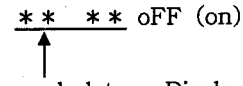

- Other than the CUE mode : - - - -
- STILL mode : 0
- (-) 1/5 : (-) 0_2
- (-) 1/2 : (-) 0_5
- (-) 1 : (-) 1
- (-) 3 : (-) 3
- (-) 8 : (-) 8
- (-) 16 : (-) 16

(32) [PAtH Adj] (Path Adjustment)

To perform the tape path adjustment, use this menu to specify the adjustment mode.

Specification conditions : None

Specification method :

Hold down the DATA key and turn the SEARCH dial. Then, press the SET key to turn ON/OFF the adjustment mode.

1) Enter (OPEN) the SERVICE MENU.
2) Enter (OPEN) the TEST MENU ([tESt]).
3) Enter (OPEN) the [trnSP] MENU.
FL tube display message : [trnSP] oPEn
4) Hold down the MENU key and turn the SEARCH dial until the following message appears.
FL tube display message : PatH Adj oFF
5) Hold down the DATA key and turn the SEARCH dial until the following message appears.
FL tube display message : PatH Adj on
6) Press the SET key to turn ON the adjustment mode.

Perform each tape path adjustment under this condition. See section 4-4. Tape Path Adjustment for the adjustment methods.

Note : When you set the adjustment mode to ON, the ALARM indicator on the front panel will flash.

Setting the adjustment mode OFF

7) Hold down the DATA key and turn the SEARCH dial until the following message appears. Then, press the SET key.
   FL tube display message : PatH Adj oFF

(33) [dPG Adj] (DPG Adjustment)

To perform the SWP adjustment of the servo block, use this menu to specify the adjustment mode. The adjusted data is stored in the backup memory of System control when you set the adjustment mode to OFF.

Specification conditions : None

Specification method :

Hold down the DATA key and turn the SEARCH dial. Then, press the SET key to turn ON/OFF the adjustment mode.

1) Enter (OPEN) the SERVICE MENU.
2) Enter (OPEN) the TEST MENU ([tESt]).
3) Enter (OPEN) the [trnSP] MENU.
   FL tube display message : [trnSP] oPEn
4) Hold down the MENU key and turn the SEARCH dial until the following message appears.
   FL tube display message : dPG Adj oFF
5) Hold down the DATA key and turn the SEARCH dial until the following message appears.
   FL tube display message : dPG Adj on
6) Press the SET key to turn ON the adjustment mode. Perform the SWP adjustment under this condition. See the section 4-5. Servo Block Adjustment for the adjustment methods.

Note : When you set the adjustment mode to ON, the ALARM indicator on the front panel will flash.

Setting the adjustment mode OFF

7) Hold down the DATA key and turn the SEARCH dial until the following message appears. Then, press the SET key.
   FL tube display message : dPG Adj ** oFF
   Data stored in the backup memory.

After the adjustment, the adjusted data will be stored in the backup memory when you set the adjustment mode to OFF. The stored data will be displayed in the Work Area of the FL tube display.

Data (Work Area of the FL tube display) :

** oFF
Data stored in the backup memory.

(34) [AGc Adj] (AGC Adjustment)

Performs the gain adjustment of the AGC. When you set this adjustment mode to ON, the SV CPU will automatically perform the adjustment. The adjusted gain data will be stored in the backup memory of System control.

Specification conditions : None

Specification method :

Turn ON/OFF the adjustment mode using the SET, DATA, and RESET keys.

1) Enter (OPEN) the SERVICE MENU.
2) Enter (OPEN) the TEST MENU ([tESt]).
3) Enter (OPEN) the [trnSP] MENU.
   FL tube display message : [trnSP] oPEn
4) Hold down the MENU key and turn the SEARCH dial until the following message appears.
   FL tube display message : AGc Adj oFF
5) Hold down the DATA key and turn the SEARCH dial until the following message appears.
   FL tube display message : AGc Adj on
6) Press the SET key to turn ON the adjustment mode. When you press the SET key, the gain adjustment of AGC will start automatically. See the section 4-5. Servo Block Adjustment for adjustment methods.

Note : When you set the adjustment mode to ON, the ALARM indicator on the front panel will flash.

Setting the adjustment mode OFF

7) Hold down the DATA key and turn the SEARCH dial until the following message appears. Then, press the SET key.

FL tube display message : AGC Adj **** oFF

Data stored in the backup memory.

After the adjustment, the adjusted data will be stored in the backup memory when you set the adjustment mode to OFF. The stored data will be displayed in the Work Area of the FL tube display.

Data (Work Area of the FL tube display) :

** **oFF

Data stored in the backup memory.

(35) tESt SiG (Test Signal)

Selects the test signal to be recorded. The selected signals will be recorded using the REC and PLAY keys.

Specification conditions :

- Insert a cassette (the cassette with the tab hole open).
- Exclude software tapes.
- STOP mode.
- Set the test menu "rAtE SEL" to the "Auto".

Specification method :

Hold down the DATA key and turn the SEARCH dial. Then, press the SET key to set the test signal.

1) Enter (OPEN) the SERVICE MENU.
2) Enter (OPEN) the TEST MENU ([tESt]).
3) Enter (OPEN) the [trnSP] MENU.
   FL tube display message : [trnSP] oPEn
4) Hold down the MENU key and turn the SEARCH dial until the following message appears.
   FL tube display message : tESt SiG OFF
5) Hold down the DATA key and turn the SEARCH dial until the required test signal appears in the Work Area of the FL tube display. Then, press the SET key.
   When you press the SET key, the Work Area message will light without flashing.

Work Area Display	Signal to be recorded
1) oFF	—
2) A-A 157	Leading head A ch 1.57M
3) A-b 157	Leading head B ch 1.57M
4) d-A 157	Trailing head A ch 1.57M
5) d-b 157	Trailing head B ch 1.57M
6) A-47 157	Leading head A ch 4.7M B ch 1.57M
7) A- 157 47	Leading head A ch 1.57M B ch 4.7M
8) d-47 157	Trailing head A ch 4.7M B ch 1.57M
9) d- 157 47	Trailing head A ch 1.57M B ch 4.7M
10) A- 13 157	Leading head A ch 130K B ch 1.57M
11) A- 157 13	Leading head A ch 1.57M B ch 130K
12) d- 13 157	Trailing head A ch 130K B ch 1.57M
13) d- 157 13	Trailing head A ch 1.57M B ch 130K
14) A-tSt in	Leading head TEST INPUT
15) d-tSt in	Trailing head TEST INPUT
16) A- inPut	Leading head NORMAL INPUT
17) d- inPut	Trailing head NORMAL INPUT

Note : If you do not set the [tESt SiG] mode to OFF (Step 4), the ALARM indicator on the front panel will flash.

(36) rAtE SEL (Error Rate Select)

Same as the "rAtE SEL" menu item in the DISPLAY MENU.

(37) Err rAtE (Error Rate)

Same as the "Err rAtE" menu item in the DISPLAY MENU.

(38) [iS-Ed] (Instant-Edit)

Enters/exits (OPEN/CLOSE) the test menus of the MEMORY START memory and EDIT MEMORY option board.

Specification conditions : Option board must be installed.

Specification method :

Hold down the DATA key and turn the SEARCH dial. Then, press the SET key to OPEN/CLOSE the mode.

1) Enter (OPEN) the SERVICE MENU.
2) Enter (OPEN) the TEST MENU ([tESt]).
   FL tube display message : [tESt] oPEn

Starting (OPEN) the [iS-Ed] mode

3) Hold down the MENU key and turn the SEARCH dial until the following message appears.
   FL tube display message : [iS-Ed] cLoSE
4) Hold down the DATA key and turn the SEARCH dial until the following message appears. Then, press the SET key.
   FL tube display message : [iS-Ed] oPEn (flashing → ON)
5) After the mode is OPEN, hold down the MENU key and turn the SEARCH dial to select either (39)"inStAnt" or (40)"Edit" menu.

Ending (CLOSE) the [iS-Ed] mode

6) Hold down the DATA key and turn the SEARCH dial until the following message appears. Then, press the SET key.
   FL tube display message : [iS-Ed] cLoSE

The TEST MENU items ((39) and (40)) are listed below. After you start the [iS-Ed] MENU (OPEN), hold down the MENU key and turn the SEARCH dial to select the required TEST MENU item. (Turn the dial until the required item appears on the FL tube display.)

(39) [inStAnt] (Instant Test)

Tests the memory used for MEMORY START.

Specification conditions : STOP mode

Specification method :

Start/cancel the test using the SET, DATA, and RESET keys.

1) Enter (OPEN) the SERVICE MENU.
2) Enter (OPEN) the TEST MENU ([tESt]).
3) Enter (OPEN) the [iS-Ed] MENU.
   FL tube display message : [iS-Ed] oPEn
4) Hold down the MENU key and turn the SEARCH dial until the following message appears.
   FL tube display message : inStAnt tESt (rapid flashing)

Starting the test

5) Press the SET key.
   The Work Area message "tESt" will flash at a slower speed than before, indicating the start of the test.
6) After the test ends, the results will be displayed in the Work Area of the FL tube display.
   Results (Work Area of the FL tube display) :

Result	Work Area Display
No error	no Error
Error	* * * * Address bus Data bus DRAM The item corresponding to the bit containing a "1" is defective.

Caution : When you perform this test, the audio data stored in the memory will be lost.

Canceling the test

7) Press the DATA and RESET keys simultaneously.

(40) Edit (Edit Test) : Tests the EDIT MEMORY.

Specification conditions :

- STOP mode
- The MEM-40C board must be installed (the optional DABK- 7055 must be installed).

Specification method :

Start/cancel the test using the SET, DATA, and RESET keys.

1) Enter (OPEN) the SERVICE MENU.
2) Enter (OPEN) the TEST MENU ([tESt]).
3) Enter (OPEN) the [iS-Ed] MENU.
   FL tube display message : [iS-Ed] oPEn
4) Hold down the MENU key and turn the SEARCH dial until the following message appears.
   FL tube display message : Edit tESt (rapid flashing)

Starting the test

5) Press the SET key.
   The Work Area message "tESt" will flash at a slower speed than before, indicating the start of the test.
6) After the test ends, the results will be displayed in the Work Area of the FL tube display.
   Results (Work Area of the FL tube display) :

Result	Work Area Display
No error	no Error
Error	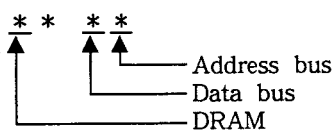 The item corresponding to the bit containing a "1" is defective.

Caution : When you perform this test, the audio data stored in the memory will be lost.

Canceling the test

7) Press the DATA and RESET keys simultaneously.

2-9. Tools and Instruments

Item	Part No.	Remarks
Adjustment mirror	J-6080-029-A	For tape pass adjustment
Spare mirror	J-6080-030-1	For tape pass adjustment
Thickness gauge	9-911-053-00	For spacing check
Cassette weight	J-6224-140-A	For tape pass adjustment
Cleaning cassette DT-10CL	——	For head cleaning (Sony product)
Adjustment driver	J-6225-100-A	For tape pass adjustment
Test tape TY-7111D	8-909-820-00	For playback level check
Test tape TY-7251	8-909-813-00	For tracking adjusutment
Test tape TY-7212	8-960-081-01	For error rate check
Blank tape TY-30B	8-892-358-00	For recording level adjustment
Torque meter TW-7131	8-909-708-71	For FWD and REV torque adjustment
Torque meter TW-7231	8-909-708-72	For FF and REW torque check
Molycote grease EM-30L	4-918-645-01	For cassette Up compartment
EX-264 extension board	J-6226-090-A	For DIO-10 and MEM-40 boards check
EX-265 extension board	J-6226-100-A	For DIO-10 and MEM-40 boards check
Cleaning fluid	9-919-573-00	For cleaning
Cleaning piece (chamois)	2-034-697-00	For cleaning
RF LEVEL CHECKER PD-817	J-6228-170-A	For Recording/Playback Block Adjustment

SECTION 3
Periodical Inspection and Maintenance

3-1. Cleaning

After cleaning, thoroughly wipe the drum surface using a dry cloth before inserting a cassette. If you do not wipe the drum surface completely with a dry cloth, the tape may be damaged due to an effect similar to moisture condensation.

1) Normal cleaning

Clean the drum and tape passing system once a week using the following cleaning cassette.

Note : Run the cleaning cassette for no more than 30 seconds.

2) When dirt is not removed completely with the cleaning cassette (perform this cleaning once a month)

Cleaning the drum

(1) Wipe the lower section of the drum along the lead using a cleaning piece moistened with alcohol. Never touch the side surface of a drum with your bare hands.

(2) Use a dry cleaning piece and wipe the section you just wiped in the previous step.
Be sure to perform step (2) immediately after (1). After the alcohol dries up, removing the remaining dirt just by wiping with a dry cloth will be difficult.

(3) Clean the upper section of the drum using a cleaning piece moistened with alcohol.
Never touch the side surface of upper drum with your hands. Rotate the drum in the direction ofthe arrow (⇨) to wipe the side surfaces of the upper drum and head. Repeat this procedure for approximately three rotations of the upper drum.

(4) Wipe the upper section of the drum using a dry cleaning piece along the lead and rotate the upper drum approximately twice to wipe with a dry cleaning piece.
Be sure to perform step (4) immediately after (3). After the alcohol dries up, removing the remaining dirt just by wiping with a dry cloth will be difficult.

(5) Inspect the entire circumference of upper drum by sight to make sure no fingerprints and no stains remain when the alcohol dries up.

Notes :

1. Never clean the drum while it is being driven.
2. Do not wipe with the cleaning piece in a vertical motion with respect to the head chip.
Doing so will most likely damage the head chip.

Cleaning the tape running system

(1) Remove the dirt on the capstan axis, pinch roller, tension arm pin, and inclination guide pin using a cleaning piece moistened with alcohol. Wipe these parts then with a dry cleaning piece.

(2) Peel off the dirt on the rotation rollers (T1, T2, T3, S1, S2, S3, and F guides) using a stick made of pliant piece such as bamboo before too much dirt accumulates. Then, wipe these areas with a dry cleaning piece.

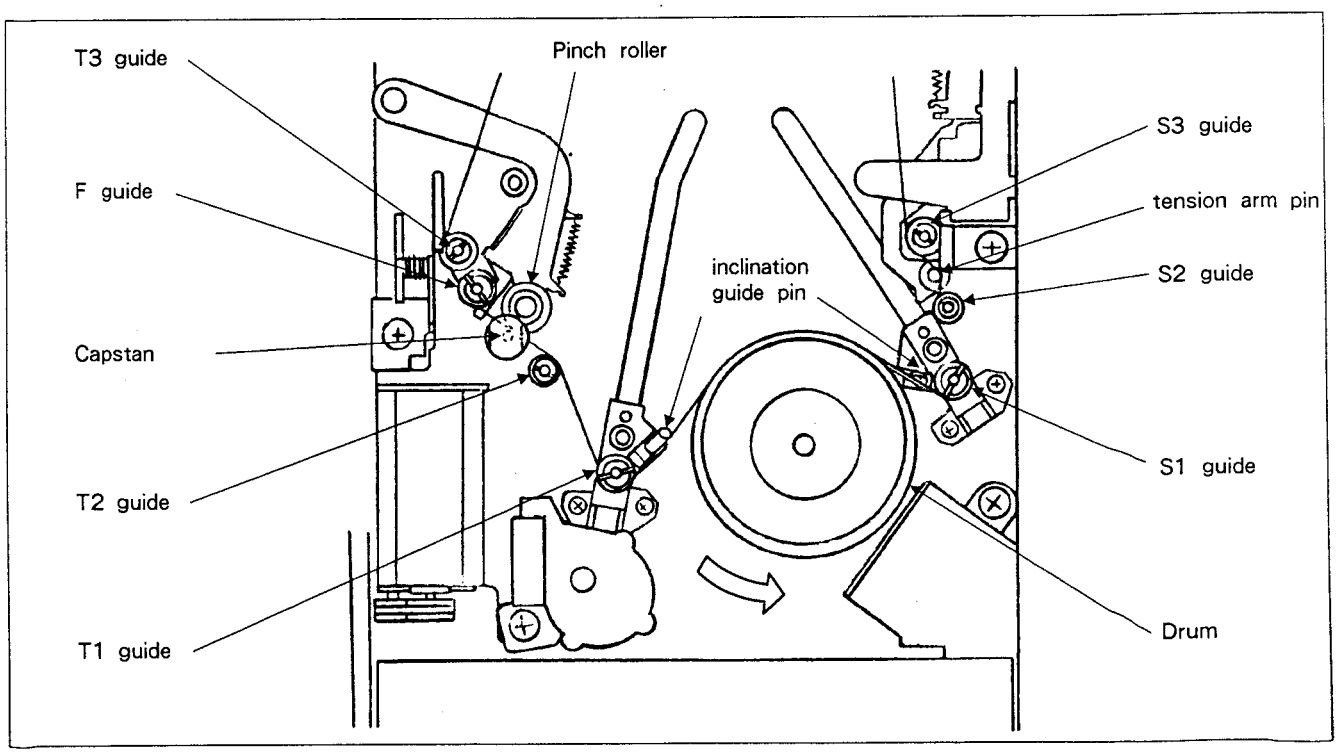

3-2. Periodical Inspection and Maintenance Procedures

To maintain proper performance, replace worn parts, clean the mechanical parts, inspect the mechanical and electrical systems, and make necessary adjustments. As a guideline, refer to the hour meter (Hour-t (HOUR-TIME)) reading in the display menu to determine the inspection and maintenance intervals. The table below shows the maintenance and inspection guidelines corresponding to the hour meter readings. A list of replacement parts is also shown. The part replacement intervals are based on the part' s service life recorded in the past.These intervals may be changed in the future.

3-3. Post-Repair Maintenance

After repairing a unit, do the following regardless of the unit's length of service.

1. Clean the drum head.
2. Clean the tape transport surfaces.

Regular inspection and maintenance schedule

Part Name (Part No.)	Head Hour Meter (h)						Remarks
	1Week	500H	1500H	3000H	4500H	6000H	
DATM assembly DATM-06R (A-7806-080-A)						☆	Replace every 6000 H.
Drum assembly DOM-14AR (8-848-548-11)	○		☆	☆	☆	(☆)	Clean once week and replace every 1500 H.
Capstan DC motor BHF-2803A (8-835-206-01)	○			☆		(☆)	Clean every week and replace every 3000 H.
Reel, U-2A DC motor (8-835-205-01)				☆		(☆)	Replace every 3000 H.
Pinch roller assembly (A-7810-488-A)	○		☆	☆	☆	(☆)	Clean once week and replace every 1500 H.
Rotary encoder (1-464-724-11)			☆	☆	☆	(☆)	Replace every 1500 H.
Cassette compartment assembly (A-7810-496-A)						☆	Replace every 6000 H.
Lithium Battly CR-2450 (1-528-229-11)			☆	☆	☆	☆	Replace when the drum assembly is replaced.

○ : Clean. ☆ : Replace. (☆) : This part is in the DATM assembly. Therefore it will be replaced at the same time when the DATM assembly is replaced.

SECTION 4
MECHANICAL ADJUSTMENT, TAPE PATH ADJUSTMENT, SERVO BLOCK ADJUSTMENT, RECORDING/PLAYBACK BLOCK ADJUSTMENT, AND ERROR RATE CHECK

This section provides information on the adjustments and checks required when you replace the following main parts of the mechanical deck.

1. Mechanical deck assembly
2. Drum assembly
3. Capstan motor
4. Reel motor
5. Pinch roller assembly
6. Rotary encoder
7. Cassette compartment assembly

The following adjustment and check items are explained here. Perform each adjustment and check using the corresponding TEST MENU item (see list below) in the SERVICE MENU.

See "2-8. Service Menu" of Section 2 for details on the TEST MENU.

Adjustment Item		TEST MENU Item (FL display)
4-2. Mechanical Device Test (operation check)		tranSP-1 tESt (trAnSP-1 tESt)
4-3. Mechanical Adjustment	4-3-1. Rotary encoder position adjustment	—
	4-3-2. End sensor operation check	torq Adj oFF (torq Adj oFF)
	4-3-3. FF/REW torque adjustment	torq Adj on (torq Adj on)
	4-3-4. FWD torque adjustment	torq Adj on (torq Adj on)
	4-3-5. REV torque adjustment	torq Adj on (torq Adj on)
	4-3-6. FWD back tension adjustment	torq Adj on (torq Adj on)
	4-3-7. EJECT torque adjustment	torq Adj on (torq Adj on)
	4-3-8. FF/REW time check	torq Adj oFF (torq Adj oFF)
4-4. Tape Path Adjustment	4-4-1. Tape running check (1)	PAtH Adj oFF (PAtH Adj oFF)
	4-4-2. Tape running check (2)	PAtH Adj oFF (PAtH Adj oFF)
	4-4-3. Tape path fine adjustment	PAtH Adj on (PAtH Adj on)
	4-4-4. RF raise up time check	PAtH Adj on (PAtH Adj on)
	4-4-5. Lack of RF waveform check in FF/REW	PAtH Adj oFF (PAtH Adj oFF)
	4-4-6. Overall tape path check	PAtH Adj oFF (PAtH Adj oFF)
4-5. Servo Block Adjustment	4-5-1. SWP position adjustment	PAtH Adj on (PAtH Adj on) and DPG Adj on (dPG Adj on)
	4-5-2. ATF playback AGC adjustment	AGc Adj on (AGc Adj on)
4-6. Recording /Playback Block Adjustment	4-6-1. Adjustment using the RF level checker PD-817	tESt SiG A-tst in (tESt SiG A-tSt in) tESt SiG d-tst in (tESt SiG d-tSt in)
	4-6-2. Adjustment using a spectrum analyzer	tESt SiG A-157-13 (tESt SiG A-157_13) tESt SiG A-13-157 (tESt SiG A-13_157) tESt SiG d-157-13 (tESt SiG d-157_13) tESt SiG d-13-157 (tESt SiG d-13_157)
4-7. EQ-H Preset and Error Rate Check	4-7-1. EQ-H preset	—
	4-7-2. Error rate check	rAtE SEL A-Ab (rAtE SEL A-Ab) rAtE SEL d-Ab (rAtE SEL d-Ab) and Err rAtE (Err rAtE)
4-8. Cassette Compartment Operation Check		—

Adjustment Procedure after Replacing the Main Parts

Use the following procedure to make adjustments after you replace the main parts.

Parts Replaced	Adjustment Procedure
Mechanical Deck Assembly (DATM-06R)	4-3-2. End sensor operation check → 4-3-3. FF/REW torque check → 4-3-4. FWD torque adjustment → 4-3-5. REV torque adjustment → 4-3-6. FWD back tension adjustment → 4-3-7. EJECT torque check → 4-4-1. Tape running check (1) → 4-4-2. Tape running check (2) → (cassette compartment assembly mounting) → 4-2. Mechanism device test → 4-3-8. FF/REW time check → 4-4-3. Tape path fine adjustment → 4-4-4. RF raise up time check → 4-4-5. Lack of RF waveform check in FF/REW → 4-4-6. Overall tape path check → 4-5-1. SWP position adjustment → 4-5-2. ATF playback AGC adjustment → 4-6. Recording/playback adjustment (recording current level adjustment) → 5-2. Signal processing adjustment (RF PLL adjustment) → 4-7-2. Error rate check
Drum Assembly (DDH-14AR)	4-3-4. FWD torque adjustment → 4-3-5. REV torque adjustment → 4-3-6. FWD back tension adjustment → 4-4-1. Tape running check (1) → 4-4-2. Tape running check (2) → (cassette compartment assembly mounting) → 4-2. Mechanism device test → 4-4-3. Tape path fine adjustment → 4-4-4. RF raise up time check → 4-4-5. Lack of RF waveform check in FF/REW → 4-4-6. Overall tape path check → 4-5-1. SWP position adjustment → 4-5-2. ATF playback AGC adjustment → 4-6. Recording/playback adjustment (recording current level adjustment) → 5-2. Signal processing adjustment (RF PLL adjustment) → 4-7-2. Error rate check
Capstan Motor (BHF2803A)	4-4-1. Tape running check (1) → 4-4-2. Tape running check (2) → (cassette compartment assembly mounting) → 4-2. Mechanism device test → 4-4-3. Tape path fine adjustment → 4-4-4. RF raise up time check → 4-4-5. Lack of RF waveform check in FF/REW → 4-4-6. Overall tape path check

Parts Replaced	Adjustment Procedure
Reel Motor (U-2A)	4-3-3. FF/REW torque check → 4-3-4. FWD torque adjustment → 4-3-5. REV torque adjustment → 4-3-6. FWD back tension adjustment → 4-3-7. EJECT torque check → 4-4-1. Tape running check (1) → 4-4-2. Tape running check (2) → (cassette compartment assembly mounting) → 4-2. Mechanism device test → 4-3-8. FF/REW time check → 4-4-3. Tape path fine adjustment → 4-4-4. RF raise up time check → 4-4-5. Lack of RF waveform check in FF/REW → 4-4-6. Overall tape path check
Pinch Roller Assembly	4-4-1. Tape running check (1) → 4-4-2. Tape running check (2) → (cassette compartment assembly mounting) → 4-2. Mechanism device test → 4-4-3. Tape path fine adjustment → 4-4-4. RF raise up time check → 4-4-5. Lack of RF waveform check in FF/REW → 4-4-6. Overall tape path check → 4-5-1. SWP position adjustment
Rotary Encoder	4-3-1. Rotary encoder position adjustment → 4-4-3. Tape path fine adjustment → 4-4-4. RF raise up time check → 4-2. Mechanism device test
Cassette Compartment Assembly	4-2. Mechanism device test → 4-8. Cassette compartment operation check → 4-3-8. FF/REW time check

The following table lists the items that must be adjusted when you replace the main parts. An item indicated with a circle requires adjustment.

Main Replacement Parts / Adjustment Item	Mechanical Deck	Drum Assembly	Capstan Motor	Reel Motor	Pinch Roller Assembly	Rotary Encoder	Cassette Compartment
4-2. Mechanical Device Test	○	○	○	○	○	○	○
4-3-1. Rotary encoder position adjustment						○	
4-3-2. End sensor operation check	○						
4-3-3. FF/REW torque adjustment	○			○			
4-3-4. FWD torque adjustment	○	○		○			
4-3-5. REV torque adjustment	○	○		○			
4-3-6. FWD back tension adjustment	○	○		○			
4-3-7. EJECT torque adjustment	○			○			
4-3-8. FF/REW time check	○			○			○
4-4-1. Tape running check (1)	○	○	○	○	○		
4-4-2. Tape running check (2)	○	○	○	○	○		
4-4-3. Tape path fine adjustment	○	○	○	○	○		
4-4-4. RF raise up time check	○	○	○	○	○		
4-4-5. Lack of RF waveform check in FF/REW	○	○	○	○	○		
4-4-6. Overall tape path check	○	○	○	○	○		
4-5-1. SWP position adjustment	○	○					
4-5-2. ATF playback AGC adjustment	○	○					
4-6. Recording/Playback Block Adjustment	○	○					
4-7-2. Error Rate Check	○	○					
4-8. Cassette Compartment Operation Check							○
5-2. Signal processing adjustment (RF PLL adjustment)	○	○					

4-1. Preparation

Equipment Required

Item	Minimum Specifications	Model
Spectrum analyzer	• frequency range : - 10 MHz and above •frequency span : zero span measurement is possible • sweep time : 100 msec and below is possible • averaging, exterior trigger is possible	advanced R3261A or equivalent
Oscilloscope	• frequency range : DC - 100 MHz and above • accuracy : 5mV • occurrence : 2 occurrences or more	TEKTRONIX 2445A or equivalent
Audio frequency oscillator	• oscillating frequencies : 20 Hz - 100 kHz • output level : - + 4 dBm and above	—

Tools Required

Item	Part No.	Remarks
Cassette compartment dummy connector	—	Make a cassette compartment dummy connector using a small harness (ccp). See " 3) Operation Without the Cassette Compartment" on page 2 - 16 for the procedure to make a dummy connector.
Cassette weight	J-6224-140-A	Used for making adjustments (checks) while the cassette compartment is removed.
Screwdriver for adjusting	J-6225-100-A	Used for the tape path fine adjustment.
RF LEVEL CHECKER PD-817	J-6228-170-A	Used for the recording / playback Block adjustment.

Test Tape and Torque Meter

Item	Part No.	Remarks
Test tape TY-7111D	8-909-820-00	Used for the playback level check.
Test tape TY-7251	8-909-813-00	Used for the tracking adjustment.
Test tape TY-30B	8-892-358-00	Used for the recording level adjustment.
Test tape TY-7212	8-960-081-01	Used for the error rate check.
Torque cassette TW-7131	8-909-708-71	Used for the FWD/REV torque adjustment.
Torque cassette TW-7231	8-909-708-72	Used for the FF/REW torque check.
Cassette tape for testing the operations	—	Any 120-minute tape sold in the market

4-2. Mechanical Device Test (operation check)

Perform the Mechanical Device Test when you replace major parts including the mechanical deck assembly, drum assembly, capstan motor, reel motor, pinch roller assembly, cassette compartment, DR-139 board and SV-123 board.

Equipment and Tools Required

Cassette tape for testing the operations

Procedure

(1) Enter (OPEN) the [trnSP] test menu in the SERVICE MENU and select the following test item. Then, press SET.
FL tube display message : trnSP-1 tESt
(rapid flashing→slow flashing)

(2) Load a cassette tape (any tape sold in the market) to test the operations. The test will automatically start checking the operations of the cassette compartment, loading motor, drum motor, reel motor, and capstan motor.(The test cassette tape will be automatically ejected.)

(3) After the operations have been tested, make sure the FL tube display indicates the following message.
FL tube display message : trnSP-1 no Error

Notes :
You must perform the above operation tests with the cassette compartment mounted in the mechanical deck (normal operating condition).
See "2-8. Service Menu" in Section 2 for the TEST MENU specification procedure.

4-3. Mechanical Adjustment

Each mechanical adjustment and check item must be performed while the cassette compartment is removed from the mechanical deck.(See "2-1. Removal of Boards and Major Mechanical Parts" on page 2-7 for the cassette compartment removal procedure.) The test cassette tape and torque meter will be used after they are mounted in the cassette weight.(See "3) Operation Without the Cassette Compartment" on page 2-18 for information on using the cassette weight.)

Equipment and Tools Required

Oscilloscope
TW-7131 Torque cassette (8-909-708-71)
Cassette tape (any 120-minute cassette tape sold in the market) for testing the operations
Cassette weight (J-6224-140-A)
Cassette compartment dummy connector *
* Make a cassette compartment dummy connector using a small harness (ccp). See "3) Operation Without the Cassette Compartment" on page 2-18 for the procedure to make a dummy connector.

Preparations

Insert the cassette compartment dummy connector in the CN106 connector on the DR-139 board.

4-3-1. Rotary encoder position adjustment

Adjust the rotary encoder position when you replace the rotary encoder.

Procedure

(1) Switch off the POWER of the unit.

(2) Remove the rotary encoder.
(Remove the rotary encoder mounting screws before disconnecting its connector.)

(3) Turn the loading motor pulley and move the pinch roller so that the roller comes in contact with the capstan axis housing as shown in the figure below.

(4) Align the arrow mark and the line in the gear of the rotary encoder (rear side) as shown in the figure below.

(5) Use two screws (+ B2x4) to mount the rotary encoder lightly on the mechanical chassis so that the gear of the rotary encoder properly engages the gear of the mechanical chassis. (Lightly tighten the screws at the center of the long holes of rotary encoder.)

(6) Switch on the POWER. Hold down cassette sensor switch and press PLAY to set the playback mode temporarily. Then, press STOP to set the mechanical deck to STOP mode. During the STOP mode, check the following items ((1),(2), and (3)). Adjust the rotary encoder mounting position as shown in the figure below to comply with the specifications. Make adjustments while POWER is switched off and check the position when POWER is on.

Specifications :

① The tension regulator release pin shall be set at the OFF position of the tension regulator.

② The gap between the capstan axis and the pinch roller shall be 1.5mm to 2.5mm.

③ The F guide must be in contact with the groove of the square hole of the mechanical chassis.

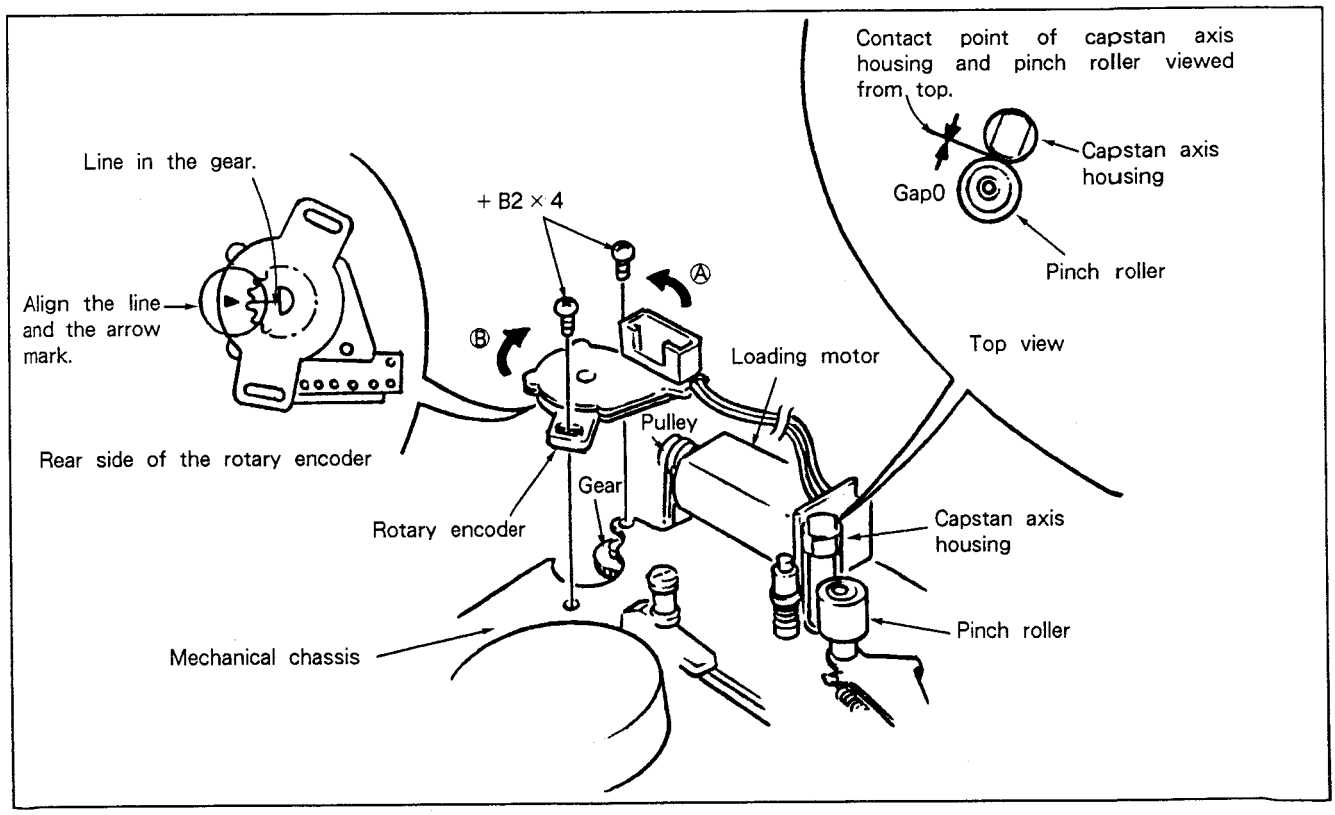

Adjustment location :

Move the mounting position of the rotary encoder.

Adjustment direction	Distance to pinch roller
Direction A	Closer
Direction B	Wider

(7) Set the mechanical deck (guide) to FWD mode. Make sure the rotary encoder position complies with the following specifications in this condition.

Specifications :

① Tension regulator release pin shall be at the ON position of the tension regulator.

② The pinch roller shall be in contact with the capstan axis.

(8) Set the mechanical deck (guide) to STOP mode again. In this condition, make sure the rotary encoder position complies with the specifications indicated in step (6).

(9) This time, firmly tighten two screws (+ B2x4) which mount the rotary encoder on the mechanical chassis.

If the rotary encoder position does not comply with the specifications of steps (6) and (7), retry the procedure from step (1).

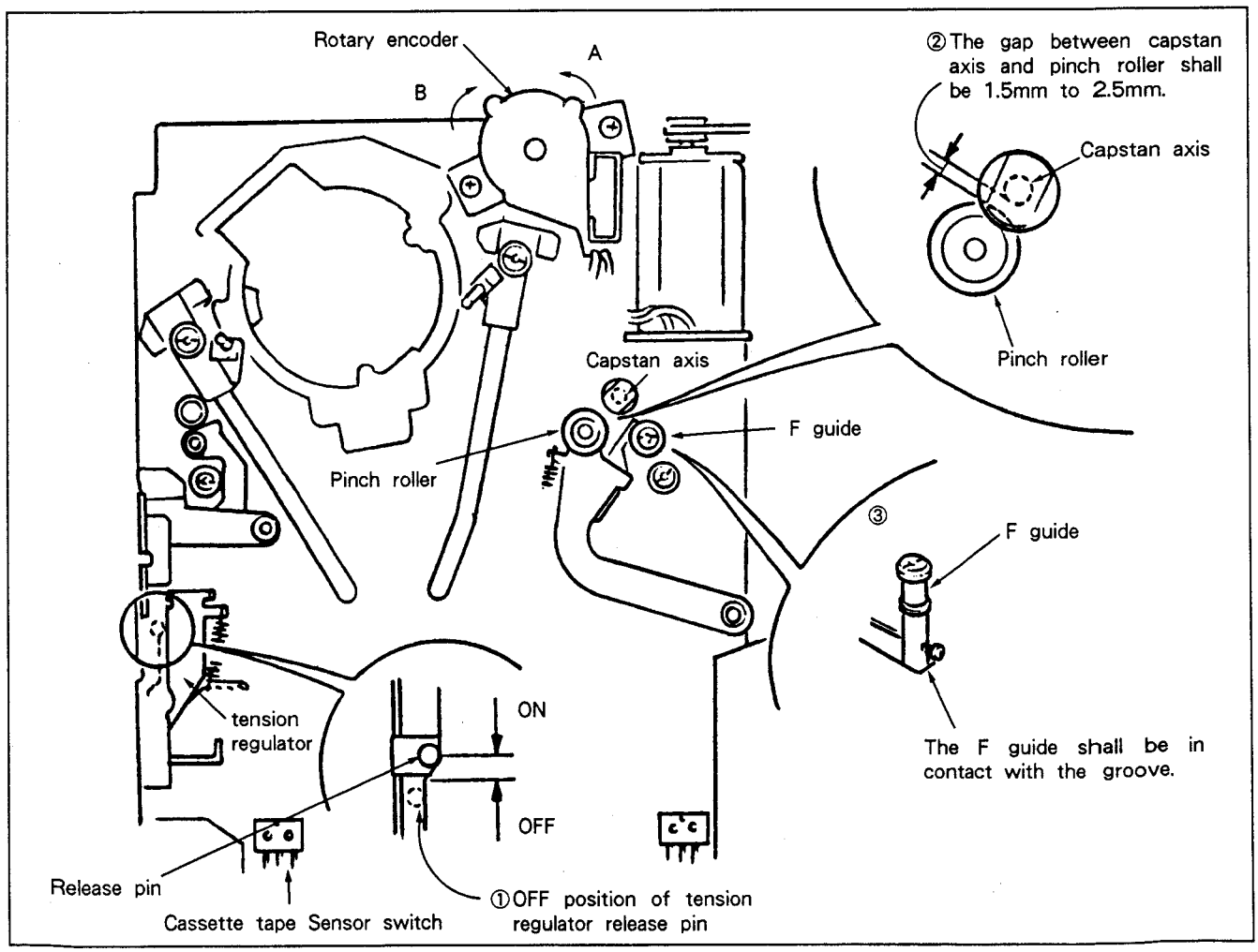

4-3-2. End sensor (S side, T side) operation check

Check the operation of the end sensor when you replace the mechanical deck.

Equipment and Tools Required

Oscilloscope

CH1 : DC 500mV/DIV

CH2 : DC 500mV/DIV

500usec/DIV

Note : When the DC measurement causes a scale overflow, measure in AC mode.

TY-30B Test tape (8-892-358-00)

Cassette compartment dummy connector

Cassette weight (J-6224-140-A)

Connections

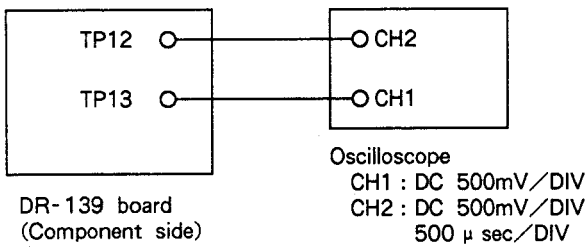

Switch settings

DR-139 board

SW201 (C,5) : H (Both switches S and T) See figure below.

SW202 (C,5) : H (Both switches S and T) See figure below.

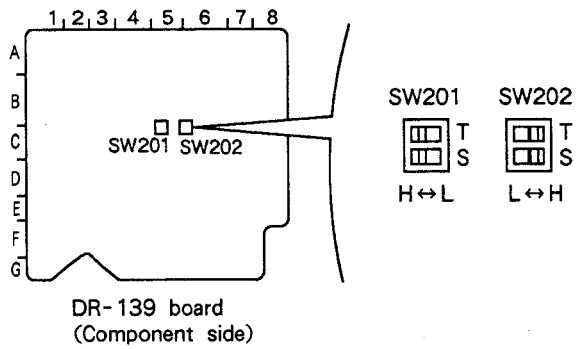

Measurement Location

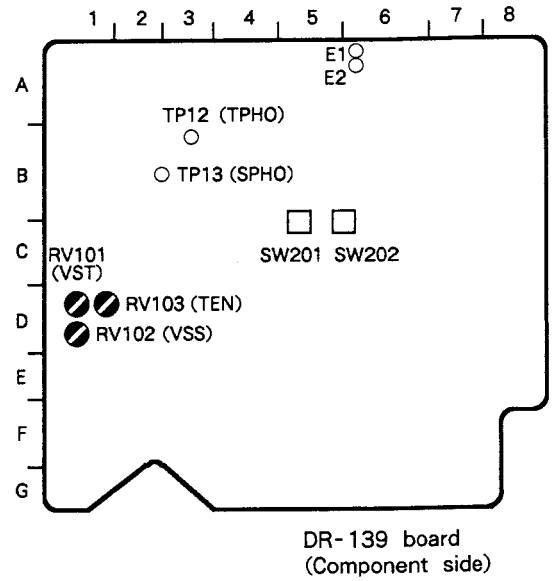

Procedure

(1) Enter (OPEN) the TEST MENU [trnSP] in the SERVICE MENU and make the following selection.

FL tube display : torq Adj oFF

Note : When ON is set from the POWER switch OFF status, this mode is automatically selected.

(2) Connect the oscilloscope to the following connectors of the DP-139 board.

CH1 : TP13 (SPHO) • E1 (GND), DR-139 board

CH2 : TP12 (TPHO) • E2 (GND), DR-139 board

(3) Attach the TY-30B test tape to the cassette weight and mount it on the mechanical deck.

Note : Since the loading operation will start almost immediately after you mount the cassette weight on the mechanical deck, be sure to mount it quickly.

(4) Press REW and rewind the tape to its beginning to make sure the output level of the TP12 (TPHO) at the reader tape section complies with the following specifications.(Check operation of the T side end sensor.)

(5) Press FF and feed the tape to the its end to make sure the output level of the TP13 (SPHO) at the reader section complies with the following specifications.(Check operation of the S side end sensor.)

Note : When you check the operation of the T side end sensor, the tape will be rewound automatically a little at the tape beginning and the FF/REW operations will be repeated.

Specifications : S side output level (A) 800mVp-p
T side output level (B) 800mVp-p

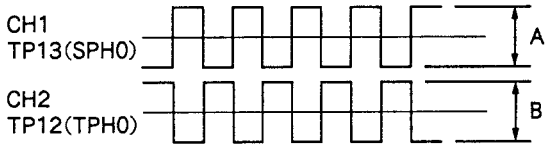

(6) Perform FF and REW operations and make sure the beginning and end of a tape stop at the following positions.

Tape end position check (FF operation)

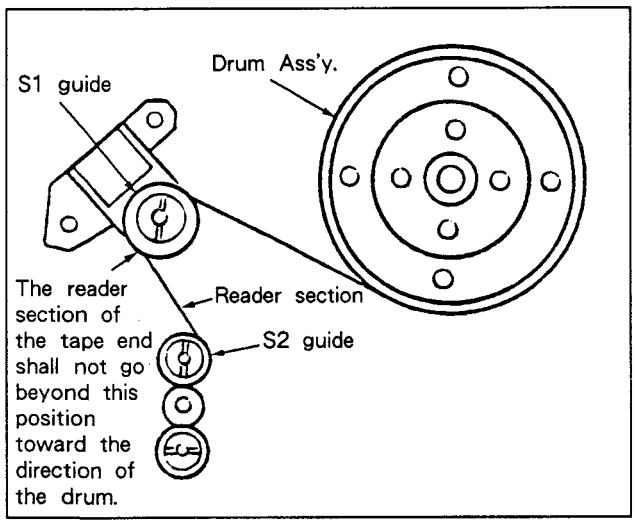

Tape start position check (REW operation)

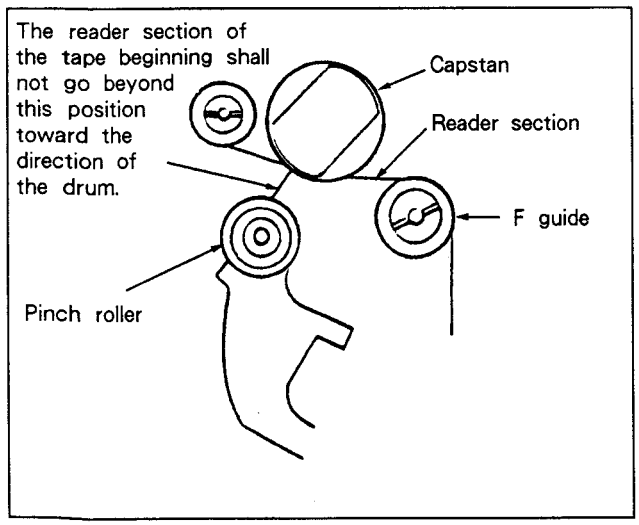

(7) Press EJECT. After a tape is wound, remove the cassette tape from the mechanical deck.

4-3-3. FF/REW torque check

Check the FF/REW torque operations when you replace the reel motor, and DR-139 board. Be sure to perform the following adjustments after you check the FF/REW torque operations.

4-3-4. FWD torque adjustment
4-3-5. REV torque adjustment
4-3-6. FWD back tension adjustment

Equipment and Tools Required

TW-7231 Torque cassette (8-909-708-72)
Cassette weight (J-6224-140-A)
Cassette compartment dummy connector

Adjustment Locations

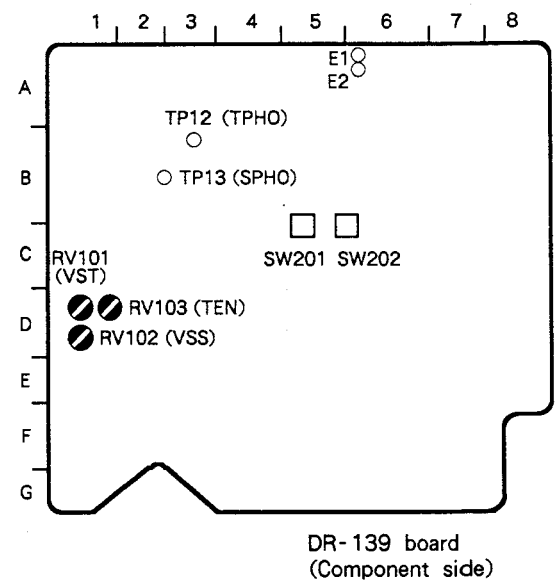

DR-139 board
(Component side)

Procedure

(1) Enter (OPEN) the TEST MENU [trnSP] in the SERVICE MENU and make the following selection.
FL tube display message : torq Adj on
(At this time, the ALARM indicator on the front panel will flash.)

(2) Attach the TW-7231 torque cassette to the cassette weight and mount it on the mechanical deck.

Note : Since the loading operation will start almost immediately after you mount the cassette weight on the mechanical deck, mount it quickly.

(3) Turn ⊘RV101 (VST) and ⊘RV102 (VSS) fully clockwise.

(4) Press FF to select the FF mode.

(5) When the FF mode stabilizes, make sure the maximum torque value of the TW-7231 torque cassette (take-up reel side) complies with the following specifications.

Specifications :

Maximum FF torque 25 to 40g • cm

(6) Press STOP.

(7) Press REW to select the REW mode.

(8) When the REW mode stabilizes, make sure the maximum torque value of the TW-7231 torque cassette (supply reel side) complies with the following specifications.

Specifications :

Maximum REW torque 25 to 40g • cm

(9) Set ⊘RV101 (VST) and ⊘RV102 (VSS) of the DR-139 board at the detent position (the midpoint of a full rotation).

4-3-4. FWD torque adjustment (DR-139 board adjustment)

Perform this adjustment when you replace the mechanical deck assembly, drum assembly, reel motor, and DR-139 board.

Equipment and Tools Required

TW-7131 Torque cassette (8-909-708-71)

Cassette weight (J-6224-140-A)

Cassette compartment dummy connector

Adjustment Locations

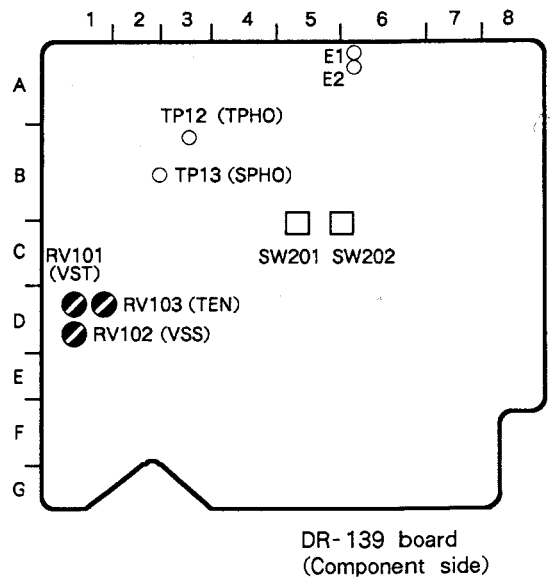

DR-139 board
(Component side)

Procedure

(1) Enter (OPEN) the TEST MENU [trnSP] in the SERVICE MENU and make the following selection.

FL tube display message : torq Adj on

(At this time, the ALARM indicator on the front panel will flash.)

(2) Attach the TW-7131 torque cassette to the cassette weight and mount it on the mechanical deck.

Note : Since the loading operation will start almost immediately after you mount the cassette weight on the mechanical deck, mount it quickly.

(3) Press PLAY to start the playback mode.

(4) Adjust ◐RV101 (VST) of the DR-139 board so that the torque value of the TW-7131 torque cassette (take-up reel side) complies with the following specifications. Make the adjustment in accordance with the structure of the S2 guide.

Specifications :

S2 guide structure	FWD torque (g • cm)
Fixed guide	12 to 14
Roller guide	8 to 10

Note : When the meter indication fluctuates, make adjustments so that the center of this fluctuation complies with the specifications.

Adjustment Location :

◐RV101 (VST), DR-139 board

(5) Press EJECT. After the tape is wound, remove the TW-7131 torque cassette from the mechanical deck.

4-3-5. REV torque adjustment

Perform this adjustment when you replace the mechanical deck assembly, drum assembly, and reel motor, and DR-139 board.

Equipment and Tools Required

TW-7131 Torque cassette (8-909-708-71)
Cassette weight (J-6224-140-A)
Cassette compartment dummy connector

Adjustment Location

See "Adjustment Locations" in 4-3-4. FWD torque adjustment.

Procedure

(1) Enter (OPEN) the TEST MENU [trnSP] in the SERVICE MENU and make the following selection.

FL tube display message : torq Adj on

(At this time, the ALARM indicator on the front panel will flash.)

(2) Attach the TW-7131 torque cassette to the cassette weight and mount it on the mechanical deck.

Note : Since the loading operation will start almost immediately after you mount the cassette weight on the mechanical deck, mount it quickly.

(3) Press CUE to start the REVx (-1) mode of the CUE mode (turn the SEARCH dial counter clockwise until "-1" appears on the FL tube display).

(4) Adjust ◐RV102 of the DR-139 board so that the torque value of the TW-7131 torque cassette (supply reel side) complies with the following specifications.

Specifications : REV torque $14 \pm \frac{1}{0}$ g • cm

Adjustment Location : ◐RV102, DR-138 board

(5) Press EJECT. After the tape is wound, remove the TW-7131 torque cassette from the mechanical deck.

4-3-6. FWD back tension adjustment

Perform this adjustment when you replace the mechanical deck assembly, drum assembly, reel motor, and DR-139 board.

Equipment and Tools Required
TW-7131 Torque cassette (8-909-708-71)
Cassette weight (J-6224-140-A)
Cassette compartment dummy connector

Adjustment Location
See "Adjustment Locations" in section 4-3-4. FWD torque adjustment.

Procedure
(1) Enter (OPEN) the TEST MENU [trnSP] in the SERVICE MENU and make the following selection.
FL tube display message : torq Adj on
(At this time, the ALARM indicator on the front panel will flash.)
(2) Attach the TW-7131 torque cassette to the cassette weight and mount it on the mechanical deck.
Note : Since the loading operation will start almost immediately after you mount the cassette weight on the mechanical deck, mount it quickly.
(3) Press PLAY to start the playback mode.
(4) Adjust ⊘RV103 (TEN) of the DR-139 board so that the torque value of the TW-7131 torque cassette (supply reel side) complies with the following specifications. Make the adjustment in accordance with the structure of the S2 guide.

Specifications :

S2 guide structure	FWD back tension (g • cm)
Fixed guide	4.5 ±0.5
Roller guide	5.5 ±0.5

Adjustment Location : ⊘RV103, DR-139 board
(5) Press EJECT. After the tape is wound, remove the TW-7131 torque cassette from the mechanical deck.

4-3-7. EJECT torque check

Check the EJECT torque when you replace the reel motor, and DR-139 board.

Equipment and Tools Required
TW-7131 Torque cassette (8-909-708-71)
Cassette weight (J-6224-140-A)
Cassette compartment dummy connector

Procedure
(1) Enter (OPEN) the TEST MENU [trnSP] in the SERVICE MENU and make the following selection.
FL tube display message : torq Adj on
(At this time, the ALARM indicator on the front panel will flash.)
(2) Attach the TW-7131 torque cassette to the cassette weight and mount it on the mechanical deck.
Note : Since the loading operation will start almost immediately after you mount the cassette weight on the mechanical deck, mount it quickly.
(3) Press PLAY to start the playback mode.
(4) Press EJECT and make sure the torque value of the TW-7131 torque cassette (both supply and take-up reel sides) complies with the following specifications during the unthreading (unloading) operation.
Specifications : EJECT torque 5 to 10g • cm
(5) Set the torq Adj test menu to OFF (the following message should appear).
FL tube display message : torq Adj oFF

4-3-8. FF/REW time check

Check the FF/REW time when you replace the mechanical deck assembly, drum assembly, and reel motor.

Equipment and Tools Required

Cassette tape (any 120-minute tape sold in the market) for checking the operation
Cassette weight (J-6224-140-A)
Cassette compartment dummy connector

Procedure

(1) Enter (OPEN) the TEST MENU [trnSP] in the SERVICE MENU and make the following selection.
FL tube display message : torq Adj oFF
(2) Attach the 120-minute cassette tape for the operation check to the cassette weight and mount the weight on the mechanical deck.
Note : Since the loading operation will start almost immediately after you mount the cassette weight on the mechanical deck, mount it quickly.
(3) Press FF to start the FF operation from the beginning to the end of the tape. Make sure the tape winding time complies with the following specifications.
Specifications :
Tape winding time Maximum 60 seconds
(4) Press REW to start the REW operation from the end to the beginning of the tape. Make sure the tape winding time complies with the following specifications.
Specifications : REW mode time Maximum 60 seconds
(5) Press EJECT. After the tape is wound, remove the cassette tape from the mechanical deck.

4-4. Tape Path Adjustment

4-4-1. Tape running check (1)

Check the tape running system when you replace the mechanical deck assembly, drum assembly, capstan motor, reel motor, pinch roller assembly, and DR-139 board. The following section explains how to check tape running conditions in the PLAY mode or CUE mode.(The state in which the capstan axis and pinch roller are in contact with each other.) Perform the following procedure while the cassette compartment is removed from the mechanical deck.

Equipment and Tools Required

Cassette tape (any 120-minute tape sold in the market) for checking the operation
Cassette weight (J-6224-140-A)
Cassette compartment dummy connector

Preparation

Insert the cassette compartment dummy connector in the CN106 connector on the DR-139 board.

Procedure

(1) Enter (OPEN) the TEST MENU [trnSP] and make the following selection.
FL tube display message : Path Adj oFF
(2) Attach the 120-minute cassette tape for the operation check to the cassette weight and mount them on the mechanical deck.
(3) Press PLAY to start the playback mode.
(4) Follow instructions ① and ② below to check the tape running conditions. See the Guide Position Diagram for each guide position.
① Confirm that the tape does not come out from the flanges of the S1, T1, S2, T2, S3, T3 and F guides.
Note : Tape curling is accepted as long as it is within the specified range (see figure below). If the S1 and T1 guides are displaced to a large height, tape curling may occur at the S2 and T2 guides. In that case, first follow the procedure

in "4-4-3. Tape path fine adjustment" and adjust the S1 and T1 guides, and then check item ① above.

② Confirm that the tape is not slack end, wrinkled, or twisted before and after the pinch roller (capstan axis).

Note : When you switch between the FWD and REV modes, a tape may sometimes be stretched or twisted. If the tape recovers from such a slack end or twist within 2 seconds, the condition is acceptable. Wrinkling of tape, however, is not acceptable.

(5) Check items 1 and 2 of step (4) above for each operation (FWD 1/5, 1/2, 1, 3, 8, 16 ; REV -1 /5, -1/2, -1, -3, -8, -16) of the CUE mode.

Note : You can display the speed of each mode on the FL tube display. See "2-8. Service Menu" in Section 2 for information on the displaying method.

Example : FWD 1/5→0_2 (display)

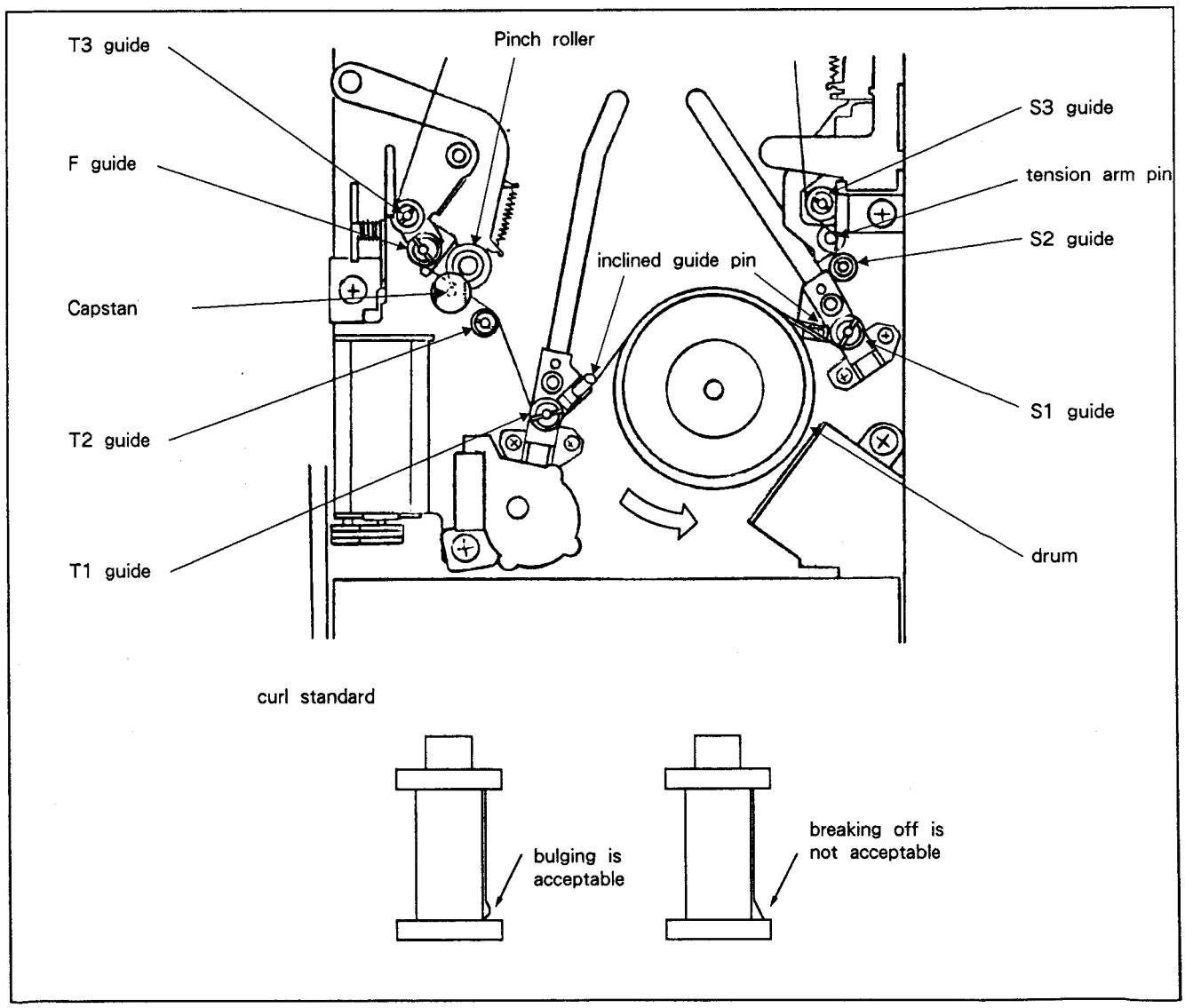

4-4-2. Tape running check (2)

Check the tape running system when you replace the mechanical deck assembly, drum assembly, capstan motor, reel motor, and pinch roller assembly, and DR-139 board. The following section explains how to check the tape running conditions in the FF mode or REW mode.(The state in which the capstan axis and pinch roller are separated from each other.) Perform the following procedure while the cassette compartment is removed from the mechanical deck.

Equipment and Tools Required

Cassette tape (any 120-minute tape sold in the market) for checking the operation
Cassette weight (J-6224-140-A)
Cassette compartment dummy connector

Preparation

Insert the cassette compartment dummy connector in the CN106 connector on the DR-139 board.

Procedure

(1) Enter (OPEN) the TEST MENU [trnSP] and make the following selection.
FL tube display message : PAtH Adj oFF
(2) Attach the 120-minute operation check cassette tape to the cassette weight and mount them on the mechanical deck.
(3) Press FF to start the FF mode.
(4) Follow the instructions below to check the tape running condition near the beginning of a tape. Confirm that the tape is not come out from the flanges of the S1, T1, S2, T2, S3, T3 and F guides.
Note : Tape curling is accepted as long as it is within the specified range (see page 4-15 for curl specifications).
(5) Press REW to start the REW mode.
(6) Follow the instructions indicated in step (4) to check the tape running condition near the end of a tape.

4-4-3. Tape path fine adjustment

Make fine adjustments of the tape path when you replace the mechanical deck assembly, drum assembly, capstan motor, reel motor, and pinch roller assembly, and DR-139 board. Perform the following adjustment and the subsequent items while the cassette compartment is mounted in the mechanical deck. Be sure to execute the procedure in "4-2. Mechanism Device Test" to make sure there are no errors when the cassette compartment is mounted in the mechanical deck.

Equipment and Tools Required

Oscilloscope
CH1 : AC 200mV/DIV
TY-7251 Test tape (8-909-813-00)
Adjustment driver (J-6225-100-A)

Connections

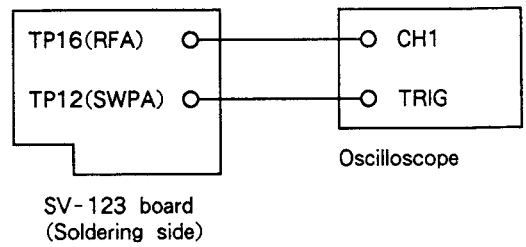

Adjustment Location

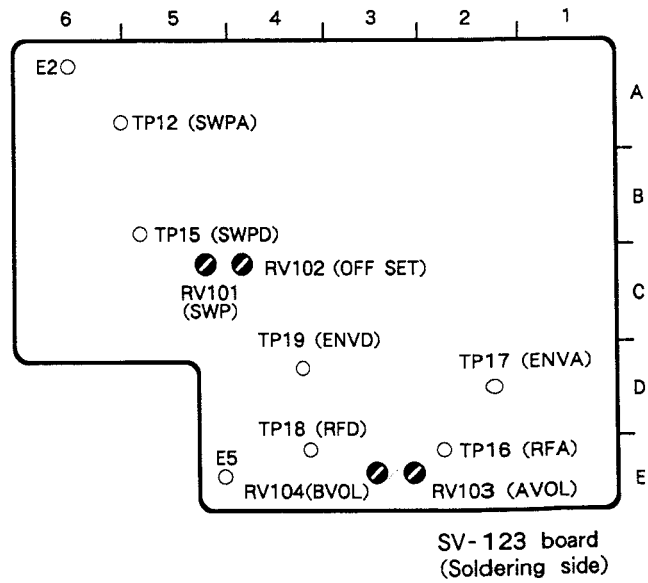

Procedure

(1) Enter (OPEN) the TEST MENU [trnSP] and make the following selection.
FL tube display message : PatH Adj on

(2) Connect the oscilloscope to the SV-123 board as indicated below.
CH1 : TP16 (RF-A) • E5 (GND), SV-123 board
TRIG : TP12 (SWP-A) • E2 (GND), SV-123 board

(3) Load the TY-7251 test tape.

(4) Press PLAY to playback the TY-7251 test tape.

(5) Adjust ◐RV102 on the SV-123 board to obtain maximum output of the RF signal waveform on the oscilloscope.

(6) Make fine adjustments of the S1 and T1 guides so that the RF signal waveform of the oscilloscope CH1 complies with the following specifications.
Specifications : $\frac{B}{A} \times 100(\%) \geq 90\%$

TP16 RF signal waveform A ch

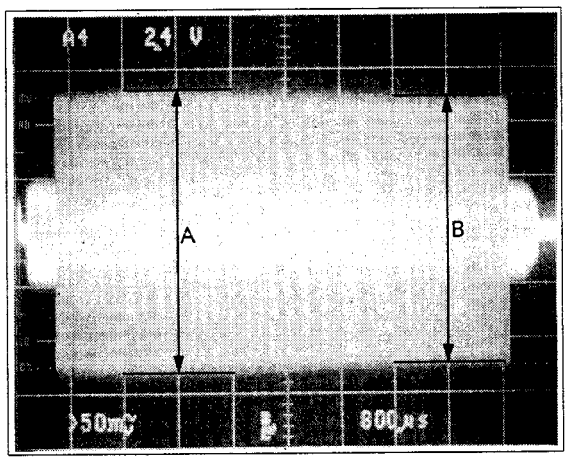

max A
min B

Note : If you adjust the S1 and/or T1 guides, press PLAY again after pressing EJECT and make sure the RF signal waveform complies with the above specifications. (This is because, sometimes, a guide may become skewed when you apply force to the adjusting screwdriver during adjustment.)

(7) Turn ◐RV102 (OFFSET VR) on the SV-123 board to make sure the above RF signal waveform is changed in a parallel direction.

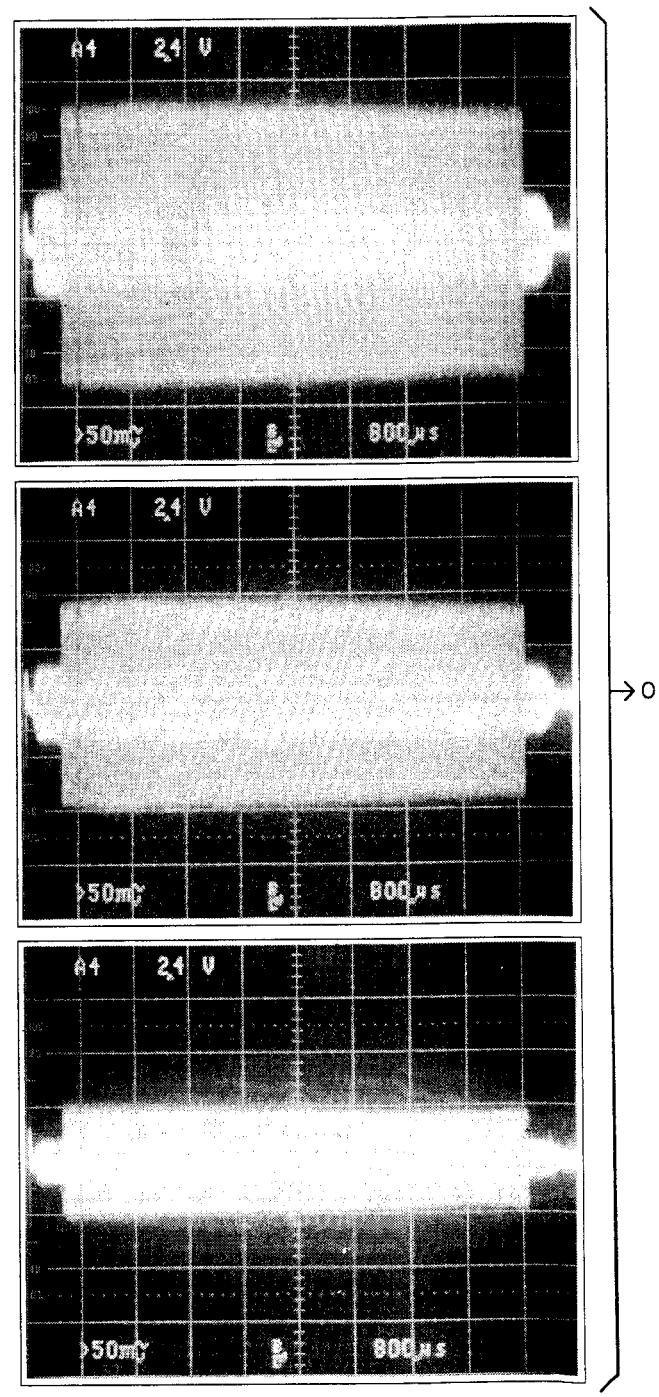

If the waveform is not good

TP16 RF signal waveform A ch

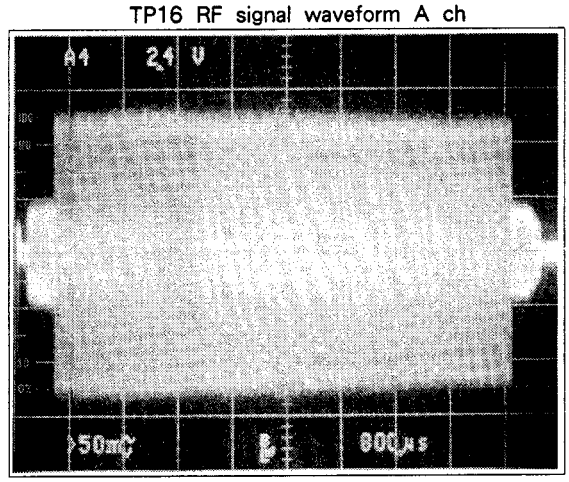

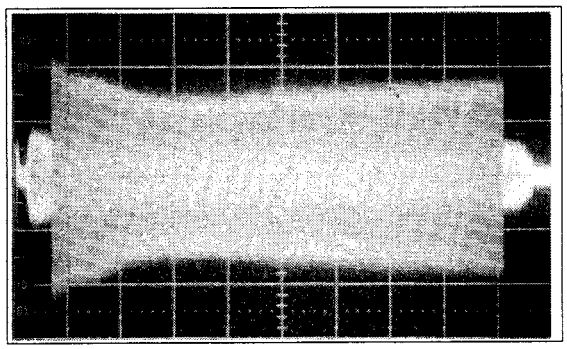

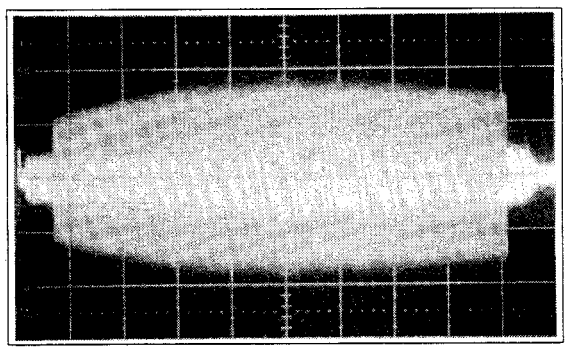

If the input waveform is not good, readjust the S1 guide.

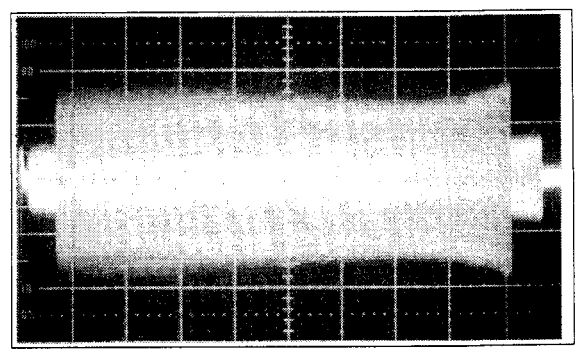

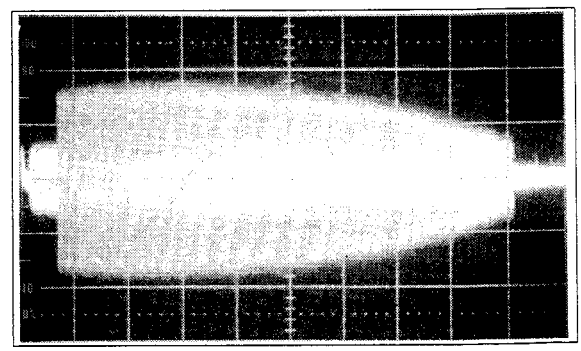

If the output waveform is no good, readjust the T1 guide.

(8) Turn ◐RV102 (OFFSET VR) on the DR-139 board so that the RF signal waveform level will be at 80% (maximum). At that time, confirm that the RF signal waveform complies with the following specifications. If the waveform is not good, repeat steps (6) and (7).

Specifications : $\frac{B}{A} \times 100(\%) \geqq 80\%$

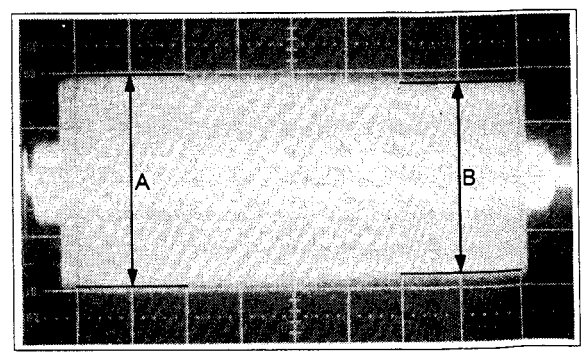

TP16 RF signal waveform A ch

4-4-4. RF raise up time check

Equipment and Tools Required
Oscilloscope
CH1 : AC 200mV/DIV
TY-7251 Test tape (8-909-813-00)

Connections
Same as "4-4-3. Tape path fine adjustment."

Adjustment Location
See adjustment location in "4-4-3. Tape path fine adjustment."

Procedure
(1) Enter (OPEN) the TEST MENU [trnSP] and make the following selection.
FL tube display message : PAtH Adj on
(2) Connect the oscilloscope to the SV-123 board as indicated below.
Oscilloscope
CH1 : TP16 (RF-A) • E5 (GND), SV-123 board
TRIG : TP12 (SWP-A) • E2 (GND), SV-123 board
(3) Load the TY-7251 test tape in the mechanical deck.
(4) Press PLAY to playback the TY-7251 test tape.
(5) Press STANDBY to set the STANDBY mode to OFF. Make sure the drum rotation has stopped. Then, press PLAY to check if the oscilloscope waveform will stabilize within 2 seconds.

TP16 RF signal waveform A ch

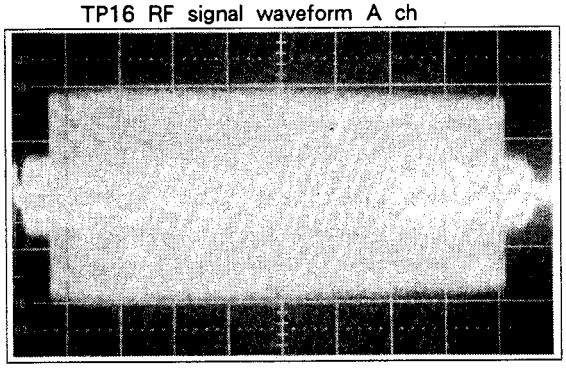

OK

TP16 RF signal waveform A ch

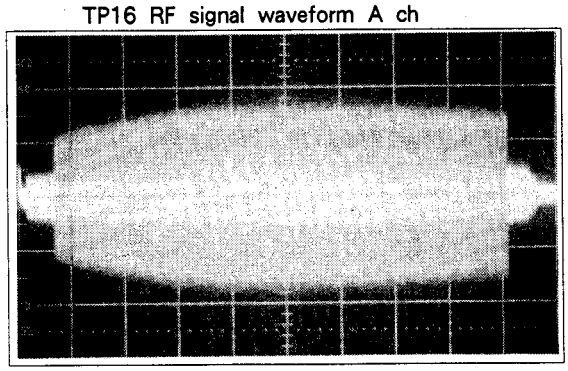

NG

4-4-5. Lack of RF waveform check in FF/REW

Equipment and Tools Required
Oscilloscope
CH1 : AC 200mV/DIV
Cassette tape (any 120-minute tape sold in the market) for checking the operation

Connections
Same as "4-4-3. Tape path fine adjustment."

Adjustment Location
See adjustment location in "4-4-3. Tape path fine adjustment."

Procedure
(1) Set the TEST MENU [trnSP] to the following selection.
FL tube display message : PAtH Adj oFF
(2) Connect the oscilloscope to the SV-123 board as indicated below.
Oscilloscope
CH1 : TP16 (RF-A) • E5 (GND), SV-123 board
TRIG : TP12 (SWP-A) • E2 (GND), SV-123 board
(3) Load the 120-minute cassette tape for checking the operation in the mechanical deck.
(4) Perform FF and REW operations at the beginning and end of the tape and confirm that the RF signal waveform of the oscilloscope does not lack.

TP16 RF signal waveform A ch

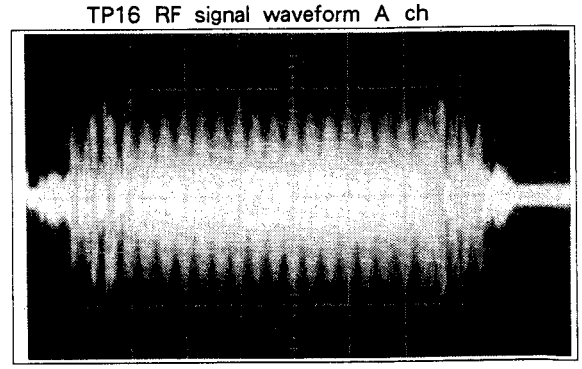

OK

TP16 RF signal waveform A ch

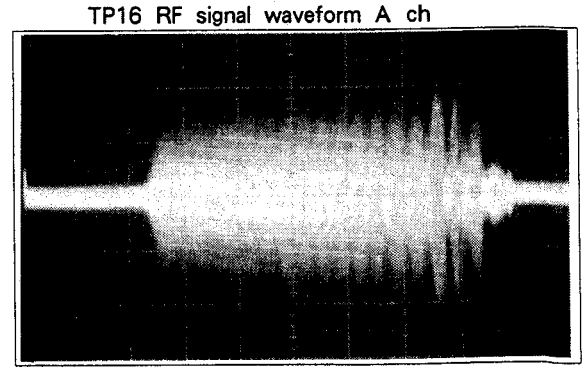

NG

4-4-6. Overall tape path check

Equipment and Tools Required

Oscilloscope

Cassette tape (any 120-minute tape sold in the market) for checking the operation

Signal source equipment (low frequency oscillator) A signal can be a sine wave or a music signal with a signal input level of about standard level.

Connections

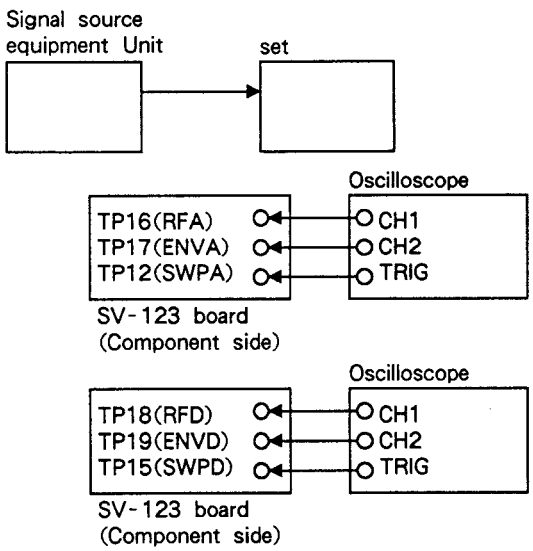

Measurement Location

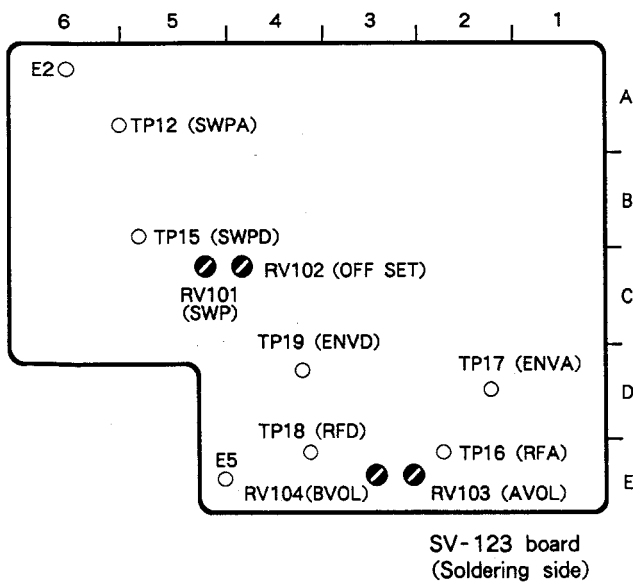

Procedure

(1) Enter (OPEN) the TEST MENU [trnSP] and make the following selection.
FL tube display message : PatH Adj oFF

(2) Transmit an input signal level of about 0dB from the signal source equipment.

(3) Load the 120-minute cassette tape for checking the operation in the mechanical deck.

(4) Set the recording mode to ASSEMBLE and record the signal of step (2) above (for about 2 minutes).

(5) Playback the recorded portion and check the following items.

Leading head RF check

(6) Connect the oscilloscope to the SV-123 board as indicated below.
Oscilloscope
CH1 : TP16 (RF-A) · E5 (GND), SV-123 board
CH2 : TP17 (ENV-A) · E5 (GND), SV-123 board
TRIG : TP12 (SWP-A) · E2 (GND), SV-123 board

(7) Make sure the PCM area of the oscilloscope CH2 waveform (TP17, envelope) complies with the following specifications.

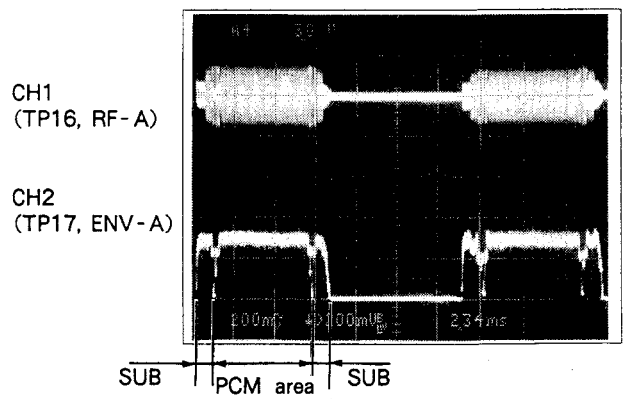

Observe the PCM area.

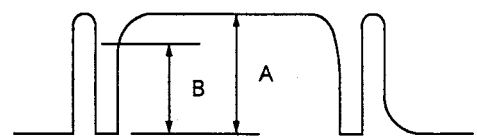

Specifications : $\frac{B}{A} \times 100\% \geqq 80\%$

(8) After pressing EJECT, load a cassette tape to check the operation again. Press PLAY and check if the oscilloscope CH2 waveform (TP17, envelope) attains the specification range indicated in step (7) within 3 seconds (the waveform stabilizes within 3 seconds).

(9) In the same way as step (8), change the mode to PLAY from REV (x1) and check if the oscilloscope CH2 waveform (TP16, envelope) attains the specification range indicated in step (7) within 2 seconds (the waveform stabilizes within 2 seconds).

(10) Press STOP.

Trailing head RF check

(11) Connect the oscilloscope to the SV-123 board as indicated below.

Oscilloscope

CH1 : TP18 (RF-D) • E5 (GND), SV-123 board

CH2 : TP19 (ENV-D) • E5 (GND), SV-123 board

TRIG : TP15 (SWP-D) • E2 (GND), SV-123 board

(12) Press PLAY to playback the portion recorded in step (4) and check the following item.

(13) Make sure the PCM area of oscilloscope CH2 waveform (TP19, envelope) complies with the following specifications.

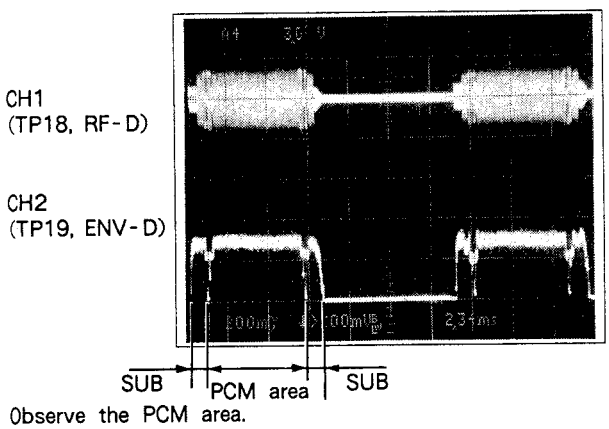

Observe the PCM area.

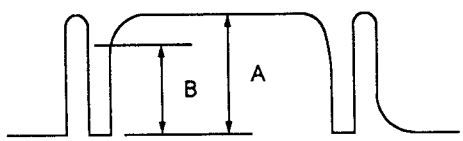

Specifications : $\frac{B}{A} \times 100\% \geqq 80\%$

(14) After pressing EJECT, load a cassette tape to check the operation again. Press PLAY and check if the oscilloscope CH2 waveform (TP19, envelope) attains the specification range indicated in step (13) within 3 seconds (the waveform stabilizes within 3 seconds).

(15) In the same way as step (14), change the mode to PLAY from REV (x1) and check if the oscilloscope CH2 waveform (TP19, envelope) attains the specification range indicated in step (13) within 2 seconds (the waveform becomes stable within 2 seconds).

(16) Press EJECT and remove the cassette tape for checking the operation.

4-5. Servo Block Adjustment

4-5-1. SWP position adjustment

Adjust the SWP position when you replace the mechanical deck assembly, drum assembly, and SV-123 board. Perform the following adjustment while the cassette compartment is mounted in the mechanical deck.

Equipment and Tools Required

Oscilloscope

TY-7251 Test tape (8-909-813-00)

Connections

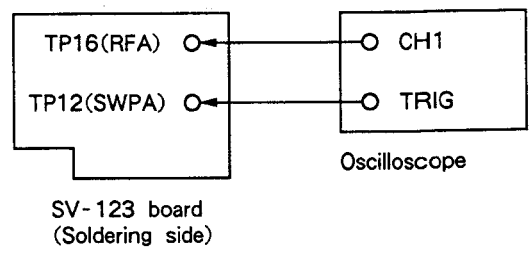

Adjustment Location

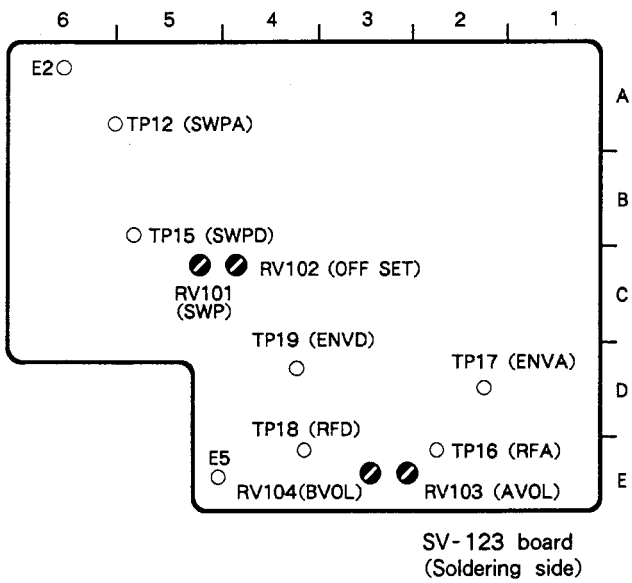

Procedure

(1) Enter (OPEN) the TEST MENU [trnSP] and make the following selections.
FL tube display message : PatH Adj on and
FL tube display message : dPG Adj on

(2) Connect the oscilloscope to the SV-123 board as indicated below.
CH1 : TP16 (RF-A) • E5 (GND), SV-123 board
CH2 : TP18 (RF-D) • E5 (GND), SV-123 board
CH3 : TP12 (SWP-A) • E1 (GND), SV-123 board

(3) Load the TY-7251 test tape.

(4) Press PLAY to playback the TY-7251 test tape.

(5) Adjust ⊘RV102 on the SV-123 board to obtain maximum output of the RF waveform of oscilloscope CH1.

(6) Adjust ⊘RV101 on the SV-123 board so that the RF output waveform of oscilloscope CH1 complies with the following specifications.
Specifications :
T of the RF A output waveform = 650usec. ± 15usec.
Adjustment Location : ⊘RV101, SV-123 board

(7) Press EJECT to remove the TY-7251 test tape from the mechanical deck.

(8) Select the following TEST MENU modes.
FL tube display message : dPG Adj oFF and
FL tube display message : PatH Adj oFF

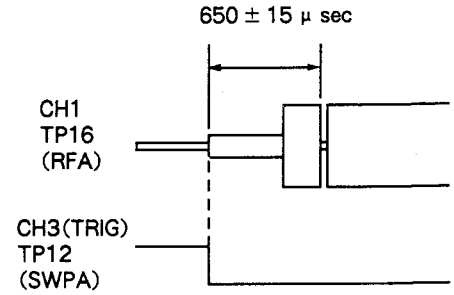

4-5-2. ATF playback AGC adjustment

Adjust the ATF playback AGC when you replace the mechanical deck assembly and drum assembly. Perform the following adjustment while the cassette compartment is mounted in the mechanical deck.

Equipment and Tools Required

Oscilloscope

TY-7111D Test tape (8-909-820-00)

Connections

Same as "4-5-1. SWP position adjustment"

Procedure

(1) Enter (OPEN) the TEST MENU [trnSP] and make the following selections.
FL tube display message : AGC Adj on
(flashing)

(2) Load the TY-7111D test tape.

(3) Press PLAY to playback the TY-7111D test tape. At that time, make sure the RF waveform is output properly. The output level of 1.57MHz should be 250mV or more.

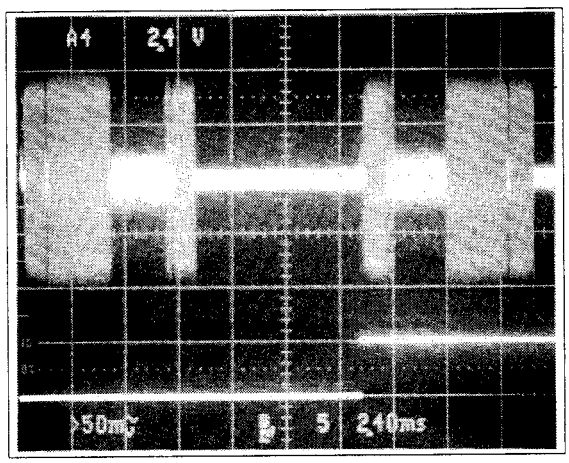

(4) Press SET. When you press SET, the message "ON" in the Work Area of FL tube display will be lit instead of flashing.This status indicates that the ATF playback AGC gain is being automatically adjusted (set). The adjusted gain will be displayed on the FL tube display.

(5) Select the following TEST MENU mode and then press SET.
FL tube display message : AGc Adj oFF

(6) Press EJECT to remove the TY-7111D test tape from the mechanical deck.

4-6. Recording/Playback Block Adjustment (Recording current level adjustment)

Adjust the recording current level when you replace the mechanical deck assembly, drum assembly, and RF-31 board assembly. Perform the adjustment while the cassette compartment is mounted in the mechanical deck.

4-6-1. Adjustment using the RF LEVEL CHECKER PD-817

This section provides information on the adjustment method using the RF LEVEL CHECKER PD-817, which is a dedicated adjustment tool. Follow the sequence below to make adjustments :

Equipment and Tools Required

Oscilloscope

RF LEVEL CHECKER PD-817: (part no.:J-6228-170-A)

TY-7111D Test tape (part no. : 8-909-820-00)

TY-30B Test tape (part no. : 8-892-358-00)

Adjustment procedure

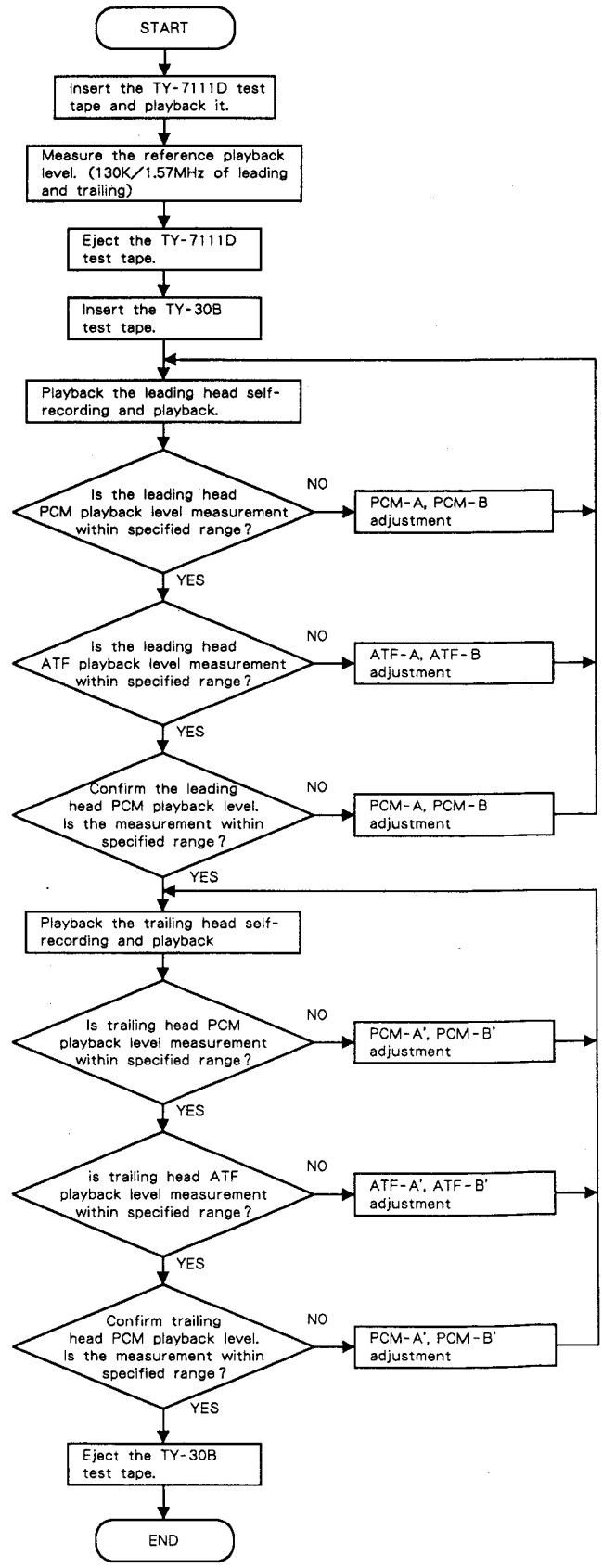

RF LEVEL CHECKER PD-817

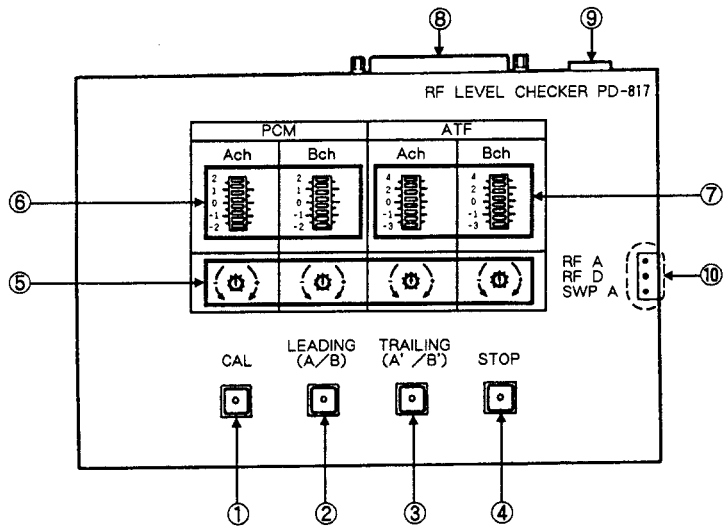

Switches

①CAL ;

Used for automatically measuring the reference level of the TY-7111D test tape. The indicator flashes during measurement. The flashing stops and the measurement is finished (the indicator lights.).

②LEADING (A, B) ;

Used for self-recording and playback (automatic measurement) of PCM and ATF of the leading head using the TY-30B test tape. The indicator flashes during self-recording and playback. The flashing stops and the measurement is finished (the indicator lights.).

③TRAILING (A, B) ;

Used for self-recording and playback (automatic measurement) of PCM and ATF of the trailing head using the TY-30B test tape. The indicator flashes during self-recording and playback. The flashing stops and the measurement is finished (the indicator lights.).

④STOP ;

Used for canceling the measurements of ①、② and ③above.

Control

⑤Offset dial ;

Used for setting the measurement level of the TY-7111D test tape in accordance with the correction value table provided with the TY-7111D test tape to be used.

Level meter

⑥PCM Ach, Bch ;

Used for displaying the measurement results compared with the reference level of the TY-7111D test tape when the leading/trailing head PCM self-recording and playback level has been measured.

⑦ATF Ach, Bch ;

Used for displaying the measurement results compared with the reference level of the TY-7111D test tape when the leading/trailing head ATF self-recording and playback level has been measured.

Connectors

⑧37-Pin remote connector (D-SUB, female) ;

Used to connect the supplied 37P parallel remote cable.

⑨6-pin connector (CN1) ;

Used to connect the supplied 6P connector with RF-EXT board.

⑩Monitor output (RF A, RF B, SWP-A) terminals ;

Used to connect the oscilloscope and monitor the RF A and RF B signals (SWP A is TRIG).

Accessories supplied

- 37P parallel remote cable : 1
- Flexible card wire 13P : 1
- RF-EXT board : 1

Connections

Note : When making the connections, be sure to turn off the power of the PCM-7050.

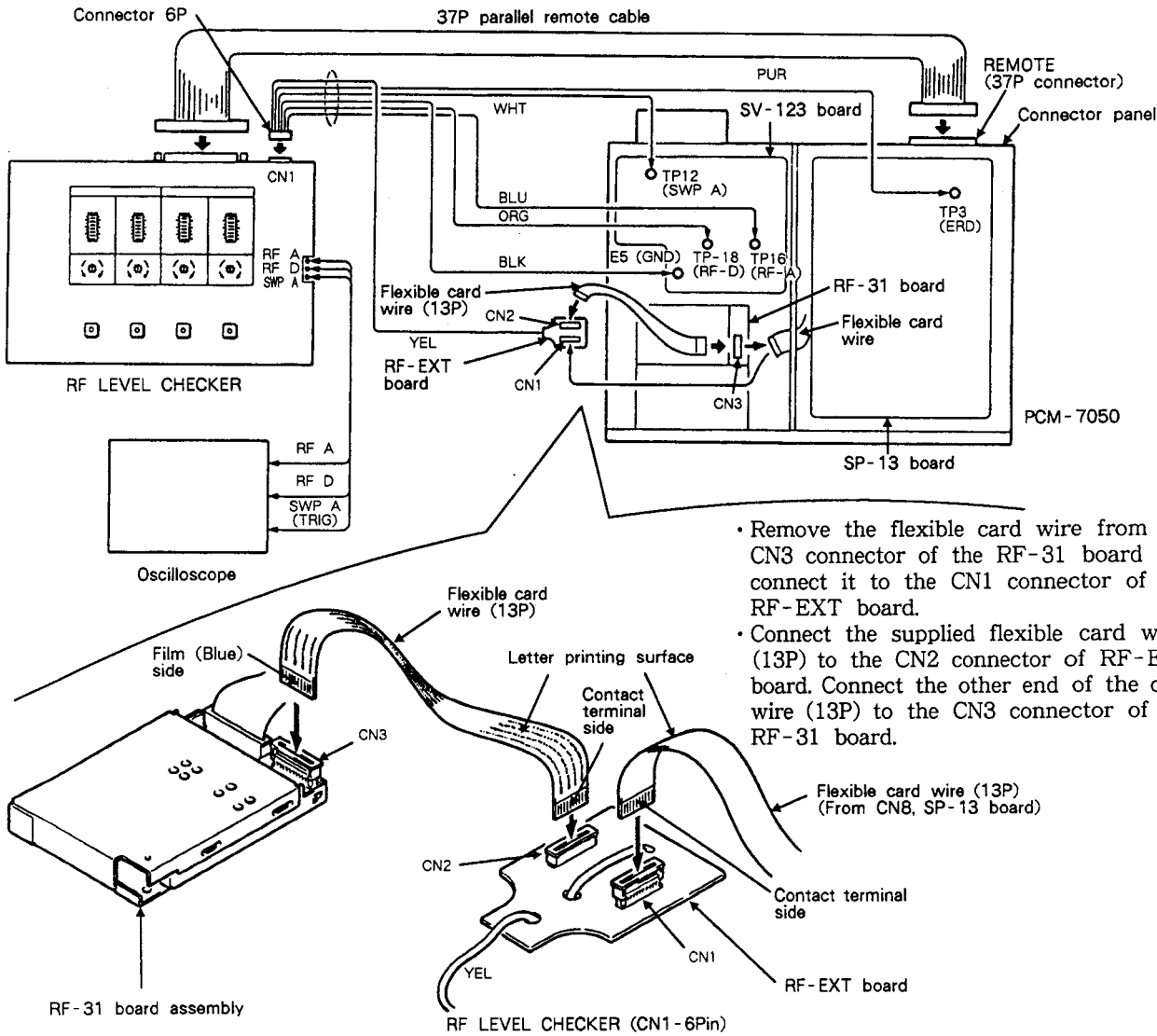

- Remove the flexible card wire from the CN3 connector of the RF-31 board and connect it to the CN1 connector of the RF-EXT board.
- Connect the supplied flexible card wire (13P) to the CN2 connector of RF-EXT board. Connect the other end of the card wire (13P) to the CN3 connector of the RF-31 board.

Measurement location

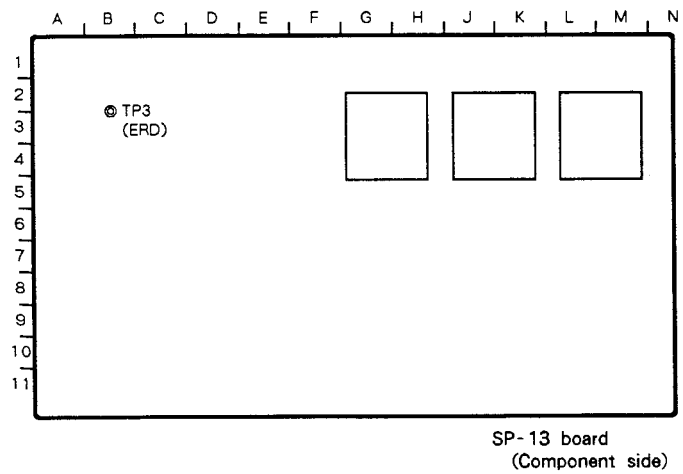

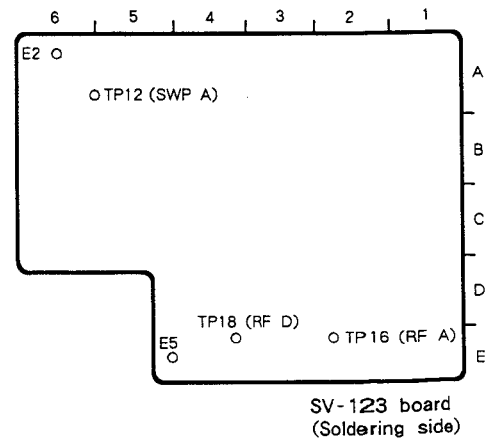

Preparations

1. Use the offset dial of the RF level checker and set the correction values of the 1.57MHz and 130KHz Ach / Bch in accordance with the correction value table provided with the TY-7111D test tape to be used.

Setting example

Example of correction value table :

	130.7 (KHz)	1.568 (MHz)
Ach	-0.1	-0.3
Bch	+ 0.2	+ 0.2

Offset dial setting (In the case of above correction values)

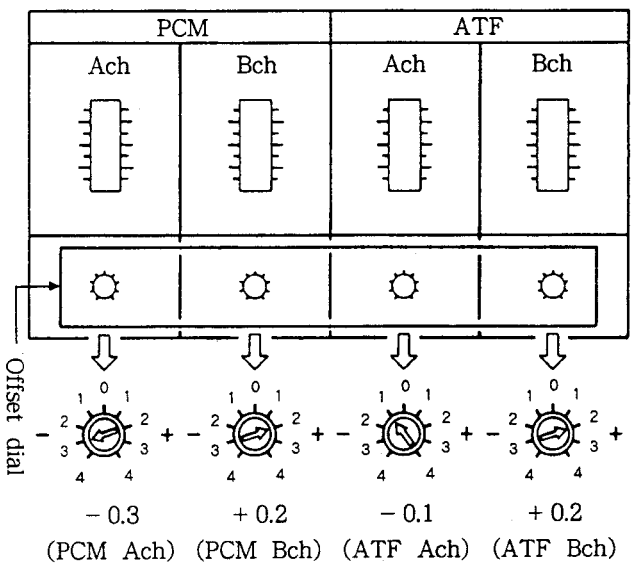

2. Set each control volume on the RF-31 board mechanically as indicated below.

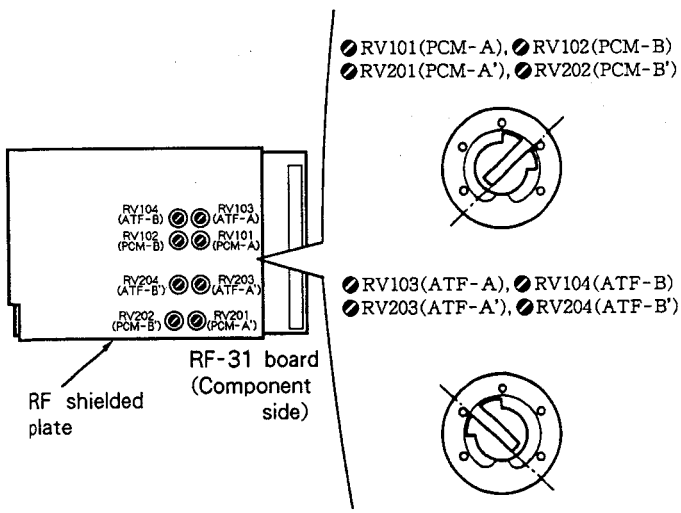

Switches and control setting

PCM-7050 front panel

SYNC mode switch ; INT (internal synchronization mode)

Adjustment location

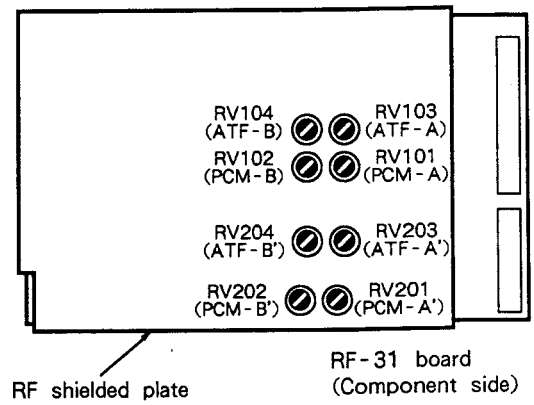

1. Leading and trailing heads PCM/ATF reference recording current level measurement (TY-7111D test tape playback level measurement)

(1) Insert the TY-7111D test tape.

(2) Press the CAL switch of the RF LEVEL CHECKER. The playback level of 1.57MHz/130KHz of the leading and trailing heads are automatically measured, The CAL indicator flashes during measurement.

(3) The flashing stops and the measurement is finished (The indicator lights.).

(4) Eject the TY-7111D test tape.

Note : Rapid Flashing of the CAL Indicator :

If the playback level data on the TY-7111D test tape cannot be fed for the 128DAT frame, the CAL indicator flashes rapidly.

In this case, perform the following procedures.

①Advance the test tape (playback portion) slightly and perform the measurement again.

②Replace the TY-7111D test tape with a new one and perform the measurement.

If the situation remains the same even when the new test tape is used, the drum may be defective. Replace the drum.

2. Leading head PCM/ATF recording current level adjustment

Notes on adjustment :

1. When adjusting ◐RV101, ◐RV102, ◐RV103, and ◐RV104 be aware of the following items.

1) Mutual relationship between Ach and Bch of PCM adjustment level

- When adjusting the level of the Ach (Bch) indicator to high, the level of the Bch (Ach) indicator will drop slightly.
- When adjusting the level of the Ach (Bch) indicator to low, the level of the Bch (Ach) indicator will drop slightly.

2) Mutual relationship between PCM level and ATF level

- When adjusting the level of the Ach PCM indicator to high (low), the level of the Ach ATF indicator will increase (drop) slightly.
- When adjusting the level of the Bch PCM indicator to high (low), the level of the Bch ATF indicator will increase (drop) slightly.

2. Note on the test menu settings when the TY-30B test tape is loaded.

The test menu "tESt SiG A-tESt in" previously set, will be voided if the tape is repeatedly loaded and ejected. In this case, the test menu "tESt SiG A-tESt in" should be set again otherwise recordings are not possible.

Leading head PCM (Ach, Bch) recording current level adjustment

(1) Load the TY-30B test tape (blank).

(2) Enter (OPEN) the SERVICE MENU and set the following TEST MENU mode.

FL tube display message : tESt SiG A-tSt in

(The ALARM indicator flashes and the ASSEMBLE key indicator lights.)

(3) Press the LEADING switch of the RF level checker to perform the self-recording and playback (automatic measurement).

The LEADING switch indicator flashes during self-recording and playback. The flashing stops and the measurement is finished (The indicator lights.).

Note : If the TY-30B test tape to be used already has a recording, the tape will play for 15 seconds and then stop. If this happens, replace the TY-30B test tape with a blank tape and retry from step (3).

(4) Make sure the level meter indication (Ach and Bch PCM levels) of the RF level checker complies with the following specifications.

If the playback Ach and Bch PCM levels do not comply with the specifications, adjust ◐RV101 and ◐RV102 on the RF-31 board as indicated below.

If the indication level of a level meter is higher than the specifications :

- Leading head Ach PCM level ;

Turn ◐RV101 counterclockwise.

- Leading head Bch PCM level ;

  Turn ◐RV102 counterclockwise.

If the indication level of a level meter is lower than the specifications :

- Leading head Ach PCM level ;

  Turn ◐RV101 clockwise.

- Leading head Bch PCM level ;

  Turn ◐RV102 clockwise.

Specifications :

Level indicators of the PCM (Ach, Bch) level meter of the RF LEVEL CHECKER = Light indicators between 0dB and 1dB.

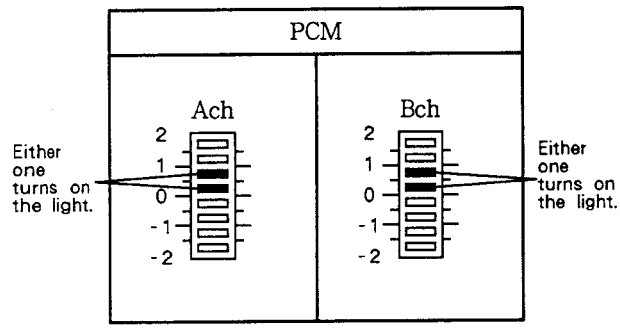

Adjustment : ◐RV101 (Ach, PCM), RF-31 board
◐RV102 (Bch, PCM), RF-31 board

Note : Rapid flashing of the LEADING switch indicator means that enough data cannot be gathered for the 128 DAT frame because the recording current level is considerably lower than the reference level. In this case, the indicator flashes rapidly.

Under this condition, adjust the control volume (turn ◐RV101 and ◐RV102 clockwise). Perform the measurement by pressing the LEADING switch again.

If the same condition occurs even when you increase the recording level to maximum (by turning ◐RV101 and ◐RV102 clockwise), the TY-30B test tape may be slack or the drum may be defective. Therefore, replace the TY-30B test tape or the drum with new ones.

(5) Repeat steps (3) and (4) until you get the playback level that complies with the specifications indicated in step (4).

Leading head ATF (Ach, Bch) recording current level adjustment

(6) Press the LEADING switch of the RF LEVEL CHECKER to perform the self-recording and playback (automatic measurement).

The LEADING switch indicator flashes during self-recording and playback. The flashing stops and the measurement is finished (the indicator lights.).

(7) Make sure the level meter indication (leading head Ach and Bch ATF level) of the RF LEVEL CHECKER complies with the following specifications.

If the playback Ach and Bch ATF levels do not comply with the specifications, adjust ◐RV103 and ◐RV104 on the RF-31 board as indicated below.

If the indication level of a level meter is higher than the specifications :

- Leading head Ach ATF level ;

  Turn ◐RV103 counterclockwise.

- Leading head Bch ATF level ;

  Turn ◐RV104 counterclockwise.

If the indication level of a level meter is lower than the specifications :

- Leading head Ach ATF level ;

  Turn ◐RV103 clockwise.

- Leading head Bch ATF level ;

  Turn ◐RV104 clockwise.

Specifications :

Level indicators of the ATF (Ach, Bch) level meter of the RF LEVEL CHECKER = Light indicators between -1dB and 0dB.

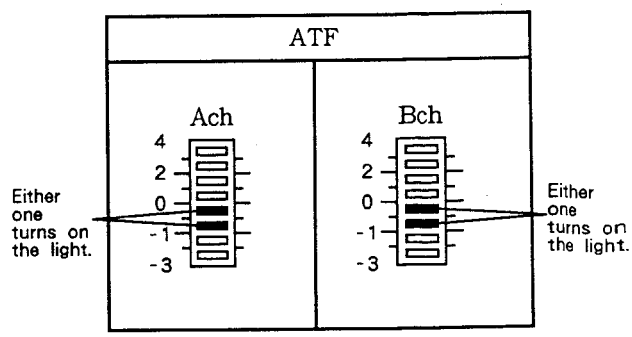

Adjustment : ◐RV103 (Ach, ATF), RF-31 board
◐RV104 (Bch, ATF), RF-31 board

(8) Repeat steps (6) and (7) until you get the playback level that complies with the specifications indicated in step (7).

(9) After adjusting the ATF level, make sure the PCM (Ach, Bch) level indication complies with the specifications indicated in step (4).
If the PCM level does not comply with the specifications, make adjustments as indicated in step (3) onwards.

3. Trailing head PCM/ATF recording current level adjustment

Notes on adjustment :

1. When adjusting ⊘RV201, ⊘RV202, ⊘RV203, and ⊘RV204 be aware of the following items.
   1) Mutual relationship between Ach and Bch of PCM adjustment level
      - When adjusting the level of the Ach (Bch) indicator to high, the level of the Bch (Ach) indicator will drop slightly.
      - When adjusting the level of the Ach (Bch) indicator to low, the level of the Bch (Ach) indicator will drop slightly.
   2) Mutual relationship between PCM level and ATF level
      - When adjusting the level of the Ach PCM indicator to high (low), the level of the Ach ATF indicator will increase (drop) slightly.
      - When adjusting the level of the Bch PCM indicator to high (low), the level of the Bch ATF indicator will increase (drop) slightly.
2. Note on the test menu settings when the TY-30B test tape is loaded.
   The test menu "tESt SiG d-tESt in" previously set, will be voided if the tape is repeatedly loaded and ejected. In this case, the test menu "tESt SiG d-tESt in" should be set again otherwise recordings are not possible.

Trailing head PCM (Ach, Bch) recording current level adjustment

(1) Insert the TY-30B test tape (blank).

(2) Enter (OPEN) the SERVICE MENU and select the following TEST MENU mode.
FL tube display message : tESt SiG d-tSt in
(Only the ALARM indicator flashes.)

(3) Press the TRAILING switch of the RF level checker to perform the self-recording and playback (automatic measurement).
The TRAILING switch indicator flashes during self-recording and playback. The flashing stops and the measurement is finished (The indicator lights.)

(4) Make sure the level meter indication (Ach and Bch PCM level) of the RF level checker complies with the following specifications.
If the playback Ach and Bch PCM levels do not comply with the specifications, adjust ⊘RV201 and ⊘RV202 on the RF-31 board as indicated below.
If the indication level of a level meter is higher than the specifications :
- Trailing head Ach PCM level ;
  Turn ⊘RV201 counterclockwise.
- Trailing head Bch PCM level ;
  Turn ⊘RV202 counterclockwise.

If the indication level of a level meter is lower than the specifications :
- Trailing head Ach PCM level ;
  Turn ⊘RV201 clockwise.
- Trailing head Bch PCM level ;
  Turn ⊘RV202 clockwise.

Specifications :
Level indicators of the PCM (Ach, Bch) level meter of the RF LEVEL CHECKER = Light indicators between 0dB and 1dB.

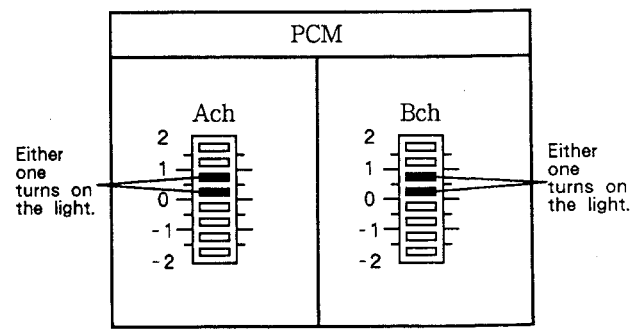

Adjustment : ⊘RV201 (Ach, PCM), RF-31 board
⊘RV202 (Bch, PCM), RF-31 board

Note : Rapid flashing of the TRAILING switch indicator means that enough data cannot be gathered for the 128DAT frame because the recording current level is considerably lower than the reference level. In this case, the indicator flashes rapidly.
Under this condition, adjust the control volume (turn ◐RV201 and ◐RV202 clockwise). Perform the measurement by pressing the TRAILING switch again.
If the same condition occurs even when you increase the recording level to maximum (by turning ◐RV201 and ◐RV202 clockwise), the TY-30B test tape may be slack or the drum may be defective. Therefore, replace the TY-30B test tape or the drum with new ones.

(5) Repeat steps (3) and (4) until you get the playback level that complies with the specifications indicated in step (4).

Trailing head ATF (Ach, Bch) recording current level adjustment

(6) Press the TRAILING switch of the RF LEVEL CHECKER to perform the self-recording and playback (automatic measurement).
The TRAILING switch indicator flashes during self-recording and playback. The flashing stops and the measurement is finished (The indicator lights.).

(7) Make sure the level meter indication (trailing head Ach and Bch ATF level) of the RF LEVEL CHECKER complies with the following specifications.
If the playback Ach and Bch ATF levels do not comply with the specifications, adjust ◐RV203 and ◐RV204 on the RF-31 board as indicated below.
If the indication level of a level meter is higher than the specifications :
- Trailing head Ach ATF level ;
  Turn ◐RV203 counterclockwise.
- Trailing head Bch ATF level ;
  Turn ◐RV204 counterclockwise.

If the indication level of a level meter is lower than the specifications :
- Trailing head Ach ATF level ;
  Turn ◐RV203 clockwise.
- Trailing head Bch ATF level ;
  Turn ◐RV204 clockwise.

Specifications :
Level indicators of the ATF (Ach, Bch) level meter of the RF LEVEL CHECKER = Light indicators between -1dB and 0dB.

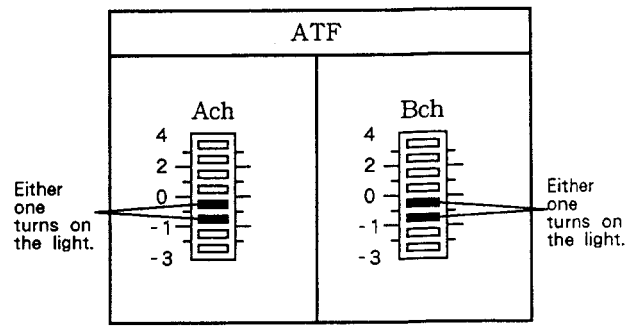

Adjustment : ◐RV203 (Ach, ATF), RF-31 board
◐RV204 (Bch, ATF), RF-31 board

(8) Repeat steps (6) and (7) until you get the playback level that complies with the specifications indicated in step (7).

(9) After adjusting the ATF level, make sure the PCM (Ach, Bch) level indication complies with the specifications indicated in step (4).
If the PCM level does not comply with the specifications, make adjustments as indicated in step (3) onwards.

4-6-2. Adjustment using a spectrum analyzer

This section provides information on the adjustment method using the spectrum analyzer. Follow the sequence below to make adjustments :

Adjustment Location

1. Leading head PCM recording current level adjustment
2. Leading head ATF recording current level adjustment
3. Trailing head PCM recording current level adjustment
4. Trailing head ATF recording current level adjustment

Note : Perform the adjustment while the cassette compartment is mounted in the mechanical deck.

Equipment and Tools Required

Spectrum analyzer
Oscilloscope
TY-7111D Test tape (8-909-820-00)
TY-30B test tape (8-892-358-00)

Connections

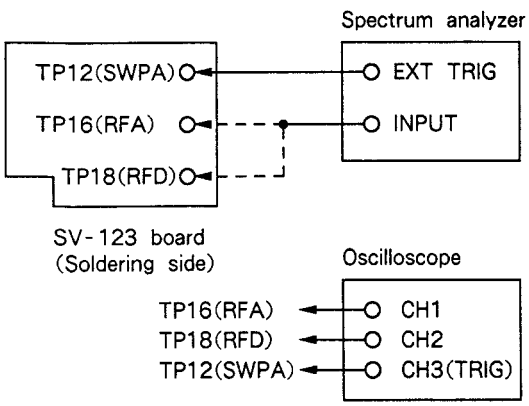

Adjustment Location

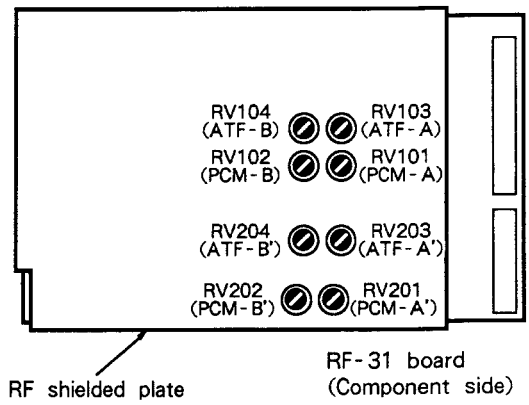

Measurement Location

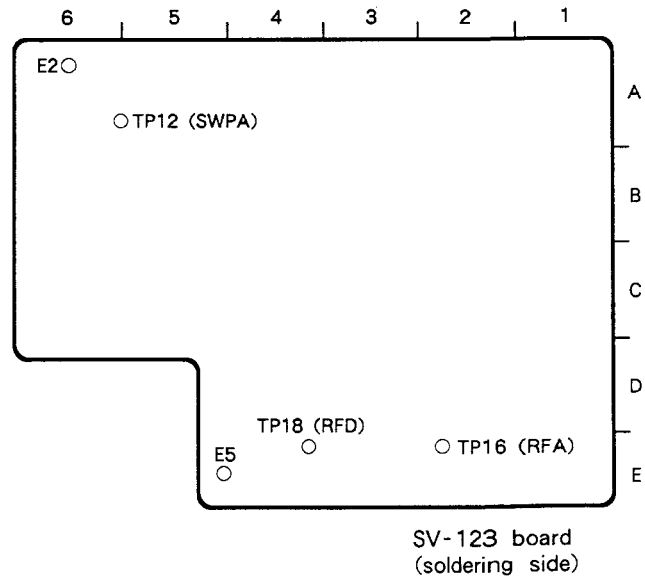

1. Leading head PCM recording current level adjustment

Leading head A ch recording current level adjustment

(1) Connect the spectrum analyzer to the SV-123 board as shown below.

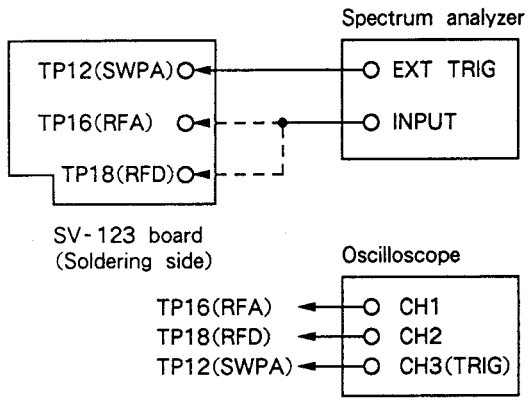

(2) Set the spectrum analyzer as indicated below.

Center frequency	: 1.57MHz
Reference level	: -25dBm
Frequency span	: 0Hz
Resolution Bandwidth (RBW)	: 30kHz
Video Bandwidth (VBW)	: 300kHz
Input ATT	: 10dB
SWP	: 30msec.

(3) Load the TY-7111D test tape and play the tape.

(4) Find the average of the RF output waveforms using the spectrum analyzer and store the data in the spectrum analyzer memory.

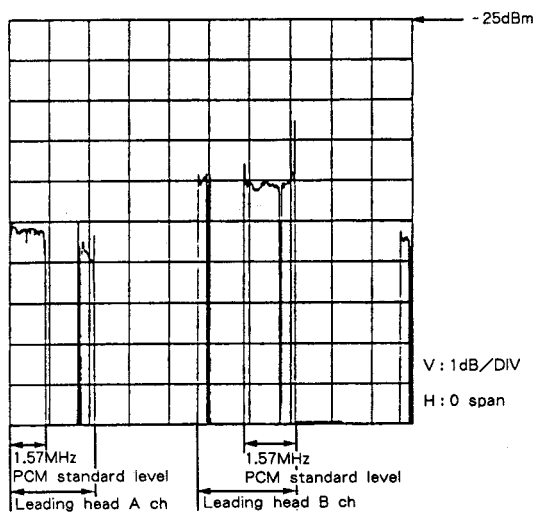

(5) Press EJECT to remove the TY-7111D test tape.

(6) Load the TY-30B test tape (blank).

Note : You need to load the TY-30B test tape to specify the "tESt SiG A-157_13" of the TEST MENU.

(7) Enter (OPEN) the SERVICE MENU and select the following TEST MENU mode.

FL tube display message : tESt SiG oFF

(8) Hold down the DATA key and turn the SEARCH dial clockwise until the following message appears. Then, press SET.

FL tube display message : tESt SiG A-157_13 (flashing → ON)

(9) Press REC and PLAY to record the test signal specified in step (7) (for about 30 seconds).

Note : Since the time code will not be recorded in this mode, specify the display counter mode and use it as a guide to find the recorded portion of a tape.

(10) Playback the portion of the TY-30B test tape recorded in step (9).

(11) Make sure the playback Leading head A ch PCM level (TY-30B test tape) of the spectrum analyzer complies with the following specifications against the previously stored standard Leading head A ch PCM level (TY-7111D test tape). If the playback Leading head A ch PCM level does not comply with the specifications, adjust ◐RV101 on the RF-31 board as indicated below.

If the playback level is higher than the specifications, turn ◐RV101 counterclockwise.

If the playback level is lower than the specifications, turn ◐RV101 clockwise.

Specifications :

TY-30B test tape playback level (Leading head A ch) = (Standard level * + 0.5dB) ± 0.5dB

* Standard level = Playback level of the TY-7111D test tape ± correction value (See the correction value table provided with the TY-7111D test tape for the correction value you should use.)

Adjustment Location : ◐RV101, RF-31 board

(12) Repeat steps (6) to (11) until you get the playback level that complies with the specifications indicated in step (10).(Repeat the self-recording and playback.)

Caution : Be careful not to overwrite the TY-30B test tape when you perform the recording.

Leading head B ch recording current level adjustment

(13) Hold down the DATA key and turn the SEARCH dial counterclockwise until the following message appears. Then, press SET.(Set the mode during the STOP mode.)

FL tube display message : tESt SiG A-13_157 (flashing→ON)

(14) Press REC and PLAY to record the test signal specified in step (13) using the TY-30B test tape (for about 30 seconds).

(15) Playback the portion of the TY-30B test tape recorded in step (14).

(16) Make sure the playback Leading head B ch PCM level (TY-30B test tape) of the spectrum analyzer complies with the following specifications against the previously stored standard Leading head B ch PCM level (TY-7111D test tape). If the playback Leading head B ch PCM level does not comply with the specifications, adjust ◐RV102 on the RF-31 board as indicated below.

If the playback level is higher than the specifications, turn ◐RV102 counterclockwise.

If the playback level is lower than the specifications, turn ◐RV102 clockwise.

Specifications :

TY-30B test tape playback level (Leading head B ch) = (Standard level * + 0.5dB) ± 0.5dB

* Standard level = Playback level of the TY-7111D test tape ± correction value (See the correction value table provided with the TY-7111D test tape for the correction value you should use.)

Adjustment Location : ◐RV102, RF-31 board

(17) Repeat steps (14) to (16) until you get the playback level that complies with the specifications indicated in step (16).(Repeat the self-recording and playback.)

(18) Since ◐RV101 and ◐RV102 affect each other, perform steps (6) to (11) after you adjust ◐RV102 to confirm that the A ch PCM level complies with the specifications indicated in step (11).

(19) After you adjust the Leading head PCM recording current level, be sure to adjust the "2. Leading head ATF recording current level".

2. Leading head ATF recording current level adjustment

Be sure to adjust the Leading head ATF recording current level when you adjust the "1. Leading head PCM recording current level".

Leading head A ch ATF recording current level adjustment

(1) Connect the spectrum analyzer to the SV-123 board as shown below.

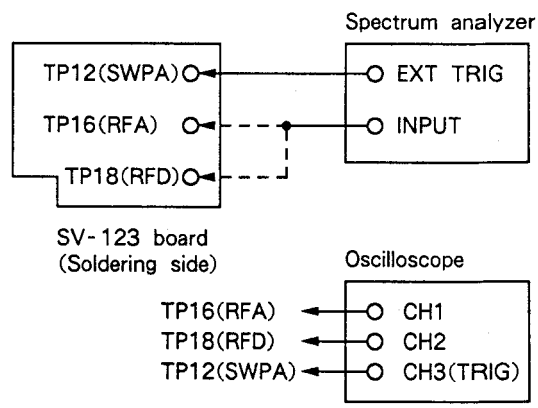

(2) Set the spectrum analyzer as indicated below.

Center frequency	: 130kHz
Reference level	:-45.0dBm
Frequency span	: 0Hz
Resolution Bandwidth (RBW)	: 30kHz
Video Bandwidth (VBW)	: 300kHz
Input ATT	: 10dB
SWP	: 30msec.

(3) Load the TY-7111D test tape and play the tape.

(4) Find the average of the RF output waveforms using the spectrum analyzer and store the data in the spectrum analyzer memory.

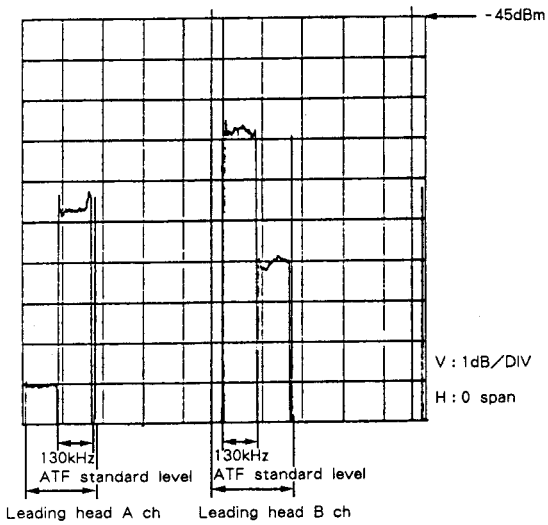

(5) Press EJECT to remove the TY-7111D test tape.

(6) Load the TY-30B test tape (blank).

(7) Select the following TEST MENU mode.
FL tube display message : tESt SiG A-13_157
(flashing→ON)

(8) Press REC and PLAY to record the test signal specified in step (7) (for about 30 seconds).

(9) Playback the portion of the TY-30B test tape recorded in step (8).

(10) Make sure the playback A ch ATF level (TY-30B test tape) of the spectrum analyzer complies with the following specifications against the previously stored standard playback A ch ATF level (TY-7111D test tape). If the playback A ch ATF level does not comply with the specifications, adjust ◐RV103 on the RF-31 board as indicated below.
If the playback level is higher than the specifications, turn ◐RV103 counterclockwise.
If the playback level is lower than the specifications, turn ◐RV103 clockwise.
Specifications :
TY-30B test tape playback level (Leading head A ch ATF) = (Standard level*- 0.5dB) ±0.5dB
* Standard level = Playback level of the TY-7111D test tape ± correction value (See the correction value table provided with the TY-7111D test tape for the correction value you should use.)
Adjustment Location : ◐RV103, RF-31 board

(11) Repeat steps (6) to (10) until you get the playback level that complies with the specifications indicated in step (10).(Repeat the self-recording and playback.)

Leading head B ch ATF recording current level adjustment

(12) Hold down the DATA key and turn the SEARCH dial counterclockwise until the following message appears. Then, press SET.(Set the mode during the STOP mode.)
FL tube display message : tESt SiG A-157_13
(flashing→ON)

(13) Press REC and PLAY to record the test signal specified in step (12) using the TY-30B test tape (for about 30 seconds).

(14) Playback the portion of the TY-30B test tape recorded in step (13).

(15) Make sure the playback B ch ATF level (TY-30B test tape) of the spectrum analyzer complies with the following specifications against the previously stored standard playback B ch ATF level (TY-7111D test tape). If the playback B ch ATF level does not comply with the specifications, adjust ◐RV104 on the RF-31 board as indicated below.
If the playback level is higher than the specifications, turn ◐RV104 counterclockwise.
If the playback level is lower than the specifications, turn ◐RV104 clockwise.
Specifications :
TY-30B test tape playback level (Leading head B ch ATF) = (Standard level*- 0.5dB) ±0.5dB
* Standard level = Playback level of the TY-7111D test tape ± correction value (See the correction value table provided with the TY-7111D test tape for the correction value you should use.)
Adjustment Location : ◐RV104, RF-31 board

(16) Repeat steps (13) to (15) until you get the playback level that complies with the specifications indicated in step (15).(Repeat the self-recording and playback.)

3. Trailing head PCM recording current level adjustment

Trailing head A ch recording current level adjustment

(1) Connect the spectrum analyzer to the SV-123 board as shown below.

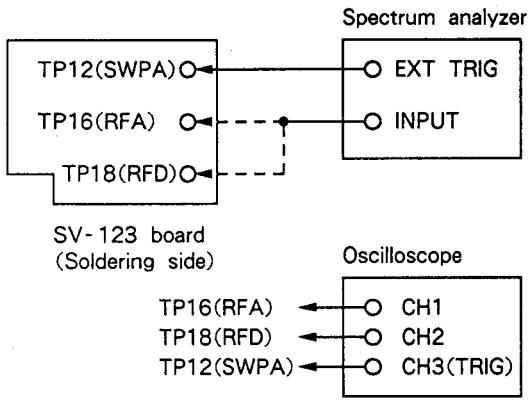

(2) Set the spectrum analyzer as indicated below.

Center frequency	: 1.57MHz
Reference level	: -25dBm
Frequency span	: 0Hz
Resolution Bandwidth (RBW)	: 30kHz
Video Bandwidth (VBW)	: 300kHz
Input ATT	: 10dB
SWP	: 30msec.

(3) Load the TY-7111D test tape and play the tape.

(4) Find the average of the RF output waveforms using the spectrum analyzer and store the data in the spectrum analyzer memory.

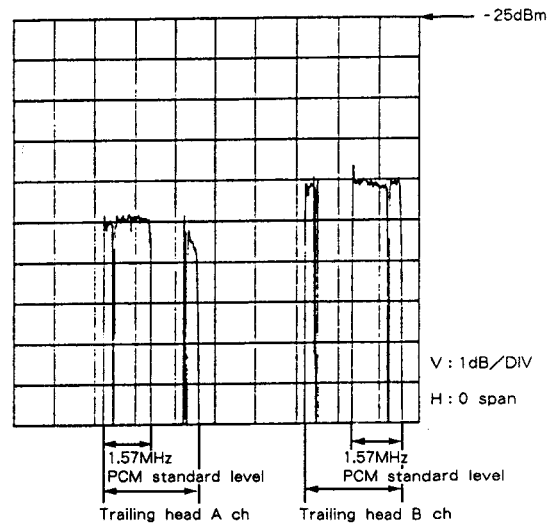

(5) Press EJECT to remove the TY-7111D test tape.

(6) Load the TY-30B test tape (blank).

(7) Enter (OPEN) the SERVICE MENU and select the following TEST MENU mode.
FL tube display message : tESt SiG oFF

(8) Hold down the DATA key and turn the SEARCH dial clockwise until the following message appears. Then, press SET.
FL tube display message : tESt SiG D-157_13
(flashing → ON)

(9) Press REC and PLAY to record the test signal specified in step (7) (for about 30 seconds).

(10) Playback the portion of the TY-30B test tape recorded in step (9).

(11) Make sure that the Trailing head playback A ch PCM level (TY-30B test tape) of the spectrum analyzer complies with the following specifications against the previously stored standard Trailing head A ch PCM level (TY-7111D test tape). If the Trailing head playback A ch PCM level does not comply with the specifications, adjust ⊘RV201 on the RF-31 board as indicated below.
If the playback level is higher than the specifications, turn ⊘RV201 counterclockwise.
If the playback level is lower than the specifications, turn ⊘RV201 clockwise.

Specifications :

TY-30B test tape playback level (Trailing head A ch PCM) = (Standard level * + 0.5dB) ± 0.5dB

* Standard level = Playback level of the TY-7111D test tape ± correction value (See the correction value table provided with the TY-7111D test tape for the correction value you should use.)

Adjustment Location : ●RV201, RF-31 board

(12) Repeat steps (6) to (11) until you get the playback level that complies with the specifications indicated in step (10).(Repeat the self-recording and playback.)

Caution : Be careful not to overwrite the TY-30B test tape when you perform the recording.

Trailing head B ch PCM recording current level adjustment

(13) Hold down the DATA key and turn the SEARCH dial counterclockwise until the following message appears. Then, press SET.(Set the mode during the STOP mode.)

FL tube display message : tESt SiG D-13_157 (flashing→ON)

(14) Press REC and PLAY to record the test signal specified in step (13) using the TY-30B test tape (for about 30 seconds).

(15) Playback the portion of the TY-30B test tape recorded in step (14).

(16) Make sure the playback Trailing head B ch PCM level (TY-30B test tape) of the spectrum analyzer complies with the following specifications against the previously stored standard Trailing head B ch PCM level (TY-7111D test tape). If the playback Trailing head B ch PCM level does not comply with the specifications, adjust ●RV202 on the RF-31 board as indicated below.

If the playback level is higher than the specifications, turn ●RV202 counterclockwise.

If the playback level is lower than the specifications, turn ●RV202 clockwise.

Specifications :

TY-30B test tape playback level (Trailing head B ch PCM) = (Standard level * + 0.5dB) ± 0.5dB

* Standard level = Playback level of the TY-7111D test tape ± correction value (See the correction value table provided with the TY-7111D test tape for the correction value you should use.)

Adjustment Location : ●RV202, RF-31 board

(17) Repeat steps (14) to (16) until you get the playback level that complies with the specifications indicated in step (16).(Repeat the self-recording and playback.)

(18) Since ●RV201 and ●RV202 affect each other, perform steps (6) to (11) after you adjust ● RV202 to make sure the A ch PCM level complies with the specifications indicated in step (11).

(19) After you adjust the Trailing head PCM recording current level, be sure to adjust the "4. Trailing head ATF recording current level".

4. Trailing head ATF recording current level adjustment

Be sure to adjust the Trailing head ATF recording current level when you adjust the "3. Trailing head PCM recording current level".

Trailing head A ch ATF recording current level adjustment

(1) Connect the spectrum analyzer to the SV-123 board as shown below.

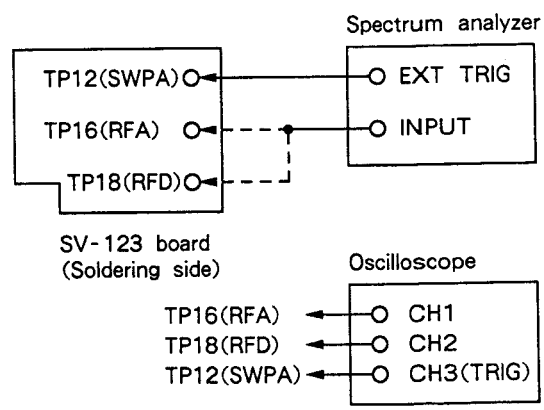

(2) Set the spectrum analyzer as indicated below.

Center frequency	: 130kHz
Reference level	: -45.0dBm
Frequency span	: 0Hz
Resolution Bandwidth (RBW)	: 30kHz
Video Bandwidth (VBW)	: 300kHz
Input ATT	: 10dB
SWP	: 30msec.

(3) Load the TY-7111D test tape and play the tape.

(4) Find the average of the RF output waveforms using the spectrum analyzer and store the data in the spectrum analyzer memory.

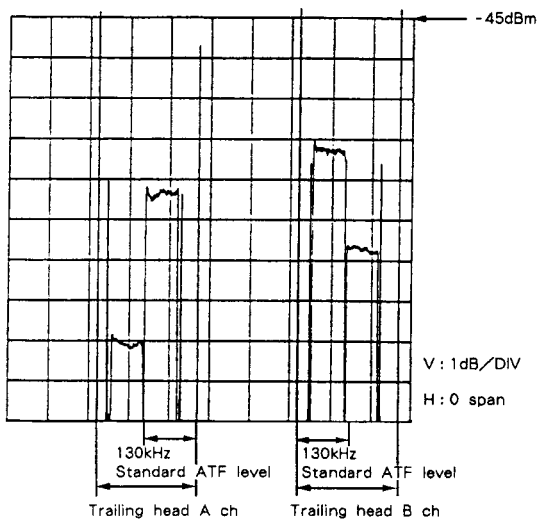

(5) Press EJECT to remove the TY-7111D test tape.

(6) Load the TY-30B test tape (blank).

(7) Select the following TEST MENU mode.
FL tube display message : tESt SiG D-13_157

(8) Press REC and PLAY to record the test signal specified in step (7) (for about 30 seconds).

(9) Playback the portion of the TY-30B test tape recorded in step (8).

(10) Make sure the playback Trailing head A ch ATF level (TY-30B test tape) of the spectrum analyzer complies with the following specifications against the previously stored standard playback A ch ATF level (TY-7111D test tape). If the playback Trailing head A ch ATF level does not comply with the specifications, adjust ◐RV203 on the RF-31 board as indicated below.

If the playback level is higher than the specifications, turn ◐RV203 counterclockwise.
If the playback level is lower than the specifications, turn ◐RV203 clockwise.
Specifications :
TY-30B test tape playback level (Trailing head A ch ATF) = (Standard level * - 0.5dB) ± 0.5dB
* Standard level = Playback level of the TY-7111D test tape ± correction value (See the correction value table provided with the TY-7111D test tape for the correction value you should use.)
Adjustment Location : ◐RV203, RF-31 board

(11) Repeat steps (6) to (10) until you get the playback level that complies with the specifications indicated in step (10). (Repeat the self-recording and playback.)

Trailing head B ch ATF recording current level adjustment

(12) Hold down the DATA key and turn the SEARCH dial counterclockwise until the following message appears. Then, press SET. (Set the mode during the STOP mode.)
FL tube display message : tESt SiG D-157_13 (flashing → ON)

(13) Press REC and PLAY to record the test signal specified in step (12) using the TY-30B test tape (for about 30 seconds).

(14) Playback the portion of the TY-30B test tape recorded in step (13).

(15) Make sure the playback B ch ATF level (TY-30B test tape) of the spectrum analyzer complies with the following specifications against the previously stored standard playback B ch ATF level (TY-7111D test tape). If the playback B ch ATF level does not comply with the specifications, adjust ◐RV204 on the RF-31 board as indicated below.
If the playback level is higher than the specifications, turn ◐RV204 counterclockwise.
If the playback level is lower than the specifications, turn ◐RV204 clockwise.

Specifications :

TY-30B test tape playback level (Trailing head B ch ATF) = (Standard level * - 0.5dB) ± 0.5dB

* Standard level = Playback level of the TY-7111D test tape ± correction value (See the correction value table provided with the TY-7111D test tape for the correction value you should use.)

Adjustment Location : ◐RV204, RF-31 board

(16) Repeat steps (13) to (15) until you get the playback level that complies with the specifications indicated in step (15).(Repeat the self-recording and playback.)

4-7. EQ-H preset (RF-31 board) and error rate check

4-7-1. EQ-H preset (RF-31 board)

The LTS voltage control volume ●RV105 (EQ-H) and ● RV205 (EQ-H') on the RF-31 board are set as follows when it is shipped. Follow the set procedure below after the replacement of ●RV105 or ●RV205.

Specifications :

Set ● RV105 (EQ-H) and ● RV205 (EQ-H') automatically as shown below (set as when it is shipped) :

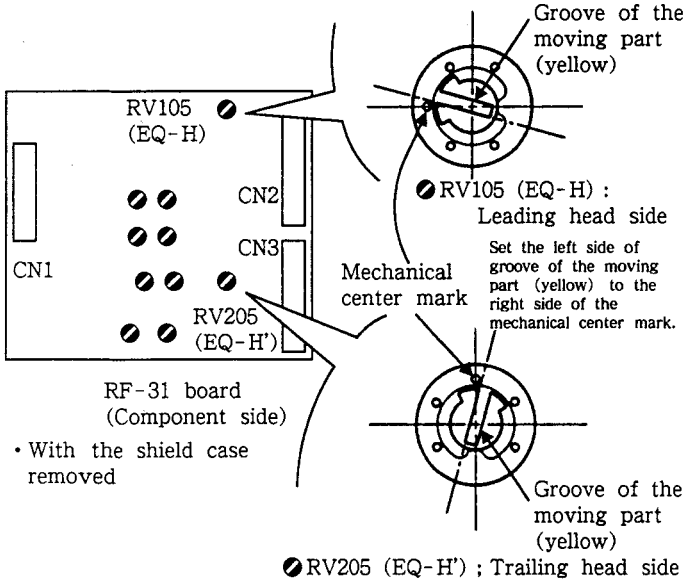

4-7-2. Error Rate Check

Check the error rate after performing "5-2. Signal Processing Adjustment (SP-13 board)" (page 5-5) when you removal the mechanical deck assembly, drum assembly SP-13 board and RF-31 board. Follow the sequence below for checking : 4-41 page

Equipment and Tools Required

Audio frequency oscillator
TY-30B Test tape (8-892-358-00)
TY-7212 Test tape (8-960-081-01)

Switch and Control Settings

Front panel

REMOTE/LOCAL selection switch	: LOCAL
SYNC Select switch	: INT
AUDIO INPUT Select switch	: ANALOG
SAMPLING FREQ Select switch	: 48kHz
CH1 ANALOG INPUT level control	: Center detent position
CH2 ANALOG INPUT level control	: Center detent position
INPUT MONITOR key	: ON
Recording mode setting key	: ASSEMBLE

Connector panel

600-ohm ON/OFF switch	: ON

Connections

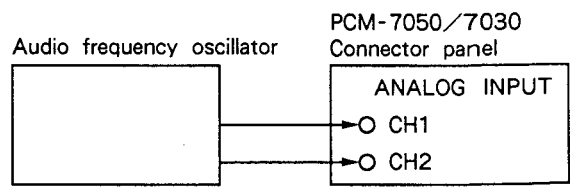

Error rate check procedure

1. Leading head recording • leading head playback error rate check (inc. ± 12.5 % VARI SPEED check)
2. Leading head recording • trailing head playback error rate check (exc. ± 12.5 % VARI SPEED check)
3. Trailing head recording • trailing head playback error rate check (inc. ± 12.5 % VARI SPEED check)
4. Trailing head recording • leading head playback error rate check (exc. ± 12.5 % VARI SPEED check)

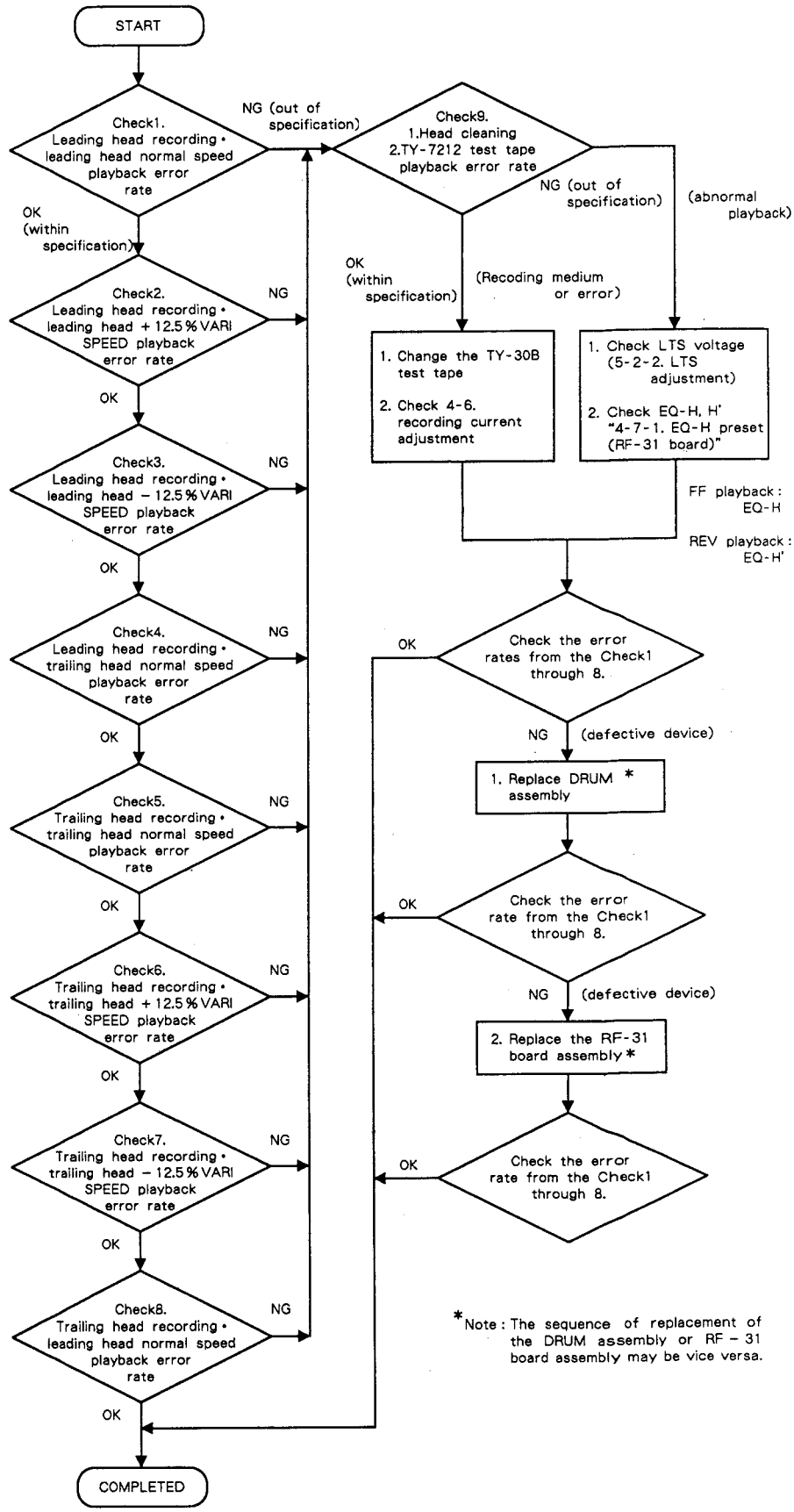

*Note : The sequence of replacement of the DRUM assembly or RF − 31 board assembly may be vice versa.

1. Leading head recording • leading head playback error rate check (Including ± 12.5 % VARI SPEED check)

Check1. Leading head recording•leading head normal speed playback error rate

(1) Transmit a 1kHz, standard level input signal (sine-wave) to the ANALOG INPUT CH1 and CH2 connectors from the low frequency oscillator.

(2) Adjust the CH1 and CH2 ANALOG INPUT level controls so that the level meter pointer on the front panel shows full deflection.

(3) Set the "SYnc rEc" mode of SET-UP MENU to "oFF" to select the RAW mode (leading head recording) and press the [ASSEMBLE] key. Load the TY-30B test tape (blank) and record the signal specified in step (2) for about 2 minutes. After recording, rewind the tape to the beginning of the recorded portion.

(4) Select the following TEST MENU mode (the following message will appear).
FL tube display message : rAtE SEL Auto

(5) Hold down the [DATA] key and turn the [SEARCH] dial clockwise until the following message appears. Then, press [SET].
FL tube display message : rAtE SEL A-Ab

(6) Hold down the [MENU] key and turn the [SEARCH] dial clockwise to select the following TEST MENU mode (turn the dial until the following message appears). Then, press [SET].
FL tube display message : Err rAtE

(7) Press [PLAY] and play the TY-30B test tape.

(8) Make sure the error rate displayed on the FL tube display 6 seconds after playback starts complies with the following specifications (the average of error rates for about 30 seconds).
Specifications :
Leading head recording • leading head normal speed playback error rate = 5 x 10^{-3} or less
Sample message appears on the display :
5_8-4→5.8 x 10^{-4}

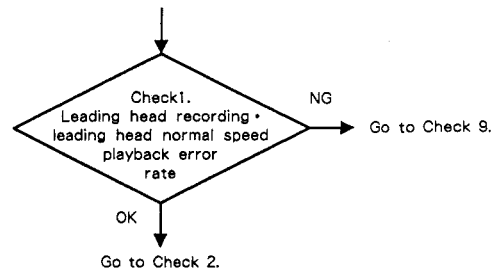

(9) Press [STOP] key.

Check2. Leading head recording•leading head + 12.5% VARI SPEED playback error rate

(10) Press [VARI SPEED]

(11) Hold down the [DATA] key and turn the [SEARCH] dial clockwise until the following message appears.
FL tube display message : 12 5 %

(12) Hold down the [MENU] key and turn the [SEARCH] dial clockwise to select the following TEST MENU mode (turn the dial until the following message appears).
FL tube display message : Err rAtE

(13) Make sure the error rate displayed on the FL tube display complies with the following specifications (the average of error rates for about 10 seconds).
Specifications :
Leading head recording • leading head + 12.5% VARI SPEED playback error rate = 9.9 x 10^{-3} or less

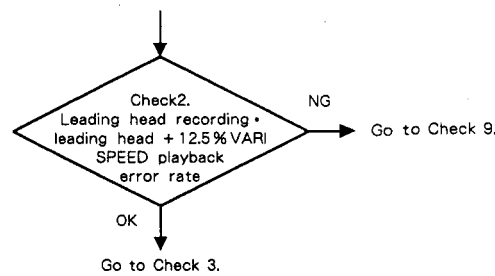

Check3. Leading head recording•leading head -12.5% VARI SPEED playback error rate

(14) Press [VARI SPEED] twice.

(15) Press [DATA] and [RESET] simultaneously (resets the VARI SPEED to 0%). Then, Hold down the

DATA key and turn the SEARCH dial counterclockwise until the following message appears.

FL tube display message : -12 5 %

(16) Hold down the MENU key and turn the SEARCH dial slightly clockwise until the following message appears.

FL tube display message : Err rAtE

(17) Make sure the error rate displayed on the FL tube display complies with the following specifications (the average of error rates for about 10 seconds).

Specifications :

Leading head recording • leading head -12.5% VARI SPEED playback error rate = 9.9×10^{-3} or less

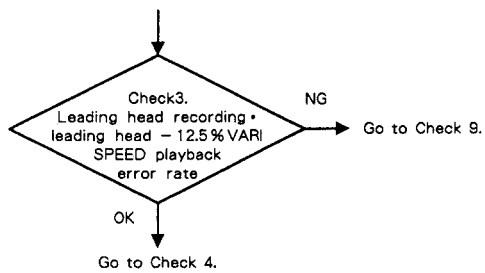

(18) Press STOP key.

2. Leading head recording • trailing head playback error rate check (excluding ± 12.5% VARI SPEED, playback check)

Check4. Leading head recording • trailing head normal speed playback error rate

(19) Press the VARI SPEED key once (to return to the normal speed condition).

(20) Hold down the MENU key and turn the SEARCH dial counterclockwise until the following message appears.

FL tube disply message : rAtE SEL A-Ab

(21) Hold down the DATA key and turn the SEARCH dial counterclockwise until the following message appears. Then, press SET.

FL tube display message : rAtE SEL d-Ab

(22) Hold down the MENU key and turn the SEARCH dial clockwise to select the following TEST MENU mode (turn the dial until the following message appears).

FL tube display message : Err rAtE

(23) Press PLAY and play the TY-30B test tape.

(24) Make sure the error rate displayed on the FL tube display 6 seconds after playback starts complies with the following specifications (the average of error rates for about 30 seconds).

Specifications :

Leading head recording • trailing head normal speed playback error rate = 5×10^{-3} or less

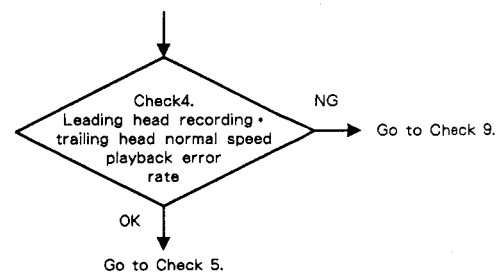

(25) Press STOP key.

3. Trailing head recording • trailing head playback error rate check (Including ± 12.5% VARI SPEED playback check)

Check5. Trailing head recording • trailing head normal speed playback error rate check

(1) After turning the POWER switch to OFF, turn the POWER switch ON (to reset)

(2) Set the "Sync rEc" mode of SET-UP MENU to "on" to select the RMW mode (trailing head recording) and press the ASSEMBLE key.

Load the TY-30B test tape (blank).

Record the signal specified for about two minutes. After recording, rewind the tape to the beginning of the recorded portion.

(3) Select the TEST MENU mode (display indication) as indicated below.

FL tube display message : rAtE SEL Auto

(4) Hold down the DATA key and turn the SEARCH dial clockwise until the following message appears. Then, press the SET key.

FL tube display message : rAtE SEL d-Ab

(5) While pressing the [MENU] key, turn the [SEARCH] dial clockwise to select the following TEST MENU (display).
FL display : Err rAtE

(6) Press the [PLAY] key and play the test tape.

(7) After playing for 6 seconds confirm that the error rate conforms to the following specifications (the average error rate for about 30 seconds).
Specifications : Trailing head recording/trailing head nomal speed playback error rate = 5×10^{-3} or less.

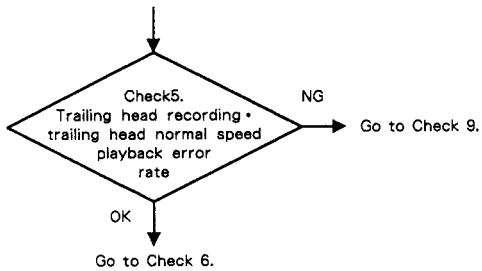

Check6. Trailing head recording • trailing head + 12.5% VARI SPEED playback error rate

(8) Press [VARI SPEED] key.

(9) Hold down the [DATA] key and turn the [SEARCH] dial clockwise until the following message appears.
FL tube display message : 12 5 %

(10) Hold down the [MENU] key and turn the [SEARCH] dial clockwise to select the following TEST MENU mode (turn the dial until the following message appears).
FL tube display message : Err rAtE

(11) Make sure the error rate displayed on the FL tube display complies with the following specifications (the average of error rates for about 10 seconds).
Specifications :
Trailing head recording • trailing head + 12.5% VARI SPEED playback error rate = 9.9 x 10^{-3} or less

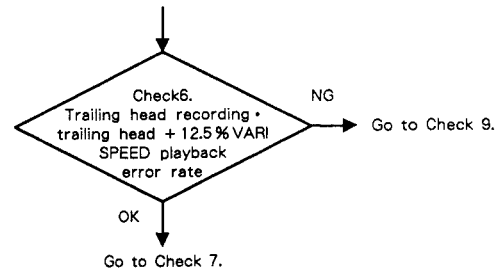

Check7. Trailing head recording • trailing head -12.5% VARI SPEED playback error rate

(12) Press [VARI SPEED] twice.

(13) Press [DATA] and [RESET] simultaneously (resets the VARI SPEED to 0%). Then, Hold down the [DATA] key and turn the [SEARCH] dial counterclockwise until the following message appears.
FL tube display message : -12 5 %

(14) Hold down the [MENU] key and turn the [SEARCH] dial slightly clockwise until the following message appears.
FL tube display message : Err rAtE

(15) Make sure the error rate displayed on the FL tube display complies with the following specifications (the average of error rates for about 10 seconds).
Specifications :
Trailing head recording • trailing head -12.5% VARI SPEED playback error rate = 9.9 x 10^{-3} or less

(16) Press the [STOP] key.

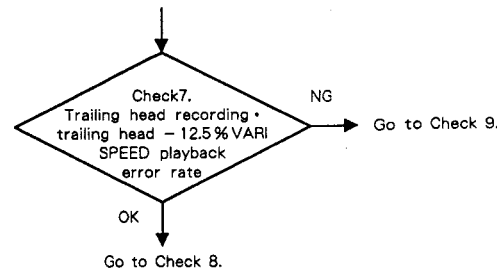

4. Trailing head recording • leading head playback error rate check
(Excluding ± 12.5 % VARI SPEED check)

Check8. Trailing head recording • leading head nomal speed playback error rate

(17) Press the [VARI SPEED] key once (to return to the normal speed condition).

(18) Hold down the [MENU] key and turn the [SEARCH] dial clockwise until the following message appears.
FL tube disply message : rAtE SEL d-Ab

(19) Hold down the [DATA] key and turn the [SEARCH] dial counterclockwise until the following message appears. Then, press [SET].
FL tube disply message : rAtE SEL A-Ab

(20) While pressing the [MENU] key, turn the [SEARCH] dial clockwise to select the following TEST MENU (display).
FL display : Err rAtE

(21) Press the [PLAY] key and play the test tape.

(22) After playing for 6 seconds confirm that the error rate conforms to the following specifications (the average error rate for about 30 seconds).
Specifications :
Trailing head recording • leading head normal speed playback error rate = 5×10^{-3} or less.

(23) Press the [STOP] key.

(24) Press the [EJECT] key and remove the TY-30B test tape.

Check9. Head cleaning and TY-7212 test tape playback error rate

In case that the error rates from the Check 1. through 8. do not comply with the specifications, perform head cleaning by using a cleaning cassette tape (See page 3-1, "3-1. Cleaning") and playback the TY-7212 error rate test tape.

If the error rate after playback the TY-7212 test tape does :

(1) comply with the specifications, perform the following ① or ② and check the error rates from the Check 1. through 8.
① Change the TY-30B test tape.
② Perform "4-6. Recording current level adjustment" again, or

(2) not comply with the specification, then, perform the following ① or ② and check the error rates from the Check 1. through 8.
① Review the instructions in 5-2-2. Standard level of LTS adjustment (SP-13 board) and perform readjustment if the level is out of standard.
② Review the instructions in 4-7-1. adjustment position of ◐RV105, ◐RV205 of EQ-H preset (RF-31 board) and perform readjustment if the level is out of standard.
Leading head playback : ◐RV105 (EQ-H)
Trailing head playback : ◐RV205 (EQ-H')

(3) not comply with the specification even the above (1), (2) are performed, then, change the drum assembly and check the error rates from the Check 1. through 8.

(4) not comply with the specification even the above (3) is performed, change the RF-31 board assmbly and check the error rates from the Check 1. through 8.

Note : (3) and (4) specified above should be performed vice versa if only the RF board assembly is replaced before the error rate check.

Precautions on checking

1) In 1. Leading head recording • leading head playback error rate check :
- The error rates in the Check 1. and 2. are O.K. and NG in the Check 3.
- The error rates in the Check 1. and 3. are O.K. and NG in the Check 2.

2) In 3. Trailing head recording • trailing head playback error rate check :
- The error rates in the Check 5. and 6. are O.K. and NG in the Check 7.
- The error rates in the Check 5. and 7. are O.K. and NG in the Check 6.

In case of above 1) and 2), execute the setting of ●RV105 (EQ-H) or ●RV205 (EQ-H') on the RF-31 board according to the range below and recheck the error rate.

●RV105/●RV205 (RF-31 board)

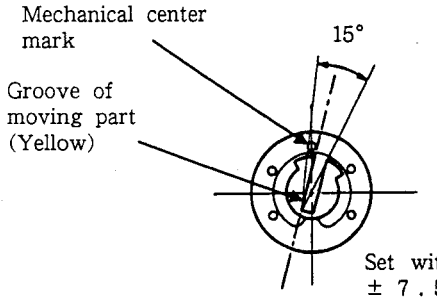

Set within the range of ± 7.5° against the installation position of 4-7-1. EQ-H preset.

1) Leading head recording • leading head playback : ●RV105 (EQ-H)
2) Trailing head recording • trailing head playback : ●RV205 (EQ-H')

4-8. Cassette Compartment Operation Check

Equipment Required

Cassette tape (any 120-minute tape sold in the market) for checking the operation

Procedure

(1) Load the cassette tape for checking the operation.

(2) Press down the following three points (①,②, and ③) to make sure the cassette tape does not project from the height reference pin on the mechanical deck while the tape is inside.

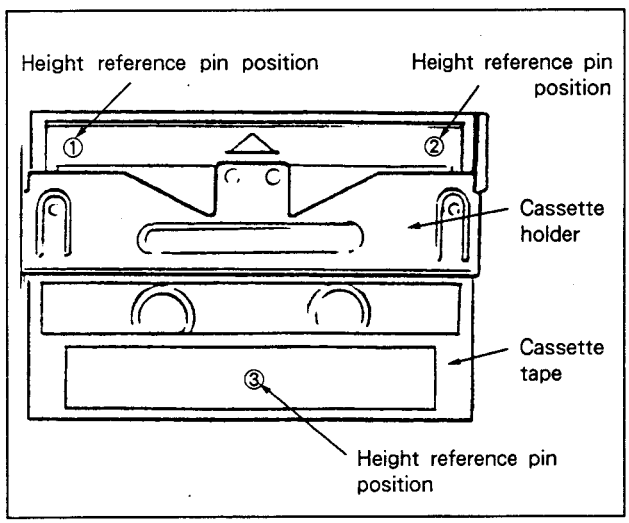

(3) Make sure the cassette holder axis is located at the loader (main) assembly guide position on the right side of the cassette compartment, as shown in the figure below, while a cassette tape is inside.

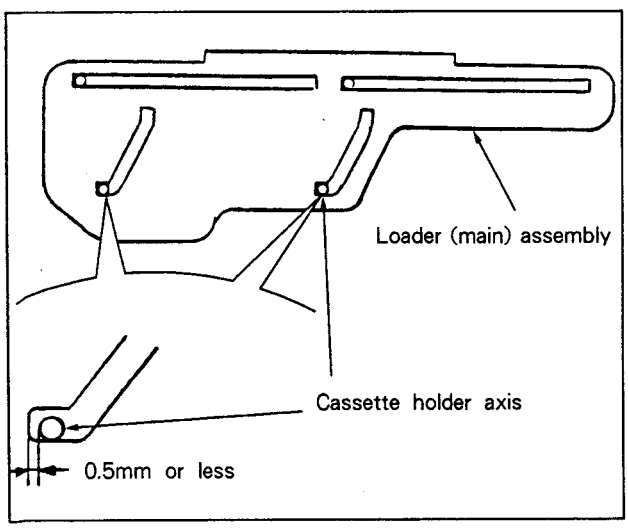

(4) Perform FF/REW operations and make sure that the beginning and end (reader tape portion) of the cassette tape stops at the position shown in the figure below.

(5) Press EJECT and make sure the cassette tape is ejected properly.

Tape end position check (FF operation)

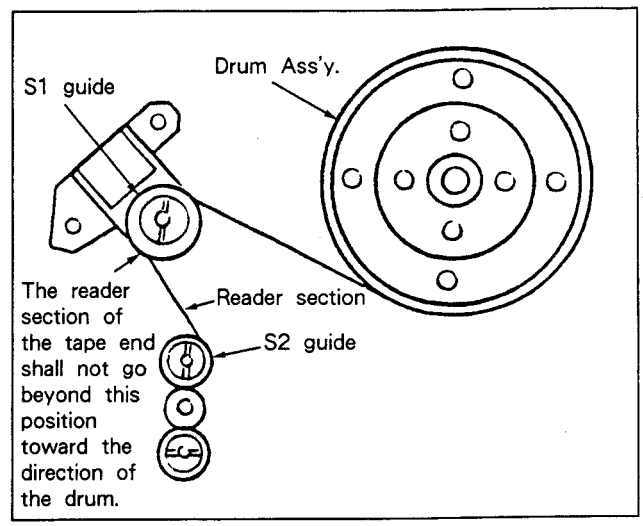

Tape start position check (REW operation)

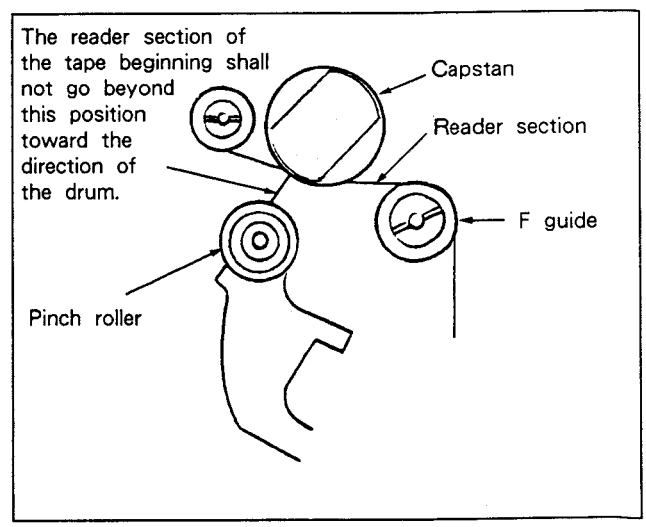

SECTION 5
Electrical Adjustments

This chapter describes the electrical adjustments required when a board is repaired or maintained. Do the adjustments in accordance with "Electrical Adjustment Items." Before making an adjustment, the items to be adjusted beforehand must have been completed. If there are multiple adjustment item problems, check the adjustment items before and after the suspect adjustment item. This chapter describes the adjustments of the internal switches and controls required to meet the unit's specifications. Regarding the adjustments of the external switches and controls and the unit operation, refer to the Operation Manual.

Electrical Adjustment Items

5-2. Signal processing adjustment (SP-13 board)

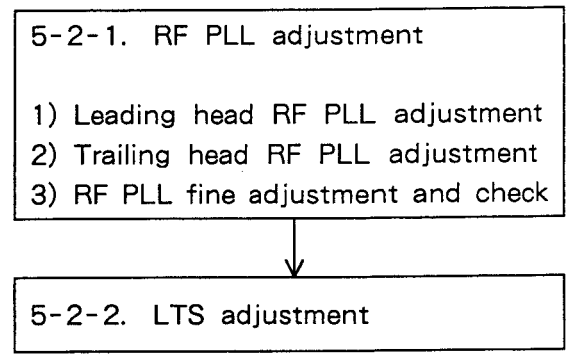

5-3. A/D and D/A adjustment (ADA-18 board)

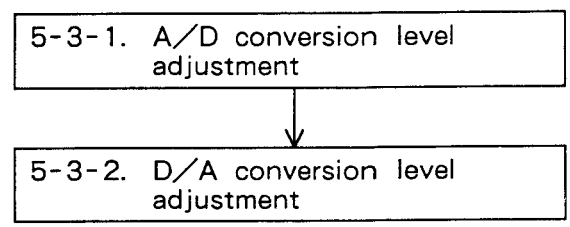

5-4. Time code adjustment (Applicable if the optional TC-58 board (DABK-7030) is installed.)

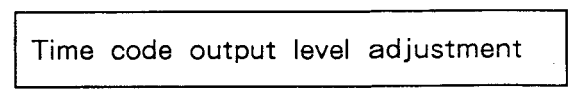

5-1. Initial Preparation

5-1-1. Equipment Required

Equipment	Minimum Specifications	Model
Oscilloscope	f : DC to 100 MHz Precision : 5 mV	—
Digital DC voltmeter	Valid digits : 4 1/2 digits or more Precision : 1 mV	—
Audio analyzer	f : 0 kHz to 30 kHz Level : +24 dBm to -70 dBm Distortion : 0.001 % S/N : 98 dB	TEKTRONIX SG505 or equivalent

5-1-2. Initial switch and control settings

Front panel

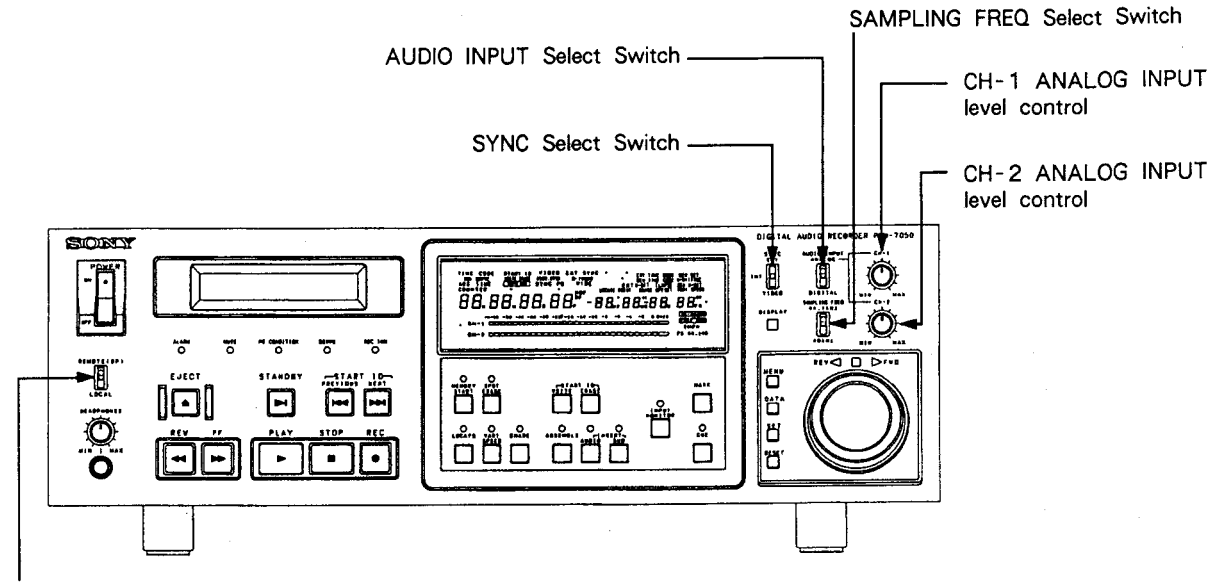

REMOTE/LOCAL Select Switch	;	LOCAL
SYNC Select Switch	;	INT
AUDIO INPUT Select Switch	;	ANALOG
SAMPLING FREQ. Select Switch	;	48kHz
CH1 ANALOG INPUT level control	;	Click center position
CH2 ANALOG INPUT level control	;	Click center position

Connector panel

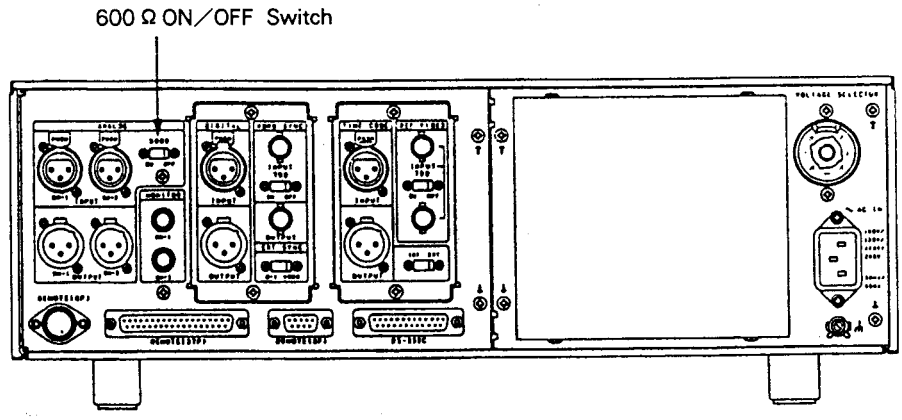

600 Ω ON/OFF Switch ; ON

ADA-18 Board

S1, IN/THRU selection switch
; IN (Factory setting.)

S101, input level setting switch
; H (Factory setting.)

S201, input level setting switch
; H (Factory setting.)

S301, input level setting switch
; H (Factory setting.)

S401, input level setting switch
; H (Factory setting.)

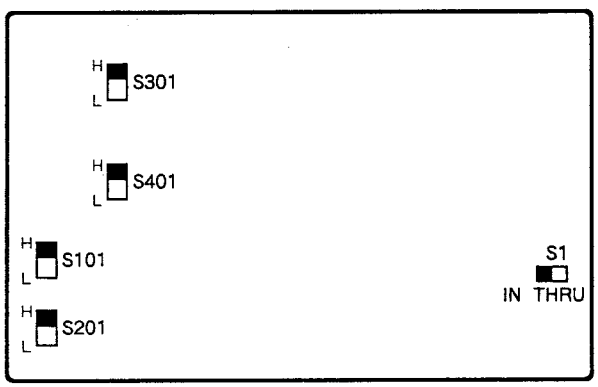

ADA-18 BOARD
COMPONENT SIDE

RM-77 Board

SW1, fader start/stop method selection switch
; SW1 (Factory setting.)

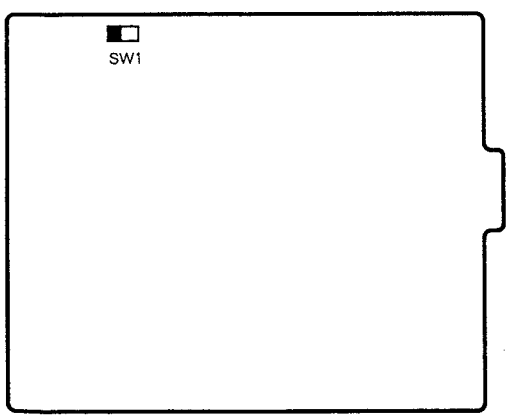

RM-77 Board
COMPONENT SIDE

SV-123 Board

SW101 (SW101-1, SW101-2)
Setting check switch ; All OFF.
(Factory setting.)

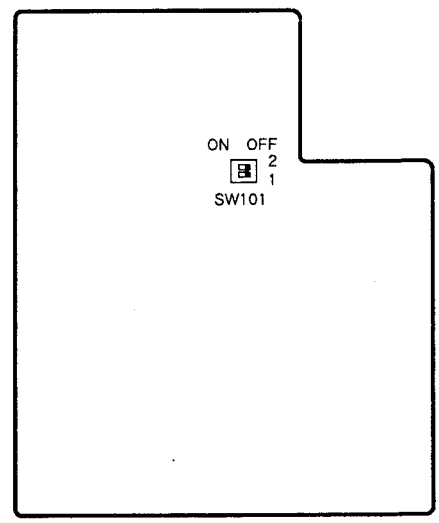

SV-123 BOARD
COMPONENT SIDE

SY-155A Board

SW1, CPU reset switch

SW3 (SW3-1 to SW3-8) unused ; All OFF

SW5, time code destination setting

SW5-1, time code destination setting switch
; OFF (J, UC)
; ON (EK)

SW5-2 to SW5-7, spare switches ; OFF

SW5-8, initialize switch ; OFF

SW6, design check switches

SW6-1 and SW6-2 ; ON

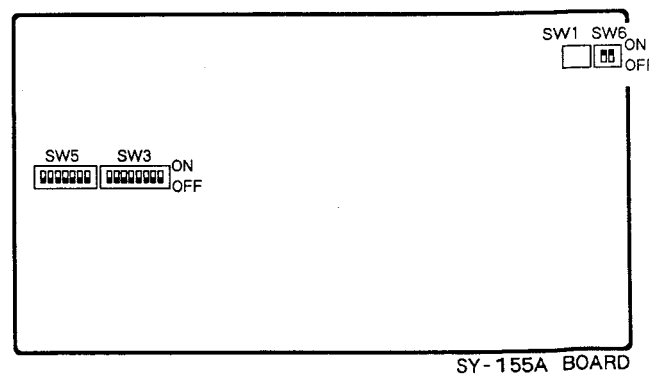

SY-155A BOARD
COMPONENT SIDE

5-2. Signal Processing Adjustment (SP-13 board)

To make the adjustment, first remove the top panel and open the ADA-18 board. (Refer to the removal procedure in 2-1.)

5-2-1. RF PLL adjustment

The RF PLL block generates the clock for extracting the playback data from the head. In correspondence to the head/RF amplifier characteristics, adjust the RF PLL block to obtain the best error rate. Do this adjustment when replacing the SP board or the head and RF assembly.

Initial preparation

1. Take out J1 and J2 from the SP-13 board. (See "Adjustment Location.") J1 and J2 are to be reinserted after the RF PLL adjustment.
2. Remove the shielded case's top cover in the CHANNEL block on the SP-13 board. (See " Adjustment Location.") (The top cover is to be re-installed after the RF PLL fine adjustment and check.)

Equipment Required

Oscilloscope

Pre-recorded music cassette tape (Fs = 48 kHz)

Connections

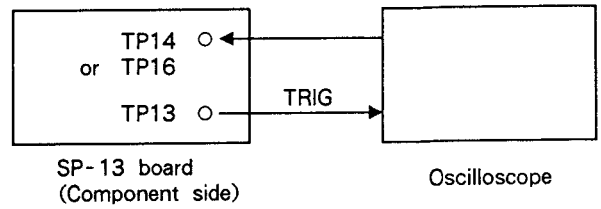

Switch and Control Settings

Front panel

REMOTE (9P) /LOCAL selection switch ; LOCAL

SYNC EXT/INT/VIDEO selection switch ; INT

SAMPLING FREQ 44.1 kHz / 48 kHz

Selection switch ; 48 kHz

POWER switch ; ON

Adjustment Location

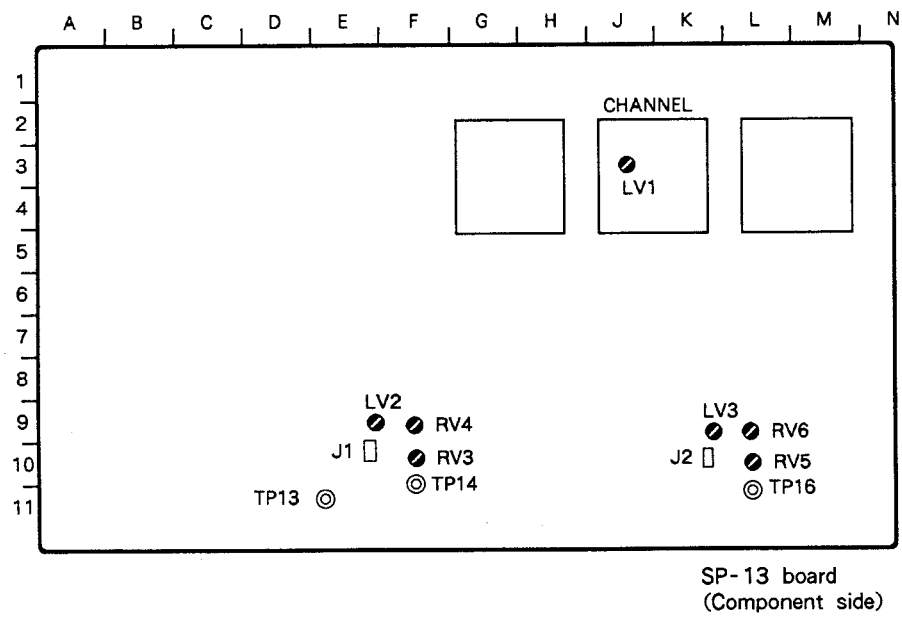

SP-13 board
(Component side)

1) Leading head RF PLL Adjustment

Step	Adjustment Condition	Specification	Adjustment Location (SP-13 board)
1	Insert the pre-recorded music cassette tape (Fs = 48kHz) and playback the tape. (PLAY mode)	TP14 (F, 10) output waveform OK 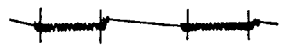 NG 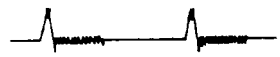 NG 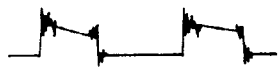 NG TRIG : TP13 (E, 11)	◐RV4 (F, 9) If the waveform is no good, turn ◐RV3 slightly and then readjust ◐RV4.
2	Same as step 1.	TP14 (F, 10) output waveform 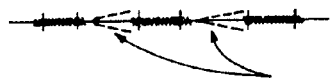 This portion is to be flat. TRIG : TP13 (E, 11)	◐RV3 (F, 10)
3	Same as step 2.	TP14 (F, 10) output waveform 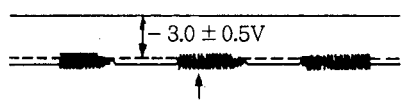 Amplitude's center voltage where is RF. TRIG : TP13 (E, 11)	◐LV2 (E, 9) Note : After being turned clockwise all the way, adjust ◐LV2 so that it can be loosened within one full turn. If it is too tight, the core may be damaged. And if it is too loose, the core may core may come off.
4	Insert the pre-recorded music cassette tape (Fs = 48kHz) and set CUE FWD (× 16 speed).	TP14 (F, 10) output waveform This portion is to be flat. TRIG : TP13 (E, 11)	◐RV4 (F, 9)
5	Insert the pre-recorded music cassette tape (Fs = 48kHz) and set CUE REV (× 16 speed).	TP14 (F, 10) output waveform This portion is to be flat. TRIG : TP13 (E, 11)	◐RV4 (F, 9)
6	Insert the pre-recorded music cassette tape (Fs = 48kHz) and set CUE FWD and CUE REV (× 3 speed). Repeatedly two or three times.	TP14 (F, 10) output waveform This portion is to be flat while the tape is running. TRIG : TP13 (E, 11)	

2) Trailing head RF PLL Adjustment

Step	Adjustment Condition	Specification	Adjustment Location (SP-13 board)
1	Insert the pre-recorded music cassette tape (Fs = 48kHz) and playback the tape. (PLAY mode)	TP16 (L, 10) output waveform OK 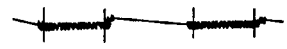 NG 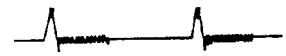 NG 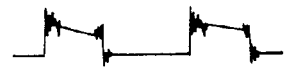 NG TRIG : TP13 (E, 10)	◐RV6 (L, 9) If the waveform is no good, turn ◐RV5 slightly and then re-adjust ◐RV6.
2	Same as step 1.	TP16 (L, 10) output waveform 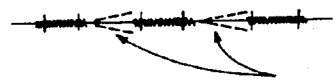 This portion is to be flat. TRIG : TP13 (E, 10)	◐RV5 (L, 10)
3	Same as step 2.	TP16 (L, 10) output waveform 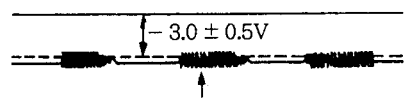 Amplitude's center voltage where is RF. TRIG : TP13 (E, 10)	◐LV3 (L, 9) Note : After being turned clockwise all the way, adjust ◐LV3 so that it can be loosened within one full turn. If it is too tight, the core may be damaged. And if it is too loose, the core may core may come off.
4	Insert the pre-recorded music cassette tape (Fs = 48kHz) and set CUE FWD (× 16 speed).	TP16 (L, 10) output waveform This portion is to be flat. TRIG : TP13 (E, 10)	◐RV6 (L, 9)
5	Insert the pre-recorded music cassette tape (Fs = 48kHz) and set CUE REV (× 16 speed).	TP16 (L, 10) output waveform This portion is to be flat. TRIG : TP13 (E, 10)	◐RV6 (L, 9)
6	Insert the pre-recorded music cassette tape (Fs = 48kHz) and set CUE FWD and CUE REV (× 3 speed). Repeatedly two or three times.	TP16 (L, 10) output waveform This portion is to be flat while tape is running. TRIG : TP13 (E, 10)	

3) RF PLL Fine Adjustment and Check

Before making the adjustment, turn off the POWER switch and re-insert J1 and J2 into the SP-13 board. Then turn on the POWER switch and make the adjustment.

After completing the adjustment, turn off the POWER switch and re-install the top cover on the CHANNEL block's shielded case on the SP-13 board.

Step	Adjustment Condition	Specification	Adjustment Location (SP-13 board)
1	Insert the pre-recorded music cassette tape (Fs = 48kHz) and playback the tape. (PLAY mode)	TP16 (L, 10) output waveform 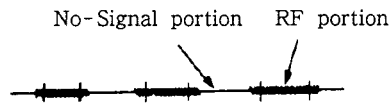 TRIG : TP13 (E, 10)	◐LV1 (J, 2) Adjust ◐LV1 so that the center of the RF portion and no signal portion becomes flat. If the center cannot be flattened, redo the adjustments from steps 3 to 6 for the back ward RF PLL adjustment described in 2). Before making the re-adjustment, shift the center voltage within the adjustment standard range stated in step 3 of the back ward RF PLL adjustment described in 2). Note : After being turned clockwise all the way, adjust ◐LV1 so that it can be loosened within one full turn.If it is too tight, the core may be damaged.And if it is too loose, the core may come off.
2	Same as step 1.	TP14 (E, 10) output waveform 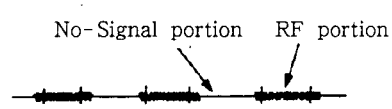 TRIG : TP13 (E, 10)	◐LV2 (E, 9) Adjust ◐LV2 so that the center of the RF portion and no signal portion becomes flat. If the center cannot be flattened, redo the adjustments from steps 3 to 6 for the forward RF PLL adjustment described in 2).Before making the re-adjustment, shift the center voltage within the adjustment standard range stated in step 3 of the forward RF PLL adjustment described in 2). Note : After being turned clockwise all the way, adjust ◐LV2 so that it can be loosened within one full turn.If it is too tight, the core may be damaged.And if it is too loose, the core may come off.
3	Insert the pre-recorded music cassette tape (Fs = 48kHz) and set the FF and REW modes.	TP14 (F, 10) and TP16 (L, 10) output waveform OK NG 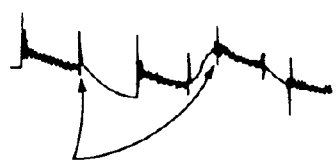 As the voltage is high, the waveform swings to plus. TRIG : TP13 (E, 10)	

5-2-2. LTS Adjustment

LTS ; Longitudinal Tape Speed

During vari-pitch playback, adjust the cantrol voltage to optimize the RF equalizer's characteristices. Do this adjustment after replacing the SP board or the head and RF assembly.

Equipment Required

Digital DC voltmeter

Connections

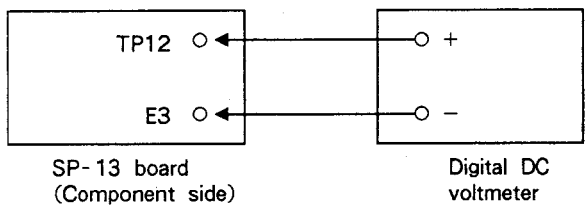

Switch and control settings

Front panel

POWER switch ; ON

REMOTE (9P) / LOCAL switch ; LOCAL

SYNC EXT/INT/VIDEO selection switch ; INT

SAMPLING FREQ 44.1 kHz / 48 kHz switch ; 48 kHz

Adjustment Location

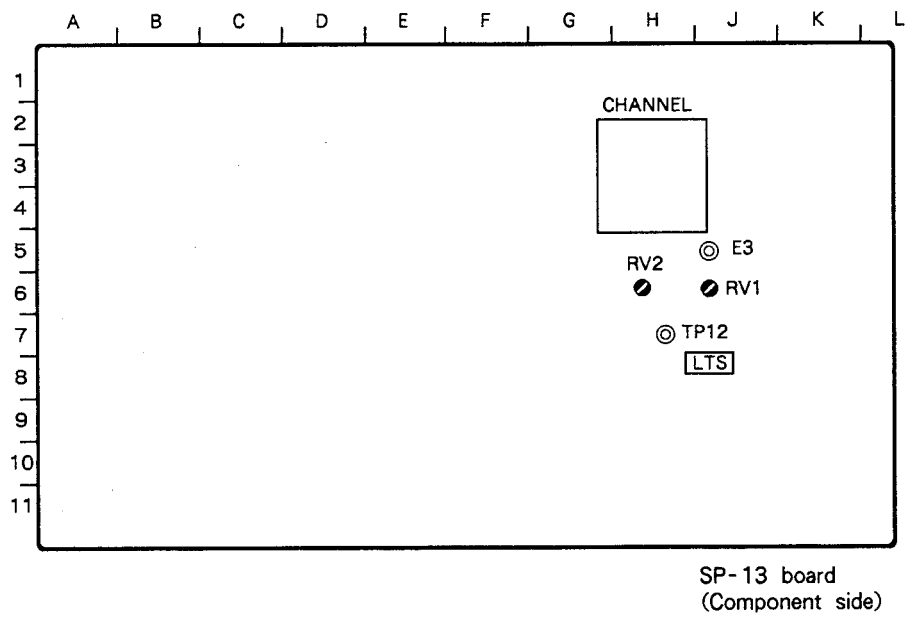

Step	Adjustment Condition	Specification	Adjustment Location (SP-13 board)
1	• A cassette tape has not been inserted.	DC voltage between TP12 (K,6) and E3 (K, 4) 0 ± 0.02 V	◐RV1 (K, 5)
2	• Vari-speed + 12.5 % A cassette tape has not been inserted.	DC voltage between TP12 (K,6) and E3 (K, 4) + 0.27 ± 0.01 V	◐RV2 (J, 2)
3	• Vari-speed + 12.5 % A cassette tape has not been inserted.	DC voltage between TP12 (K,6) and E3 (K, 4) -0.27 ± 0.05 V	

5-3. A/D and D/A Adjustment (ADA-18 board)

Remove the top panel before making the adjustment. (Refer to the removal procedure in 2-1.)

Equipment Required
Audio analyzer
Oscilloscope

Switch, control setting
Front panel
POWER switch ; ON
SAMPLING FREQ 44.1kHz/48kHz switch ; 48kHz
AUDIO INPUT ANALOG/DIGITAL selection switch ; ANALOG
ANALOG CH1 input level control ; Click center position
ANALOG CH2 input level control ; Click center position
INPUT MONITOR key ; ON (LED lights)
Connector panel
Analog audio signal I/O terminal
600 ohm ON/OFF switch ; ON
ADA-18 board
S101, S201, S301, and S401 ; H

5-3-1. A/D conversion level adjustment

Do electrical adjustments on the A/D block on the ADA-18 board. After replacing the ADA-18 board, do this adjustment first.

Equipment Required
Audio analyzer
(equipment measuring audio characteristics)

Connections

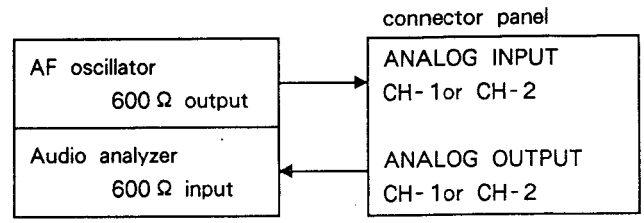

Adjustment Location

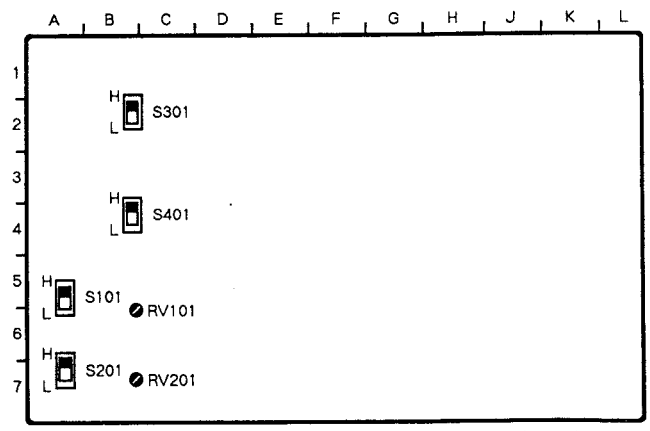

ADA-18 board
(Component side)

Before making the adjustment, set the FL tube display on the front panel as follows. Regarding the procedure, refer to the Operation Manual.

FL tube display

Au-rEF (input signal level's digital display mode)

EMPH OFF (emphasis OFF mode)

Step	Adjustment Condition	Specification	Adjustment Location (ADA-18 board)
1	• Input a 1kHz, +4dBs signal into the ANALOG IN CH-1 connector.	Value of the Au-rEF CH1 (left side) on the FL tube display. -20.0 dB	◐RV101 (B, 6)
2	• Input a 1kHz, +4dBs signal into the ANALOG IN CH-2 connector.	Value of the Au-rEF CH2 (right side) on the FL tube display. -20.0 dB	◐RV201 (B, 7)
3	• Same as step 2. • Turn the POWER switch OFF/ON once, then set the INPUT MONITOR mode.	Only the -∞ dot should be lit on the CH-1 level meter. CH-2 Au-rEF value. -20.0 dB	

5-3-2. Center potential adjustment

This adjustment applies to the ADA-18 board on the followintg board numbers which end in -14 and higher.

ADA-18 board

Board No : 1-637-267-14 and higher

Specification method :

The center potential should always be adjusted as figure below when ⊘RV102, ⊘RV202 are replaced.

Specification :

Set ⊘RV102 (E,7) and ⊘RV202 (E,7) to the center (as the adjustment when shipped).

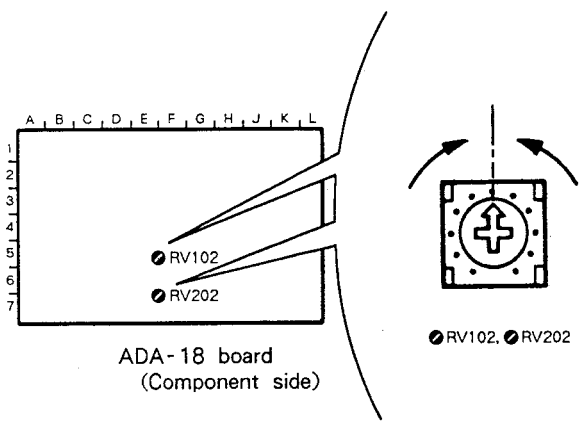

ADA-18 board
(Component side)

5-3-3. D/A conversion level adjustment

Do electrical adjustments on the D/A block on the ADA-18 board. After replacing the ADA-18 board, do this adjustment after completing "A/D conversion level adjustment."

Equipment Required

Audio characteristic measuring equipment
(AF oscillator/audio analyzer) Oscilloscope

Connections

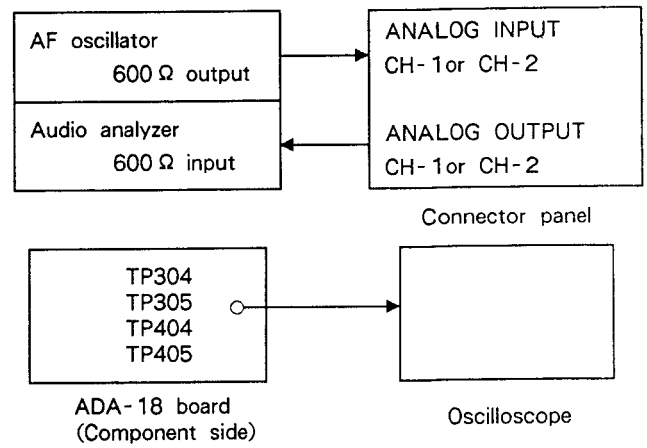

Adjustment Location

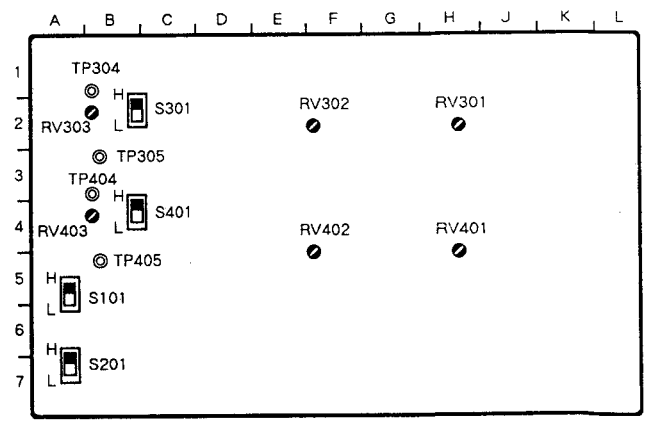

ADA-18 board
(Component side)

1. This adjustment applies to the ADA-18 board on the following board numbers which end in -11, -12, -13.

   ADA-18 board

   Board No : 1-637-267-11

   1-637-267-12

   1-637-267-13

Step	Adjustment Condition	Specification	Adjustment Location (ADA-18 board)
1	• Input a 1kHz, +4dBs signal into the ANALOG IN CH-1 connector.	ANALOG OUTPUT CH1 output level +4 dBs ± 0.1 dB	◐RV302 (F, 2)
2	• Same as step 1.	Adjust the ANALOG OUTPUT CH1 distortion to the minimum. The distortion should be 0.05 % or less.	◐RV301 (H, 2)
3	• Same as step 1.	TP304 (A, 1) to TP305 (B, 3) 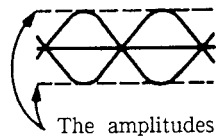 The amplitudes are to be equal.	◐RV303 (A, 2)
4	• Input a 1kHz, +4dBs signal into the ANALOG IN CH-2 connector.	ANALOG OUTPUT CH2 output level +4 dBs ± 0.1 dB	◐RV402 (E, 4)
5	• Same as step 4.	Adjust the ANALOG OUTPUT CH2 distortion to the minimum. The distortion should be 0.05 % or less.	◐RV401 (H, 4)
6	• Same as step 4.	TP404 (A, 3) to TP405 (B, 4) 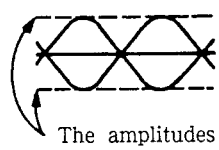 The amplitudes are to be equal.	◐RV403 (A, 4)

2. This adjustment applies to the ADA-18 board on the following board numbers which end in -14 and higher.
   ADA-18 board
   Board No : 1-637-267-14 and higher

Step	Adjustment Condition	Specification	Adjustment Location (ADA-18 board)
1	• Input a 1kHz, +4dBs signal into the ANALOG IN CH-1 connector.	ANALOG OUTPUT CH1 output level +4dBs ± 0.1dB	◐RV302 (F, 2)
2	• Same as step 1.	TP304 (A, 1) ~TP305 (B, 3) 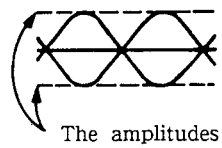 The amplitudes are to be equal.	◐RV303 (A, 2)
3	• Input a 1kHz, +4dBs signal into the ANALOG IN CH-2 connector.	ANALOG OUTPUT CH2 output level +4dBs ± 0.1dB	◐RV402 (E, 4)
4	• Same as step 3.	TP404 (A, 3) ~TP405 (B, 4) 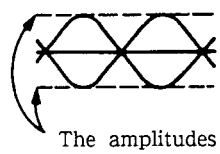 The amplitudes are to be equal.	◐RV403 (A, 4)

Connection (step 5, 6)
Connect the oscilloscope to the monitor output of the audio analyzer.

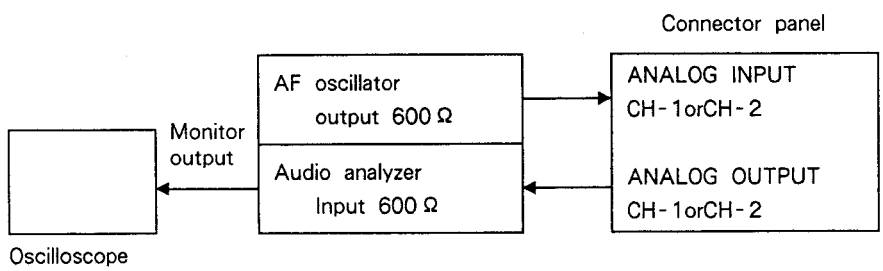

Note : Adjustment for ◐RV301, ◐RV401 have to be done after heating up the body with the top board installed, then remove the top board before adjustment.

Step	Adjustment Condition	Specification	Adjustment Location (ADA-18 board)
5	• Input a 1kHz, -60dBs signal into the ANALOG IN CH-1 connector.	Satisfy ①, ② below both at the same time. ①Output level of CH1 : Between -61.0 ~ -61.5dBs ②Osciloscope wave : sin wave 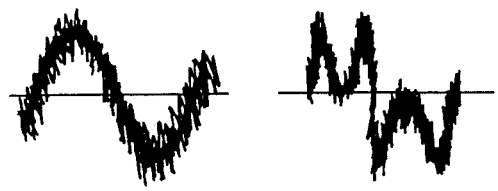 OK (sin wave) NG	◐RV301 (H, 2)
6	• Input a 1kHz, -60dBs signal into the ANALOG IN CH-2 connector.	Satisfy ①, ② below both at the same time. ①Output level of CH2 : Between -61.0 ~ -61.5dBs ②Osciloscope wave : sin wave 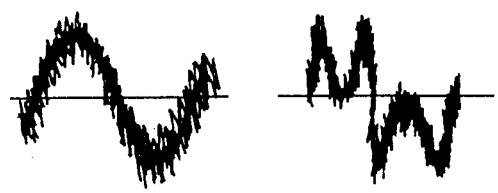 OK (sin wave) NG	◐RV401 (H, 4)

5-4. Time Code Adjustment (With the optional TC-58 board (DABK-7030) installed.)

Do this adjustment if the DABK-7030 (TIME CODE OPTION) is installed on the PCM-7030/PCM-7050 or if the time code output level is to be changed.

Initial preparation

1. As shown in the figure below, lay the unit with the POWER switch on the front panel facing down.
2. Remove the bottom panel and open the TC-58 board to expose the component side. (See the figure below.) Refer to the removal procedure in 2-1.

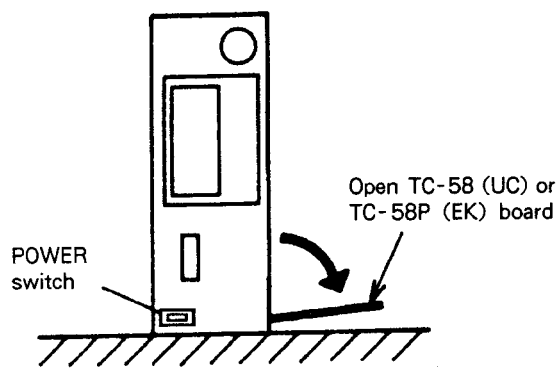

Adjustment Location

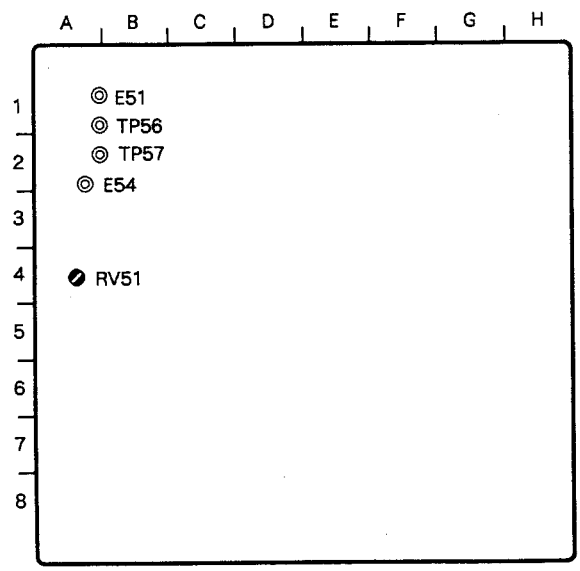

TC-58 (UC) or
TC-58P (EK) board
(Component side)

Equipment Required

Oscilloscope

Cassette tape recorded with a time code

Equipment connected to the time code output

Connections

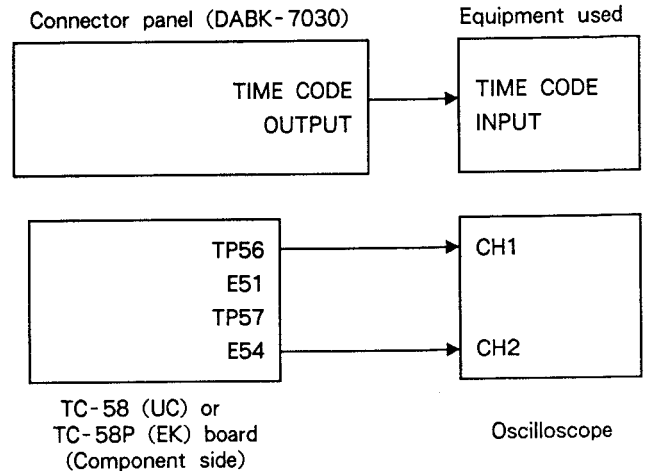

Switch and control settings

Same as the initial settings.

Adjustment Condition	Specification	Adjustment Location (TC-58 board)
Insert the time code-recorded cassette tape and playback the tape.(PLAY mode) • Connect the oscilloscope's CH1 and GND to TP56 (A, 1) and E51 (A, 1) respectively. • Connect the oscilloscope's CH2 and GND to TP57 (A, 1) and E54 (A, 2) respectively.	Oscilloscope CH-1 Oscilloscope CH-2 ; INVERT } Both channels : ADD mode 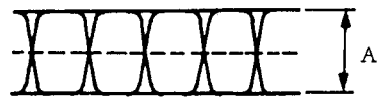 $A = 2.4\ V_{P-P}$ • If the time code output level is to be changed, adjust ⊘RV51 so that voltage A above becomes the desired voltage.	⊘RV51 (A, 4)

SECTION A
BLOCK DIAGRAMS

OVERALL(without option)

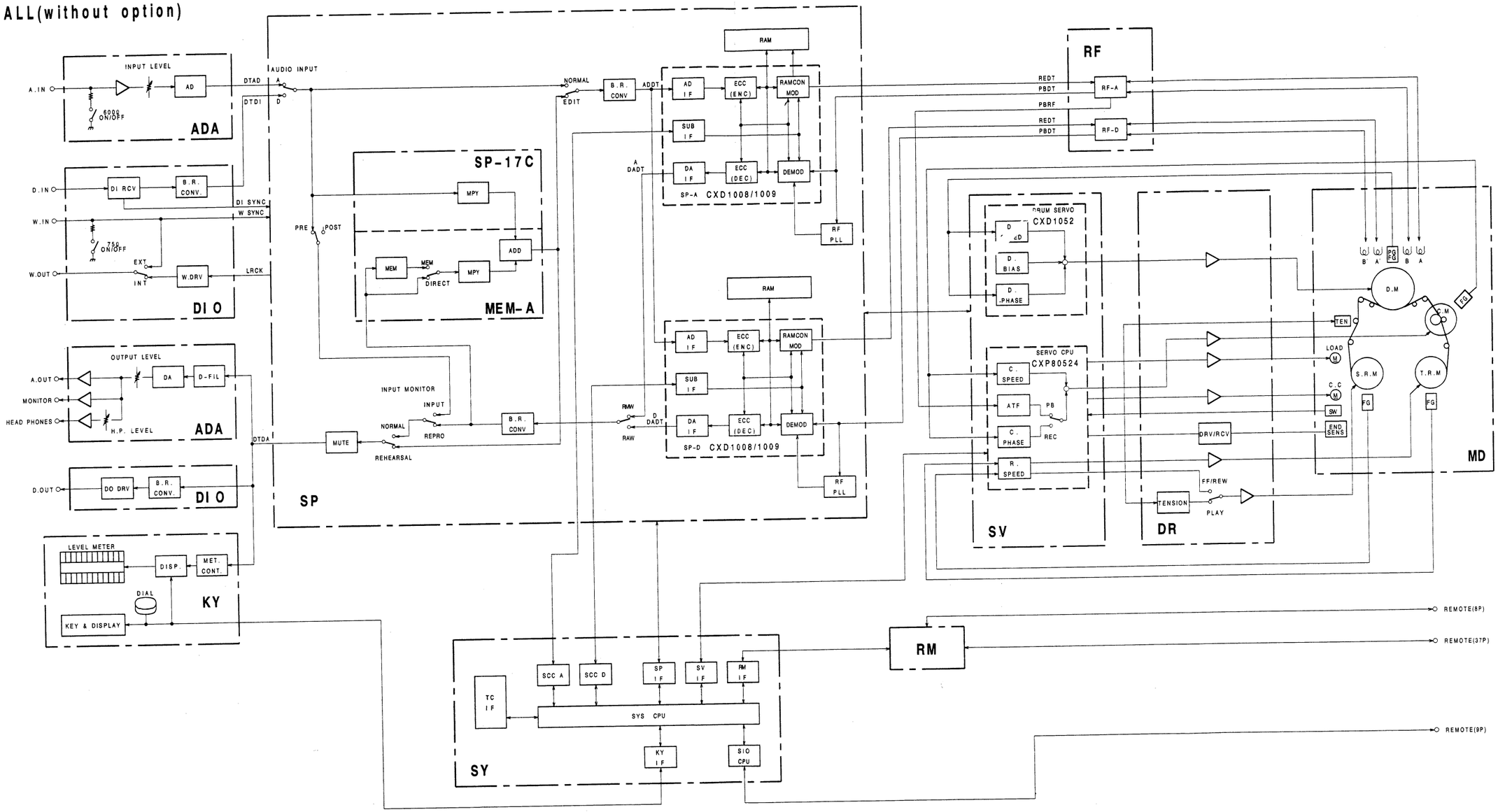

OVERALL
(without option)
PCM-7050

OVERALL(with all the options)

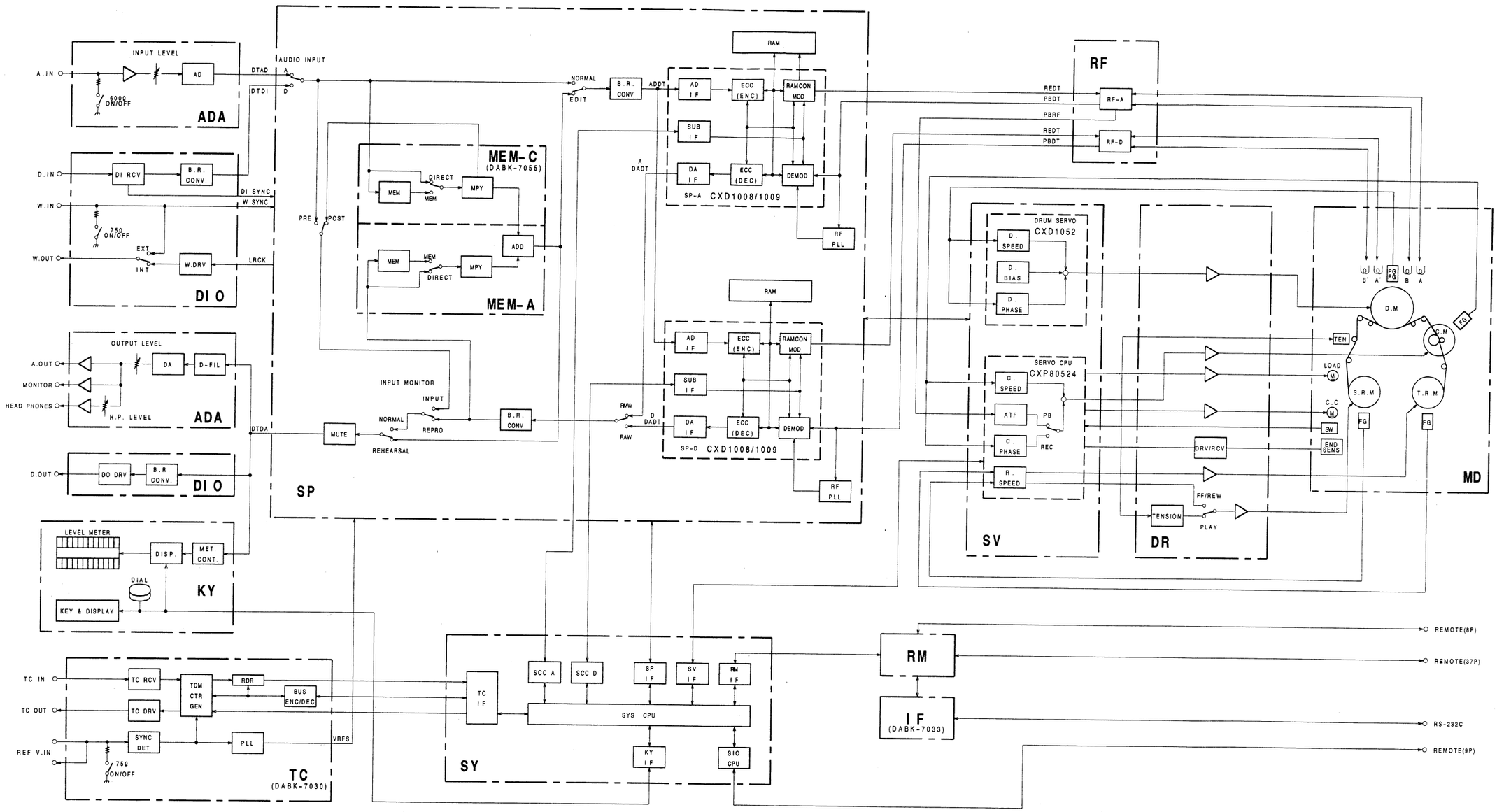

OVERALL

(with all the options)
PCM-7050

MECHANISM DECK BLOCK DIAGRAM

MECHANISM DECK

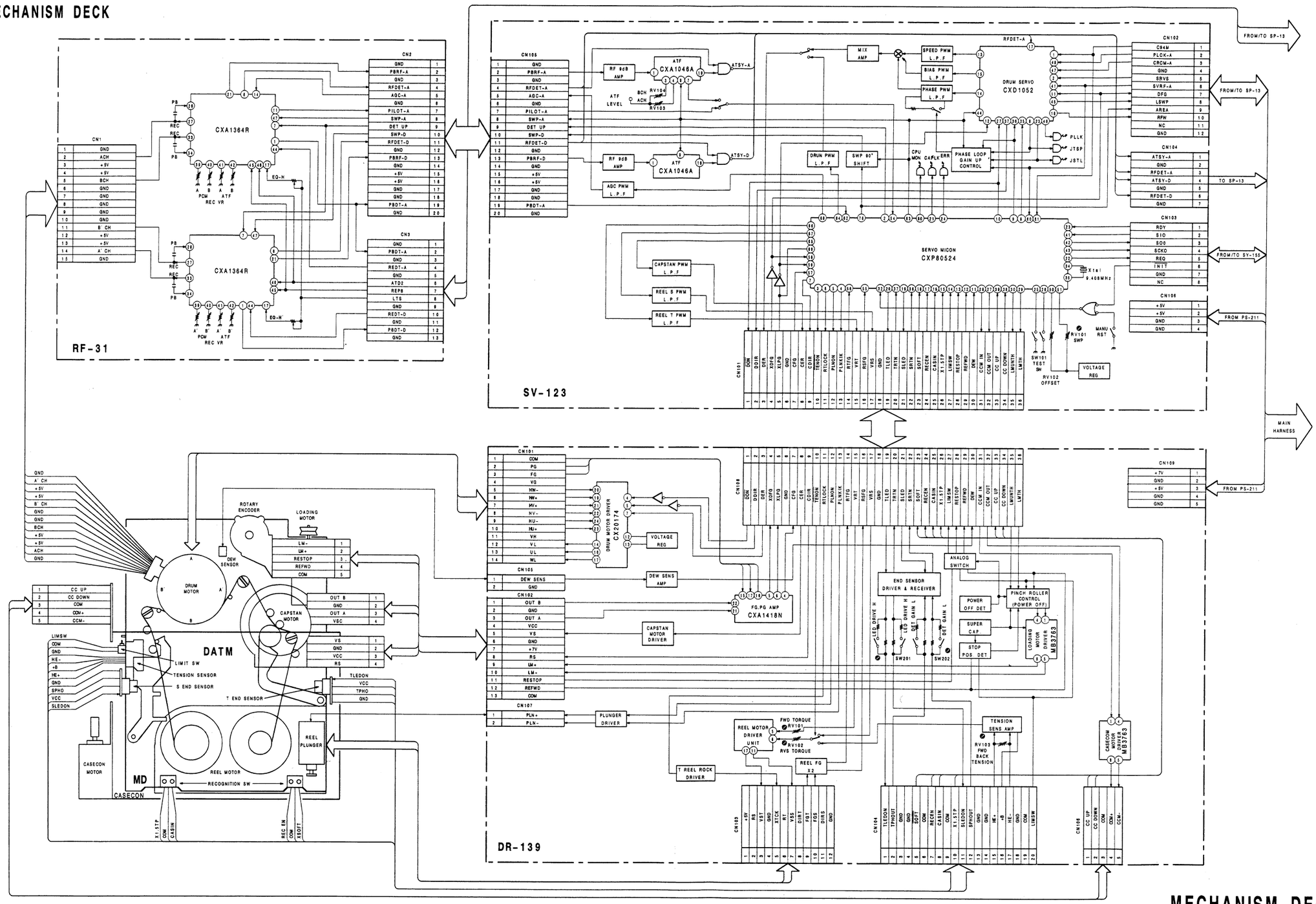

MECHANISM DECK

PCM-7050

5-A-6

ADA-18 BOARD

REC Audio,A/D Converter
PB Audio,D/A Converter

Serial No. UC 20001 to 20035
EK 50001 to 50115

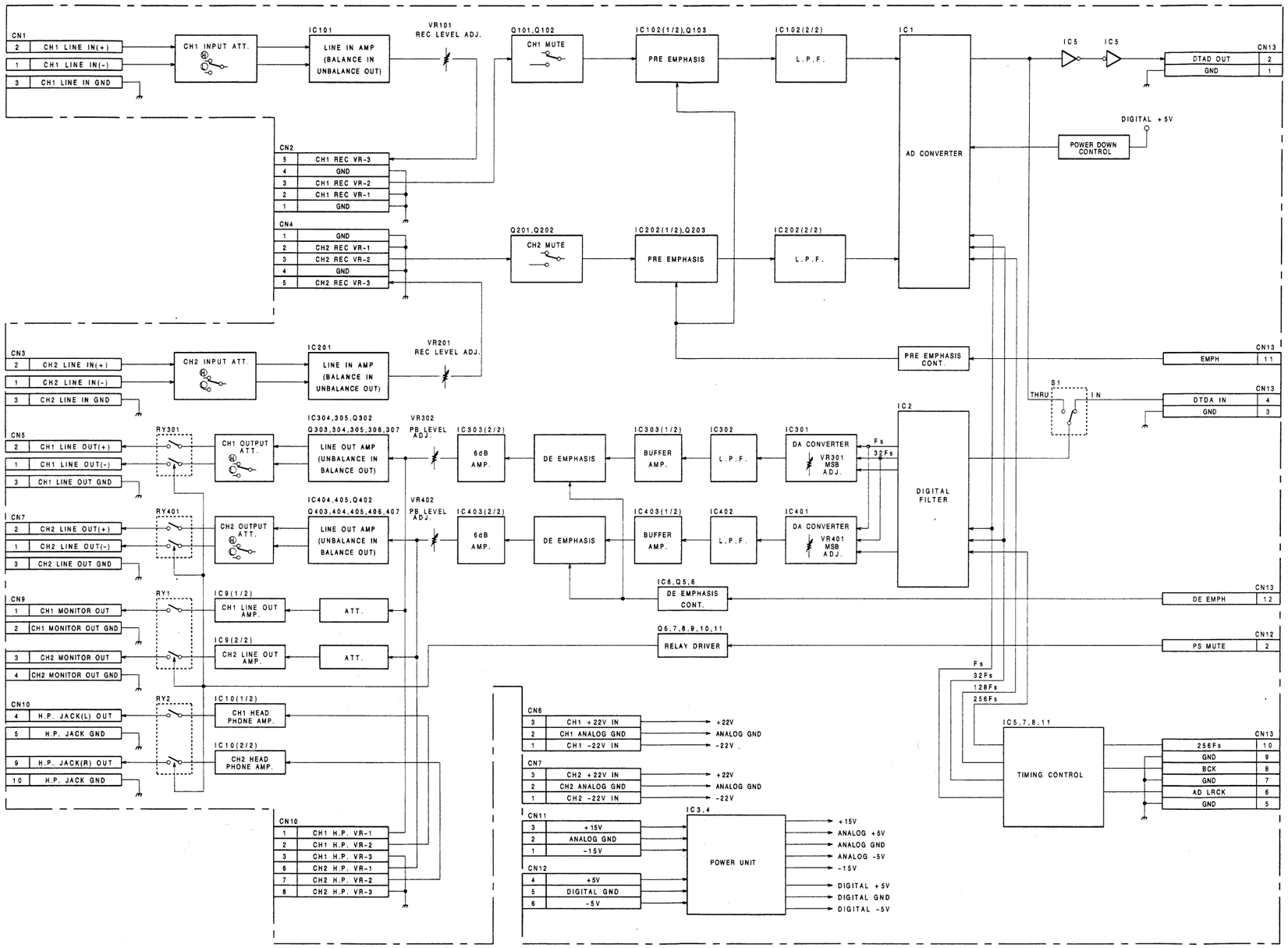

ADA-18
PCM-7050

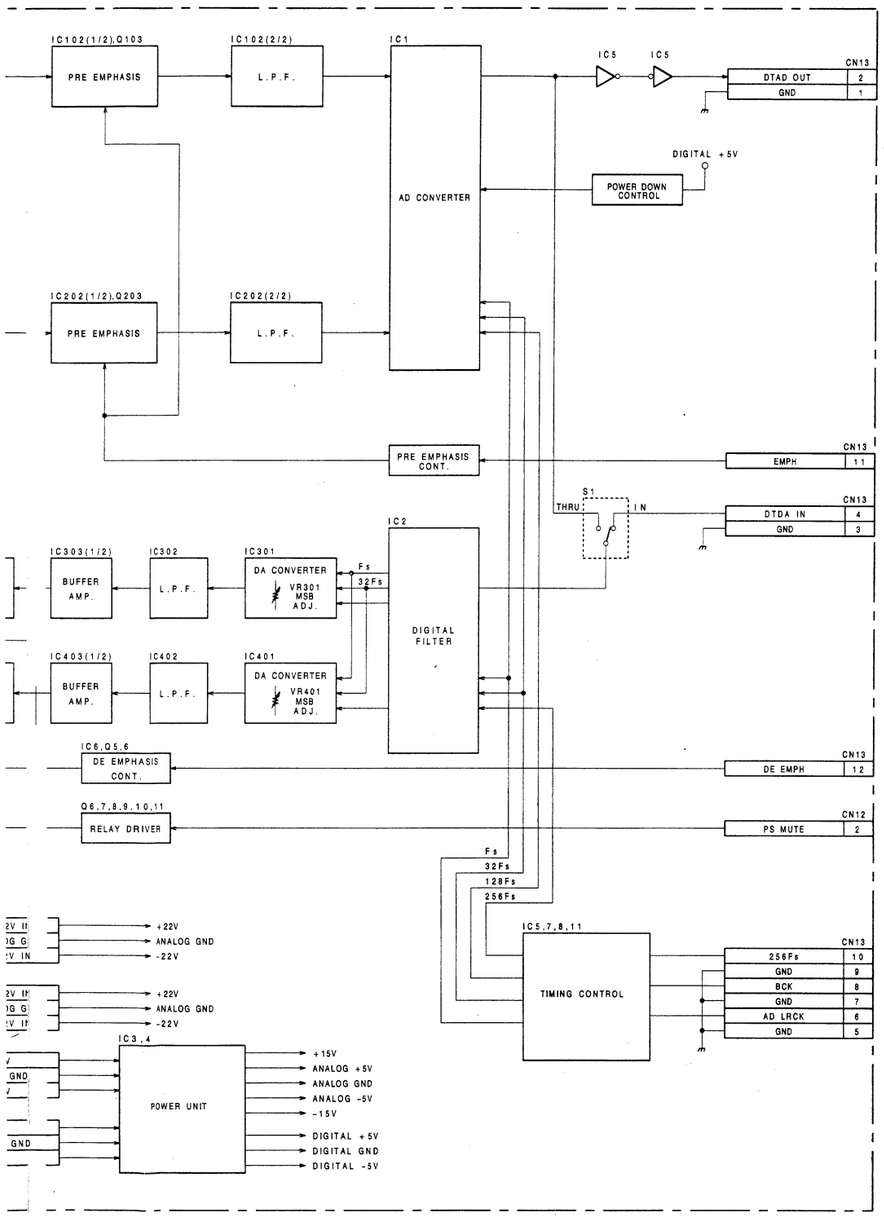

ADA-18
PCM-7050

ADA-18 Board

The ADA-18 board consists of the A/D converter, D/A converter of two channels, and timing control block.
The A/D converter converts the analog signal to the digital signal of two channels and output the digital signal to the SP-13 board.
The D/A converter converts the digital signal of two channels transmitted from the SP-13 board to the analog signal.

1. A/D converter

A/D converter consists of -20dBs/+4dBs input level change circuit, LINE IN AMP (IC101/IC201), MUTE (Q101, 102/Q201, 202), PRE-EMPHASIS (IC102, Q103/IC102, Q203), and L.P.F.(IC102, IC202). The circuit offset (OFFSET CALIBLATION) is canceled automatically when the power turns on. The input level can be set to -20dBs or +4dBs by INPUT ATT SWITCH.(S101/S201)

2. D/A converter

D/A converter consists of the digital filter (IC2), D/A converter (IC301,IC401), L.P.F.(IC301/IC402), DE-EMPHASIS, LINE OUT AMP (IC304, 305, Q302-307 / IC404, 405, Q402-407), -20dBs/+4dBs output level change circuit, MONITOR OUT AMP (IC9) and HEADPHONE AMP (IC10). It can make the cut off characteristic of the L.P.F. moderate to make the sampling frequency eight times by using the digital filter. This improves a linear phase characteristic in the audible frequency range. The output level can be set to -20dBs or +4dBs by OUTPUT ATT SWITCH (S301, S401).

3. Timing control division (IC5, 7, 8, 11)

It regenerates the each timing signal (AD LRCK, BCK, 256Fs) transmitted from the SP-13 board into timing signals (Fs, 32Fs, 128Fs, 256Fs) which are required for A/D and D/A conversion.

(A/D,D/A CONVERTER)
ADA-18 BLOCK DIAGRAM

ADA-18 BOARD

REC Audio,A/D Converter
PB Audio,D/A Converter

Serial No. UC 20036 and higher
EK 50116 and higher

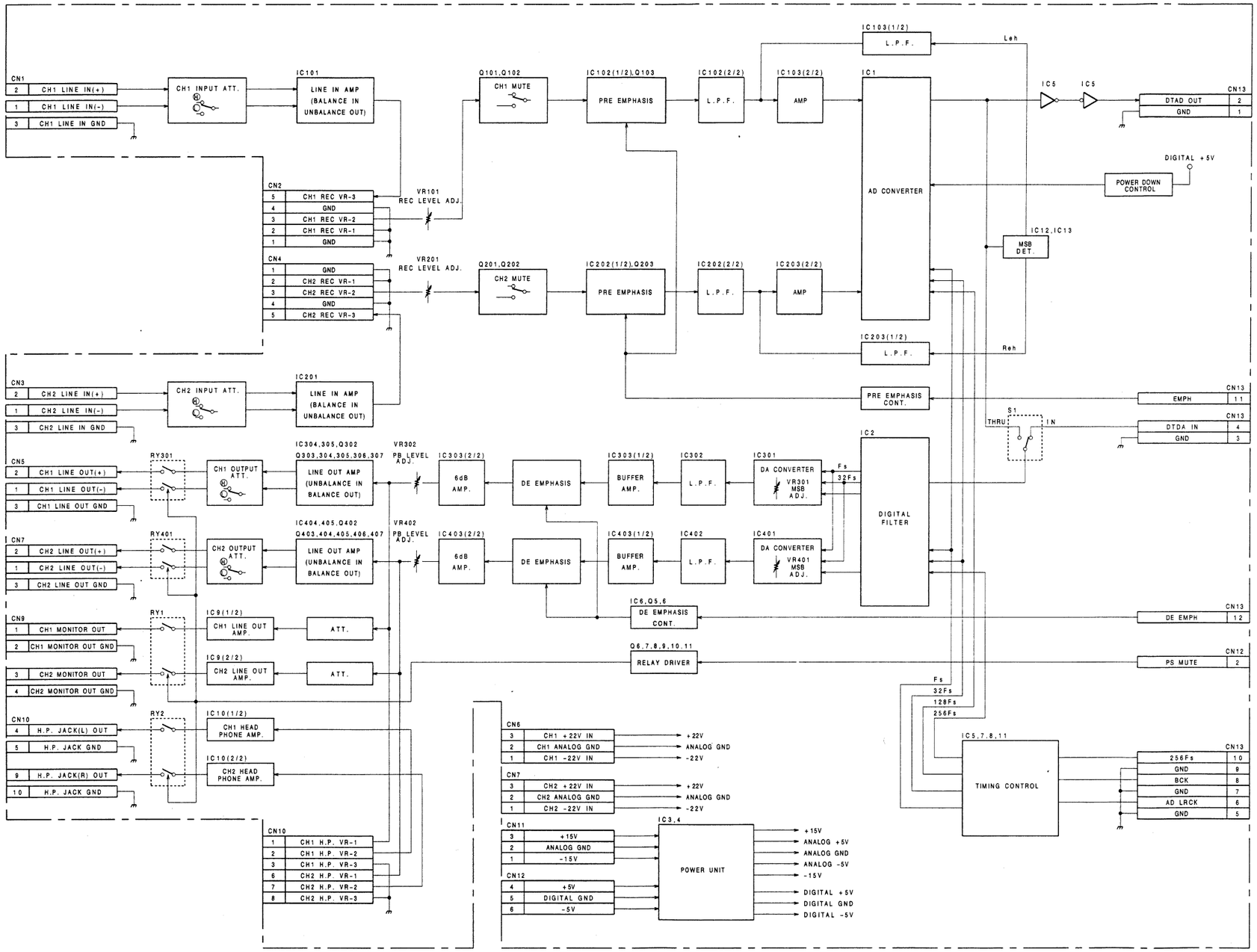

ADA-18
PCM-7050

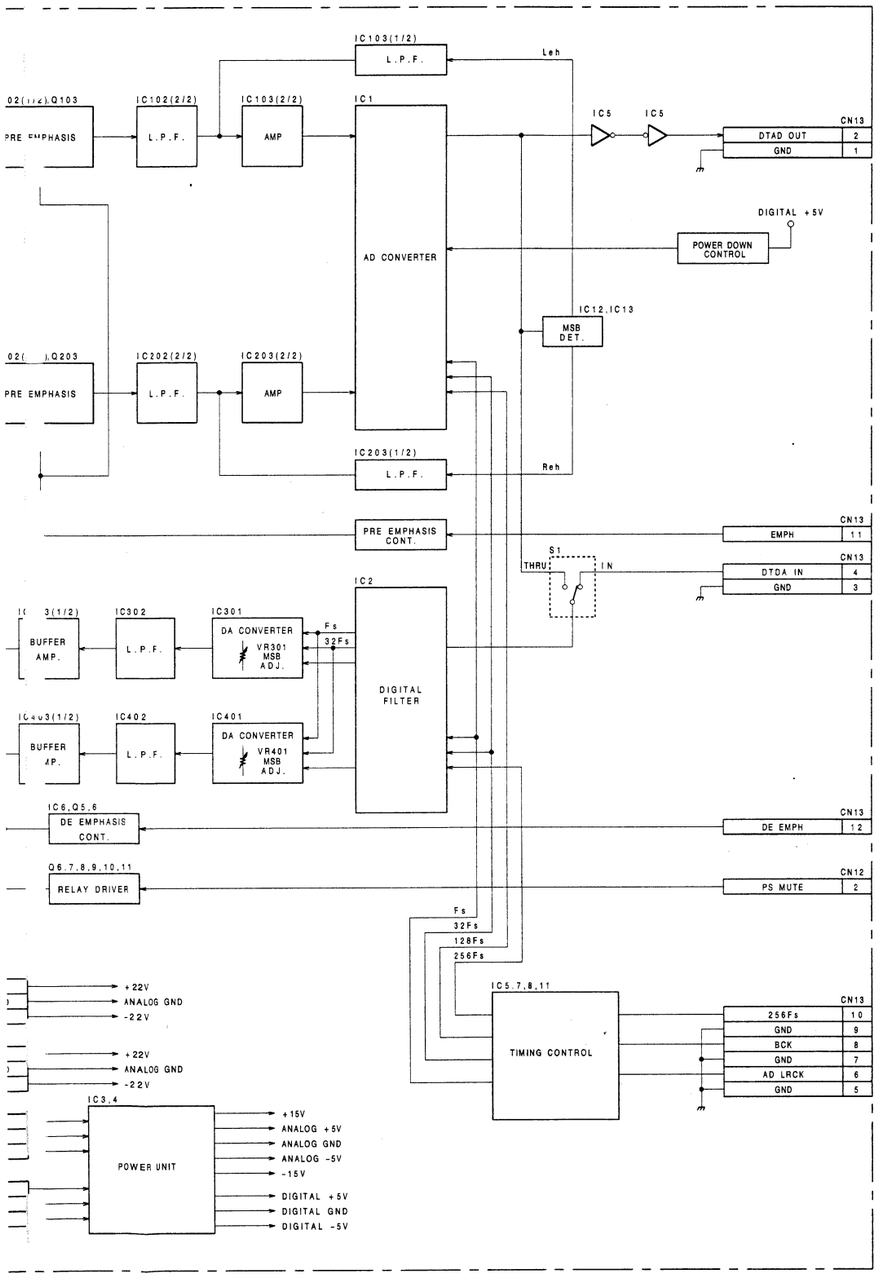

ADA-18
PCM-7050

ADA-18 Board

The ADA-18 board consists of the A/D converter, D/A converter of two channels, and timing control block.
The A/D converter converts the analog signal to the digital signal of two channels and output the digital signal to the SP-13 board.
The D/A converter converts the digital signal of two channels transmitted from the SP-13 board to the analog signal.

1. A/D converter

A/D converter consists of -20dBs/+4dBs input level change circuit, LINE IN AMP (IC101/IC201), MUTE (Q101, 102/Q201, 202), PRE-EMPHASIS (IC102, Q103/IC102, Q203), and L.P.F.(IC102, IC202). The circuit offset (OFFSET CALIBLATION) is canceled automatically when the power turns on. The input level can be set to -20dBs or +4dBs by INPUT ATT SWITCH.(S101/S201)

2. D/A converter

D/A converter consists of the digital filter (IC2), D/A converter (IC301,IC401), L.P.F.(IC301/IC402), DE-EMPHASIS, LINE OUT AMP (IC304, 305, Q302-307 / IC404, 405, Q402-407), -20dBs/+4dBs output level change circuit, MONITOR OUT AMP (IC9) and HEADPHONE AMP (IC10). It can make the cut off characteristic of the L.P.F. moderate to make the sampling frequency eight times by using the digital filter. This improves a linear phase characteristic in the audible frequency range. The output level can be set to -20dBs or +4dBs by OUTPUT ATT SWITCH (S301, S401).

3. Timing control division (IC5, 7, 8, 11)

It regenerates the each timing signal (AD LRCK, BCK, 256Fs) transmitted from the SP-13 board into timing signals (Fs, 32Fs, 128Fs, 256Fs) which are required for A/D and D/A conversion.

DIO-10 BOARD
Digital I/O

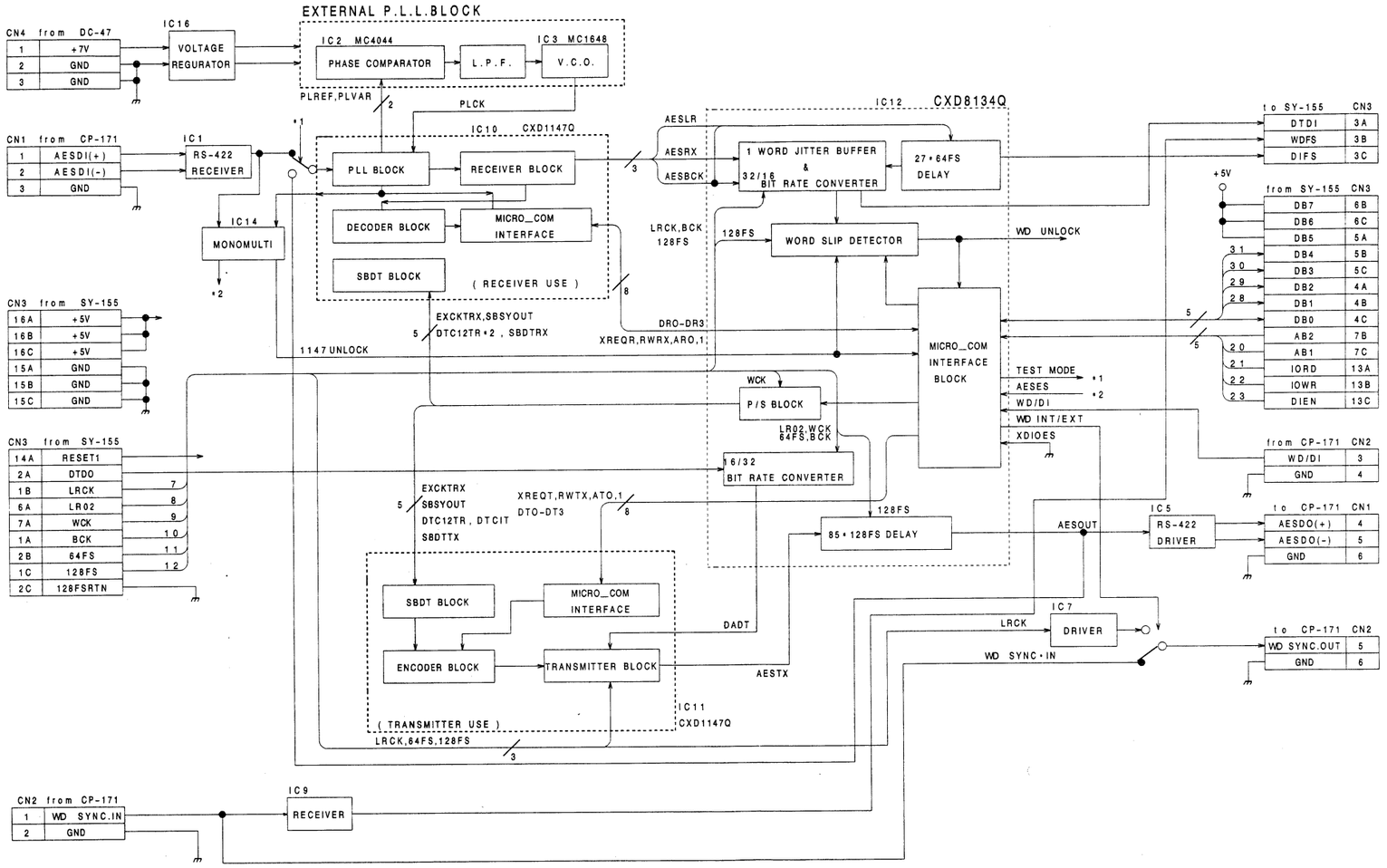

DIO-10 B

DIO-10 boa
signal of th
of the wor

1. Digital I

The digit
is converte
format of t
transmitted

The digit
(AESDI) is
unbalanced
transmitted
In CXD114
clock dem
modulation
audio data,
clock) and
The AESR
in the IC12
signal and
by using t
from the
can be mo
SLIP DET
conversion
transmitte
On the oth
DELAY) a
the SY-15
The chanr
frequency,
(LOCK inf
decoded i
System co
CXD1147Q
micro-con

2. Digital

The dig
internal tr
is convert

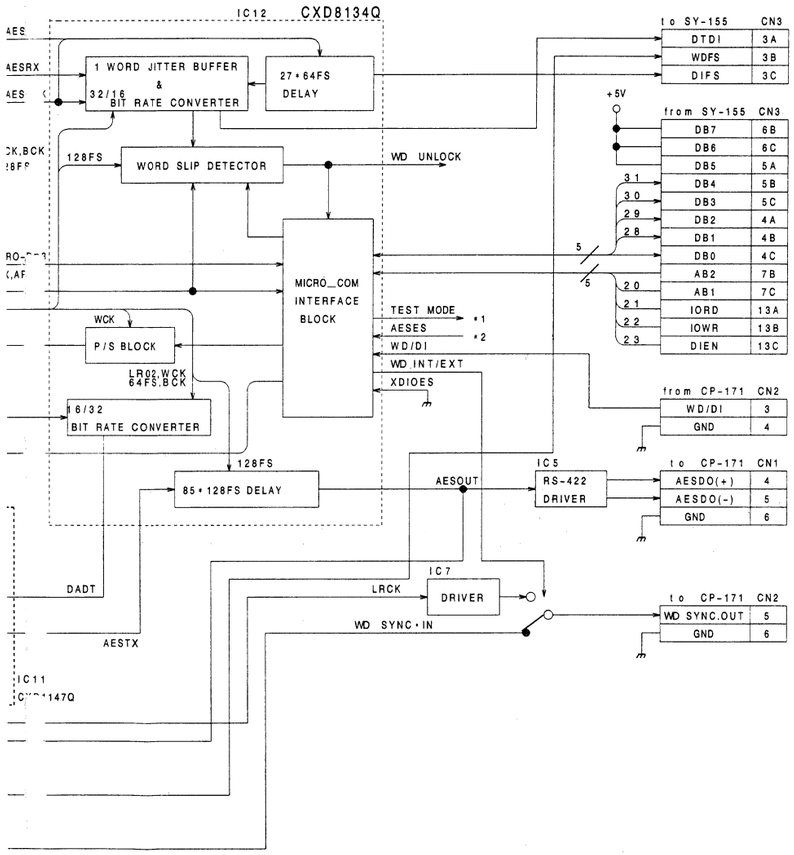

DIO-10
PCM-7050

DIO-10 Board

DIO-10 board performs input/output of the digital signal of the AES/EBU standard and input/output of the word sync signal.

1. Digital In

The digital input signal of the AES/EBU Standard is converted into signal of the internal transmitting format of the PCM-7050/7030, L/R 16bit slots, and transmitted into SY-155 Board.

The digital input signal of the AES/EBU Standard (AESDI) is converted from the balanced type to the unbalanced type with RS-422 receiver (IC1) and transmitted to IC10, CXD1147Q (receiver use).

In CXD1147Q, after synchronizing pulse detection, clock demodulation and demodulation of biphase modulation signals to the NRZ signal, AESRX (digital audio data, the letter half of L/R 32bit), AESLR (FS clock) and AESBCK (bit clock ; 64fs) are generated. The AESRX signal is converted from serial to parallel in the IC12, CXD8134Q by using the AESLR AESBCK signal and then is converted from serial to parallel by using the internal FS clock (LRCK, BCK, 128FS) from the SY-155 board. The data slip information can be monitored as the WD UNLOCK signal (WD SLIP DETECTOR). Then, after 32/16bit slot conversion by the internal FS clock, AESRX is transmitted to the SY-155 board (as a DTDI).

On the other hand, after a phase correction (27 * 64Fs DELAY) against the DTDI, AESLR is transmitted to the SY-155 board (as a DIFS).

The channel status, users bit information (sampling frequency, emphasis, etc.), 1147 UNLOCK signal (LOCK information of PLL) and WD UNLOCK signal, decoded in CXD1147Q, are transmitted into the System control of PCM-7050/7030 through the CXD1147Q micro-computer interface and CXD8134Q micro-computer interface.

2. Digital Out

The digital signal of L/R 16bit slot which is the internal transmitting format of the PCM-7050/7030 is converted the AES/EBU Standard.

DTDO, from the SY-155 board, is converted from 16bit slots to 32bit slots in CXD8134D by the internal FS clock and transmitted to IC11, CXD1147Q (DADT : digital audio data, the letter half of L/R 32bit). On the other hand, the informations of sampling frequency, emphasis, etc., taken from through the CXD8134Q micro-computer interface and through the micro-computer interface block or the SBDT block in the IC11, CXD1147Q are encoded to the channel status (C bit) and users bit (U bit). Then the DADT, after biphase modulation with the C bit and U bit in the transmitter block results in AESTX.

The AESTX signal is transmitted to the IC12, CXD8134Q again and after phase correction (85 * 128fs DELAY) against the internal FS (LRCK) (AESOUT), it is converted from unbalanced type to the blanced type with RS-422 driver (IC5) and output to the CP-171 board as the AESDO.

3. Word Sync Signal

The WD.SYNC IN signal transmitted from the CP-171 board is received with the line receiver (IC9) and is transmitted to the SY-155 board as a WDFS signal.

The WD.SYNC IN signal is transmitted to the CP-171 board as the WD.SYNCOUT signal when the WD INT/EXT signal from the DATA BUS of System CPU (V50) means "EXT". If the WD INT/EXT signal means is "INT", the internal FS (LRCK) is converted to the word sync signal with line driver and output to CP-171 board as the WD.SYNC OUT signal.

DR-139 BOARD
Motor Drive,Sensor

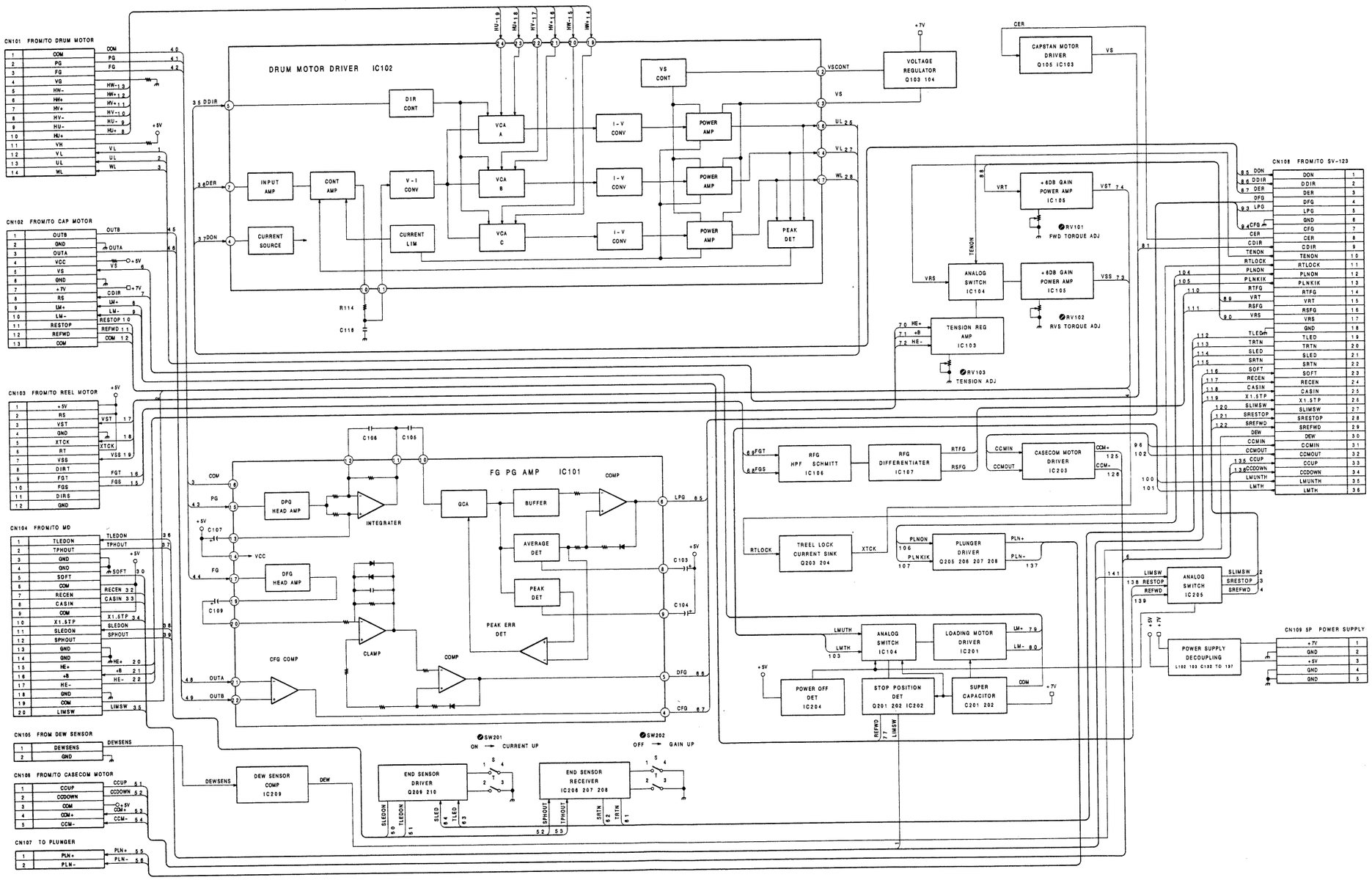

DR-139
PCM-7050

(MOTOR DRIVE,SENSOR)
DR-139 BLOCK DIAGRAM

DR-139 Board

The hardware of DR-139 board consists of the following blocks :

1. Drum FG, PG amplifier and driver (IC101, 102)

Drum FG and PG are a system that forms a magnetizing pattern on the drum and detects the alteration of a magnetic field with a fixed printed coil. Drum PG is converted to TTL LEVEL through a comparator after passing through the head amplifier, integrator and AGC AMP in the FG, PG AMP IC (IC101). Drum FG is converted to TTL LEVEL through a comparator after passing through the head amplifier and the level clamper in the FG, PG AMP IC (IC101).

Three phase brushless motors is used as the drum motor. The drum servo error voltage (DER) from the SV-123 board will be into the control amplifier after passing through the input amplifier in the DRUM MOTOR DRIVER (IC102).

The difference between each phase detected by the peak detector and the output amplitude is taken and receives V-I conversion after passing through L.P.F. which is to stabilize the amplitude control loop, and is input to VCA. On the other hand, the drum rotation phase information input as control signals of VCA for each phase after detected with hall elements (HU-, HU+, HV-, HV+, HW-, HW+).VCA output is connected to the motor coil through the I-V converter and power amplifier, and VCA control signals rotate the motor by the current into the coil that generates a rotating magnetic field. The voltage regulator (Q103, Q104) reduce the power loss of IC102 by providing it with driving voltage according to the output amplitude.

2. Capstan FG amplifier and driver (IC101, 103, Q105)

The capstan FG is a system that forms a magnetizing pattern on the rotor and detects the alteration of a magnetic field with fixed magnetic reluctance elements. The differential output signal (OUTA, OUTB) is input to the comparator in FG, PG AMP IC (IC101) and is converted to TTL LEVEL (CFG), Three phase brushless motor is used as the capstan motor. The driver is in the board unified with the capstan motor, however, most of the power loss is borne by Q105 on this board.

3. Reel FG forming circuit and driver (IC104-107)

The reel FG uses an optical system and is detected in the reel motor and is converted to TTL LEVEL. This FG are detected by differential circuit after passing HPF and the Schmitt circuit (IC106) and is transmitted to the servo micro-computer (CXP-80524 on the SV-123 board). On the other hand, T-side reel error signal (VRT) from the SV-123 board, pass through the attenuator for the FWD torque adjustment and input to the power amplifier (IC105). This power amplifier has 6dB gain. Three-phase brushless motors are used as reel motors. The driver is in the board in the reel motor, however, most of the power loss is borne by Q105.S-side reel error signal (VRS) is shifted to the output signal of the tention regulator amplifier according to modes by the analog switch (IC104) and is input to IC105.

4. Tention regurator amplifier (IC103)

The positioning information of the tention regurator on the mechanical deck is detected by the hall elements and is input to the differential amplifier of IC103 (HE+, HE-). The amplified signal will be selected by the analog switch in record mode and play mode, and the tention servo loop will be formed. RV103 is for FWD tention adjustment.

5. Plunger driver (Q205-208)

The break for the reel motors shall be released by using plunger. The voltage required for kicking and holding plunger is shifted.

6. End sensor driver/receiver (IC206-208, Q209, 210)

By using end sensor driver (Q209, Q210), the square wave of 1KHz comes from servo micro-computer drive LED in the end sensor unit. The driving current value shall be shifted into two steps by using SW201. When a tape ends, the light from LED is reflected by prism in the cassette and is input into the photo transistor inside the end sensor unit.

Photo transistor output (TPH OUT, SPH OUT) enters the END sensor receiver (IC206, 207, 208), changed into TTL LEVEL by compalator then transmitted to micro computer (IC101) in the SV-123 board.

Gain of the amplifier section shall be shifted into two steps by using SW202.

7. Loading cassette compartment motor driver (IC104, 201-204, Q201, 202)

The loading motor driver (IC201) is a bidirectional driver for a loading motor. In order to avoid the transformation of a pinch roller, it includes a circuits (Q201, Q202, IC202) that return to STOP position when the power turned off during installation. The cassette compartment motor driver (IC203) is a bidirectional driver for the cassette compartment motor.

8. T-side reel lock circuit (Q203, 204)

This is to shunt service voltage of T-side reel motor and lock the motor in order to avoid the slack of the tape during loading and unloading mode.

9. Dew sensor detecting circuit (IC209)

The resistance value of sensor mounted on the mechanical deck decreases when humidity is increased. It detects the change and transmits to servo micro-computer.

(KEY,DISPLAY)
KY-192/LED-104/SW-420 BLOCK DIAGRAM

KY-192 BOARD/LED-104 BOARD/SW-420 BOARD
Key Board/Disply

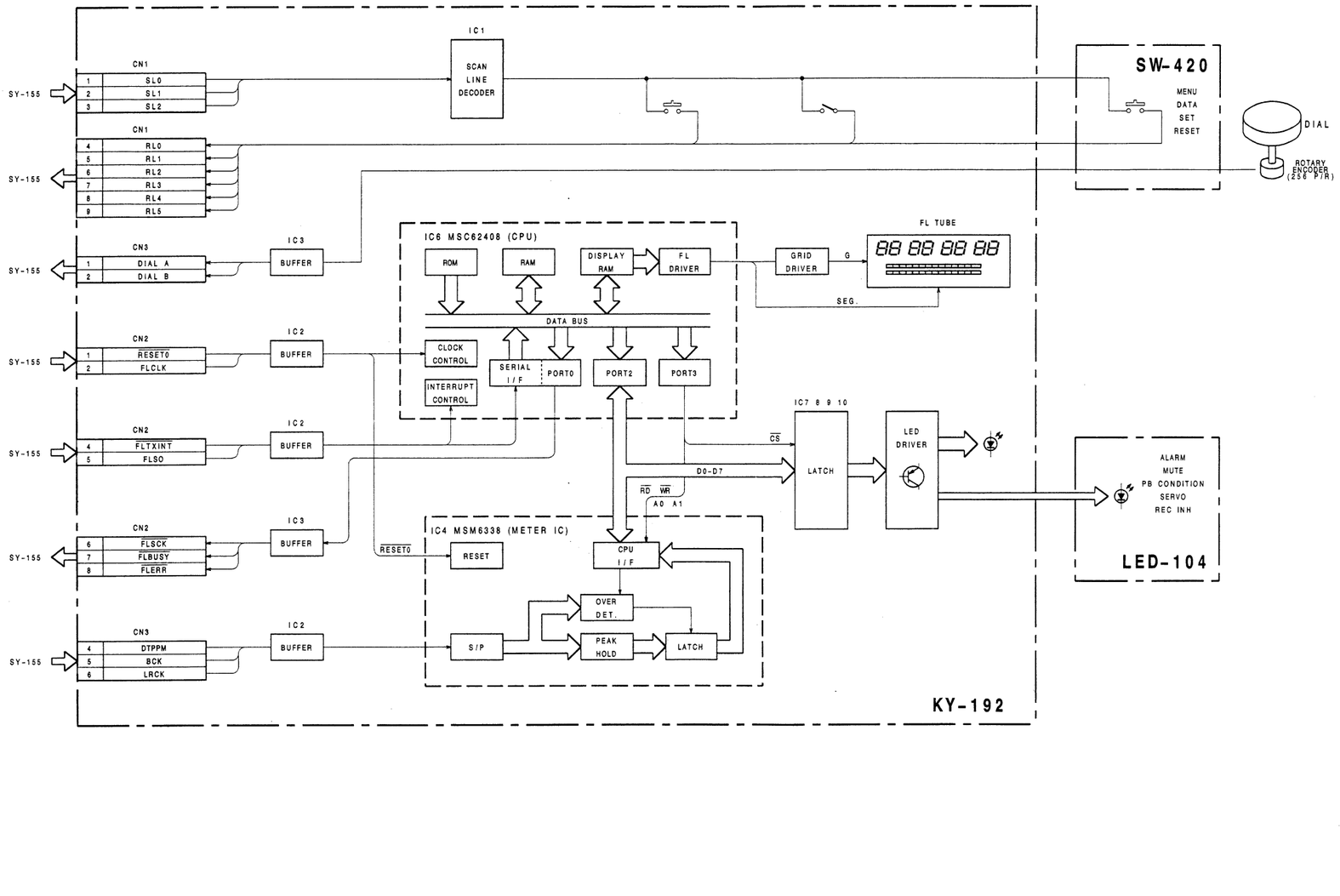

KY-192
LED-104
SW-420
PCM-7050

KY-192, L

The KY-192
on the front
display block
of a peak v
detection of
with ROM, R
and LED ac
and the aud

1. KEY, SW

It decode (I
transmitted
board and c
5) to the SY
for all keys
it outputs th
to the SY-
board.

2. FL tube,

The 16bit di
SP-13 board
into IC4 (MS
In this divis
/P conversio
detection of
according to
sensitivity.
communicati
(V50)) on th
and flashing
METER disp
TIME).
It reads the
and convert
the paramet

(KEY,DISPLAY)
KY-192/LED-104/SW-420 BLOCK DIAGRAM

KY-192, LED-104 and SW-420 Boards

The KY-192 board consists of KEY and SELECTOR on the front panel scan block, and FL tube and LED display block. The METER IC (IC4) performs a holding of a peak value of 16 bit serial audio data and a detection of OVER LEVEL. CPU (IC6) is a 8bits CPU with ROM, RAM, and FL DRIVER. It display FL tube and LED according to the serial data from SY-155 and the audio peak data from the METER IC (IC4).

1. KEY, SW SCAN block

It decode (IC1) the SCAN LINE DATA (SL0, 1, 2) transmitted from ICA4 (TMP82C79) on the SY-155 board and output the RETURN LINE DATA (RL0-5) to the SY-155 board. The Key scan is performed for all keys and selectors on the front panel. Also it outputs the rotary encoder pulse data of the dial to the SY-155 board (Dial A, B) via the SW-420 board.

2. FL tube, LED display block

The 16bit digital audio data (DTPPM) input from the SP-13 board via the SY-155 board will be inserted into IC4 (MSM6338) together with LRCK, BCK signals. In this division, the peak value is held after the S/P conversion and the absolute value conversion. The detection of over level is performed simultaneously according to the over level value and over level sensitivity. The IC6 (MSC62408) executes serial communication with ICF2, MAIN CPU (UPD70216 (V50)) on the SY-155 board and performs lighting, and flashing of FL tube and LED as well as the METER display mode (ex. PEAK HOLD MODE, HOLD TIME).

It reads the peak data from the METER IC (IC4) and converts it to the segments data according to the parameter specified from the main CPU (V50).

(MEMORY START)
MEM-40A BLOCK DIAGRAM

MEM-40A BOARD
Memory Start

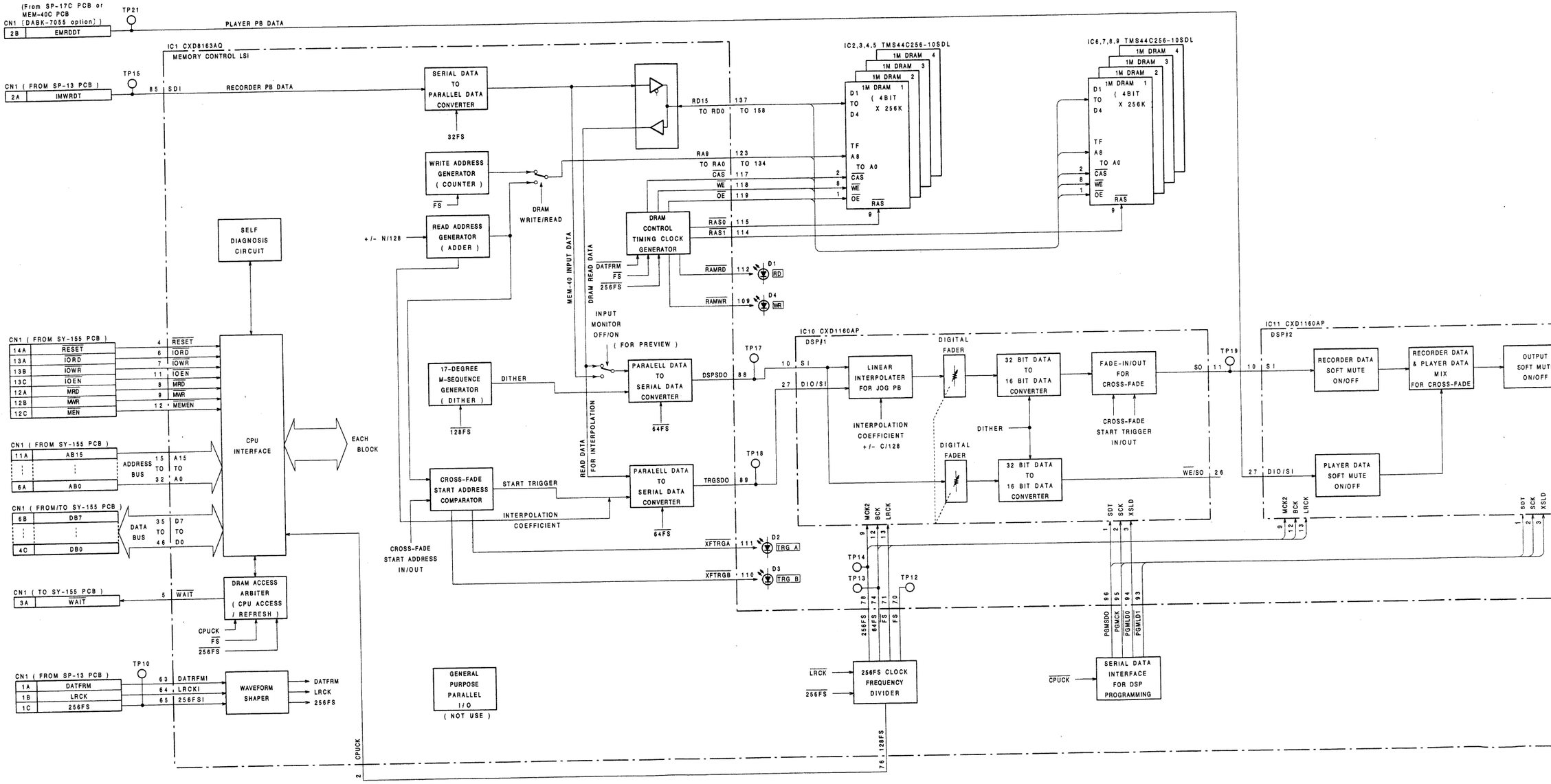

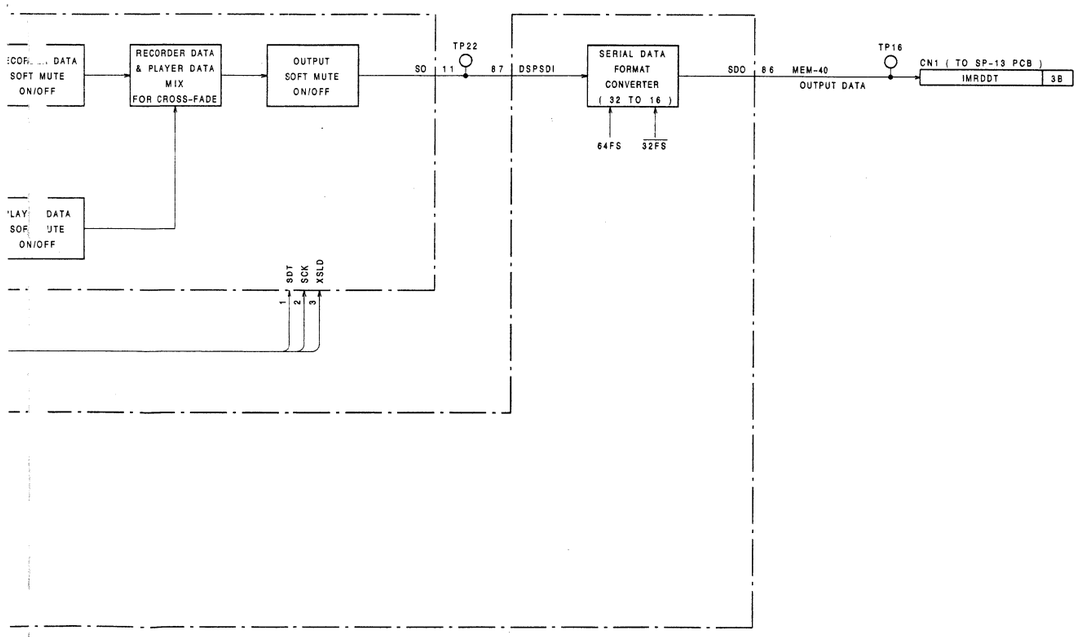

MEM-40A

PCM-7050

MEM-40A Board

The MEM-40A board consists of eight 1Mbit DRAMs (IC2-9), two DSP (CXD1160AP) (IC10, IC11) and the gate array (IC1, CXD8163AQ) that controls them. It writes the reproduced tape sound into the DRAM, reads it out and performs signal processing with DSP that enable the functions such as memory start, spot erase and locating point using a memory. Also it enables users to perform cross-fade with a player sound at editing point if the edit memory board (DABK-7055) (optional) is installed.

First of all, the tape playback sound from the SP-13 board is written into the DRAM after converted into parallel data in gate array (IC1).

Since the memory capacity is 8Mbit, the sound of approximately 5.5 seconds can be held in case of 48kHz sampling frequency. The timing control for reading/writing DRAM is all executed by the gate array and it controls the starting address and start/stop by system control. The refreshment of the DRAM is automatically executed by the gate array twice in every one sampling period.

Secondly, the tape playback sound read from the DRAM is transmitted to the DSP and the signal processing such as cross-fade in automatic editing, FADE OUT/FADE IN for spot erasing and the linear interpolation for locating point using a memory are performed. In case of memory start, no processing occurs in DSP but passing. The DSP program is set by system control through the DSP serial interface built in the gate array when the power turned on. Starting trigger for cross-fade and FADE OUT/FADE IN, and the cofficients for linear interpolation operation are generated in the gate array and are transmitted to the DSP.

The sound after the signal processing in the DSP returns to the gate array and is output to the SP-13 board, receives D/A conversion on the ADA-18 board, is output in digital from the DIO-10 board and recorded into a tape.

In addition, MEM-40A board enables users a direct reading/writing the DRAM data from system control CPU for the self-diagnosis.

(POWER SUPPLY)
PS-211 BLOCK DIAGRAM

PS-211 BOARD
Power Supply

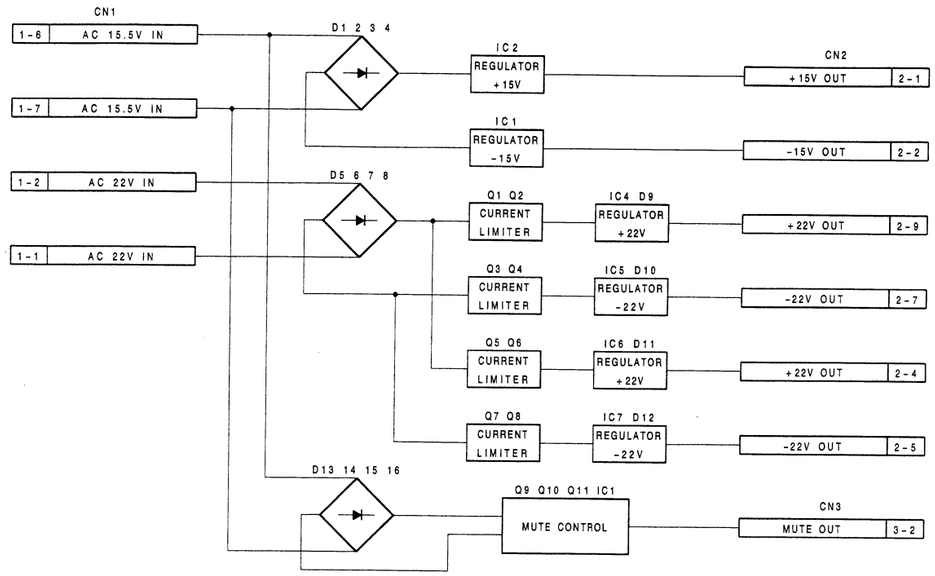

PS-211 Board

The PS-211 board consists of one analog +15V system (IC1/IC2), two analog +22V systems (IC4, D9/IC5, D10/IC6, D11/IC7, D12) and the MUTE CONTROL (Q9-Q11, IC1) which controls mute when the power turned ON/OFF.

+15V uses the analog power source of the ADA-18 board and +22V uses the LINE OUT AMP power source of the ADA-18 board supplying in the different system for ch1 and ch2. The current limitter (Q1, Q2/Q3, Q4/Q5, Q6/Q7, Q8) will work when more than 100mA electricity is sent to the regulator. The MUTE CONTROL outputs the mute release signal three seconds after power on and relay on the ADA-18 board will be turned on, and shortly after power off, it sends the MUTE ON signals and turn off the relay in order to avoid the occurance of poping noise.

PS-211
PCM-7050

27,28 (

(RF AMPLIFIER)
RF-31 BLOCK DIAGRAM

RF-31 BOARD
RF Amplifier

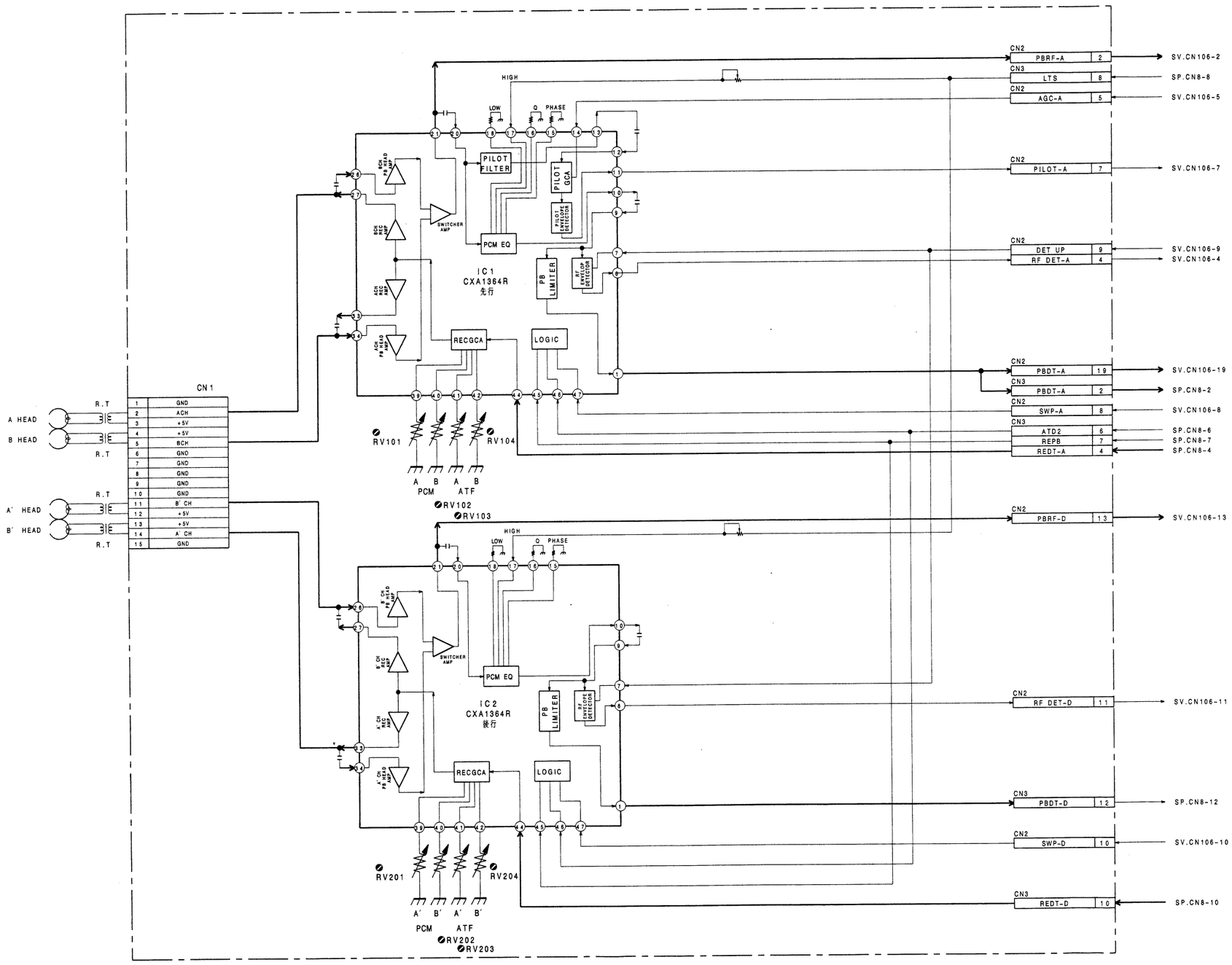

RF-31
PCM-7050

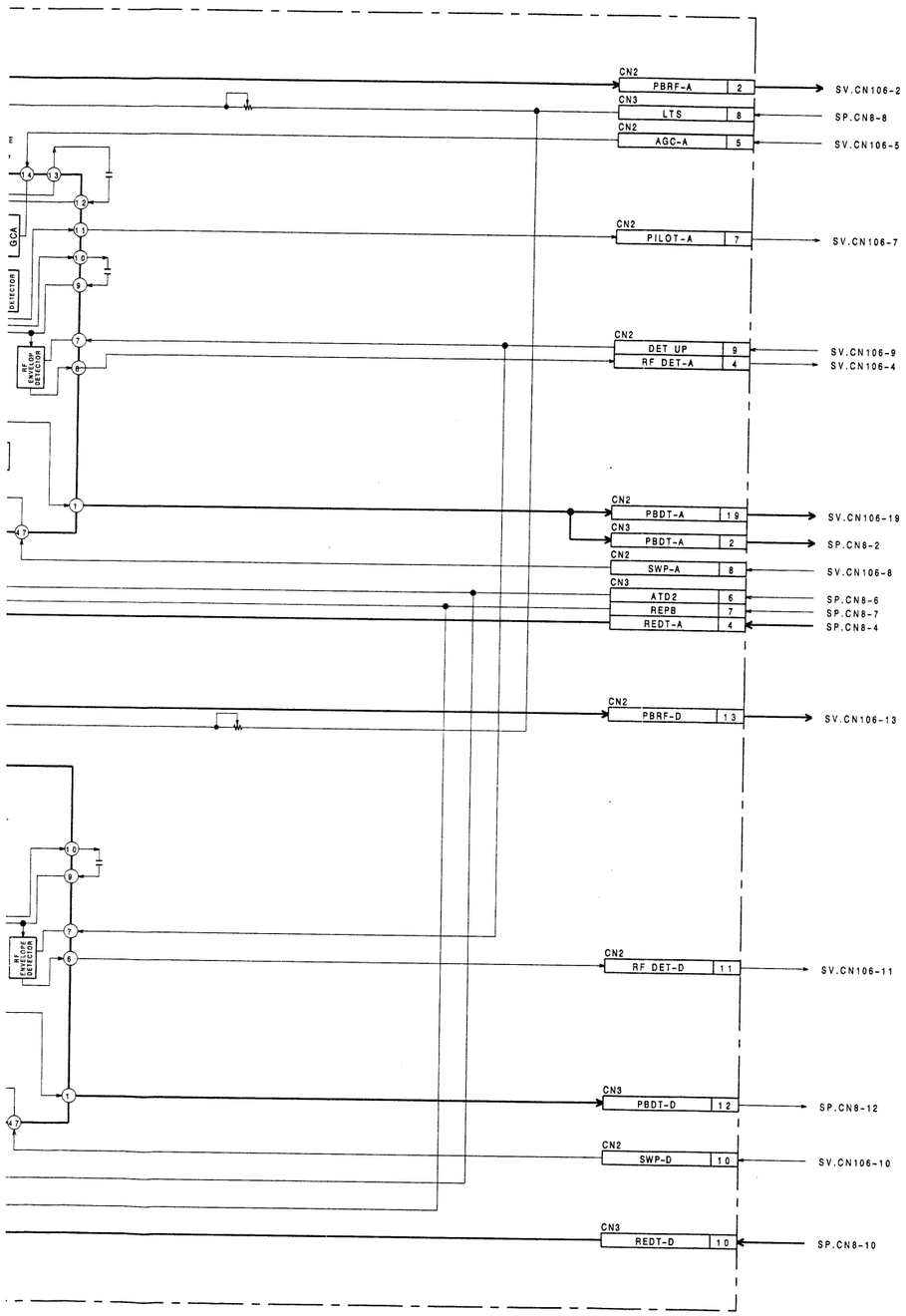

RF-31
PCM-7050

RF-31 Board

The RF-31 board can record and playback the digital signal into the tape and mainly consists of two RF amplifier ICs (IC1, 2) for leading head and trailing head.

The RF amplifier IC is integrated the recording/playback amplifier, PCM equalizer and ATF analog signal processing block into one chip.

1. The REC signal flow

During recording, the recording signal REDT-A (A, Bch) and REDT-D (A', B'CH) from the digital signal processing IC on the SP-13 board is entered into the REC gain control division of the IC (IC1 for leading head recording and IC2 for trailing head recording) on the SP-13 board. The recording signal is converted from the voltage into the current and the current is adjusted to meet the head feature of A, B, A', B'ch (PCM current adjustment leading head : RV101 for Ach, RV102 for Bch, trailing head : RV201 for A'ch, RV202 for B'ch, ATF current adjustment leading head : RV103 for Ach, RV104 for Bch, trailing head : RV203 for A'ch, RV204 for B'ch.). Then, it is amplified 40dB by the amplifier in the IC and is output to the drum.

2. The PB signal flow

The playback signal from the head is amplified 60dB (IC1 amplifies the leading head A, Bch and IC2 amplifies the trailing head A', B'ch) and is output to the SV-123 board as PBRF-A (A, Bch) and PBRF-D (A', B'ch). On the other hand, the playback signal amplified 60dB is amplified and phaze-equalized in each EQ division of IC1 and IC2 (High frequency characteristic adjustment : leading head A, Bch = RV105, trailing head A',B'ch = RV205). During the VARI PITCH, The EQ high frequency characteristic is controlled by VARI PITCH voltage (LTS) from SP-13 board in order to check inferiority of the error rate.The wave-equalized playback signal is converted to the rectangular wave with an amplitude of 870mVp-p by the limitter in the IC and is output as REDT-A (leading head A, Bch) and REDT-D (trailing head A', B'ch).

3. ATF analog signal process division

(1) Detection the detection signal of tracking error (normal speed and variable speed playback)

The IC1 on the RF-31 board extracts the pilot signal (130KHz) from the playback signal and adjusts the gain based on the features of A and B head by the AGC-A signal that the pilot gain control amplifier in the IC1 is transmitted from the SV board.
Then, the envelope of the pilot signal is generated and output to the PILOT-A.

(2) RF envelope detection

The RF envelop detector in the IC inputs the PCM equalizer output and detects the PCM band signal out of the RF signal and output the outcome to the RF DET-A (IC1 leading head A, Bch) and RFDET-D (IC2 trailing head A', B'ch), It also shifts the threshold voltage level to normal PB mode and search mode.

	Ach				Bch				A'ch				B'ch			
	PCM		ATF		PCM		ATF		PCM		ATF		PCM		ATF	
	REC	PB	REC	RB	REC	PB	REC	PB	REC	PB	REC	PB	REC	PB	REC	PB
REPB	H	L	H	L	H	L	H	L	H	L	H	L	H	L	H	L
ATD2	L	L	H	H	L	L	H	H	L	L	H	H	L	L	H	H
SWP-A	L	L	L	L	H	H	H	H	-	-	-	-	-	-	-	-
SWP-D	-	-	-	-	-	-	-	-	L	L	L	L	H	H	H	H

REC/PB SYSTEM CONTROLL LOGIC TRUTH VALUE

RM-77 BOARD
Parallel Remote

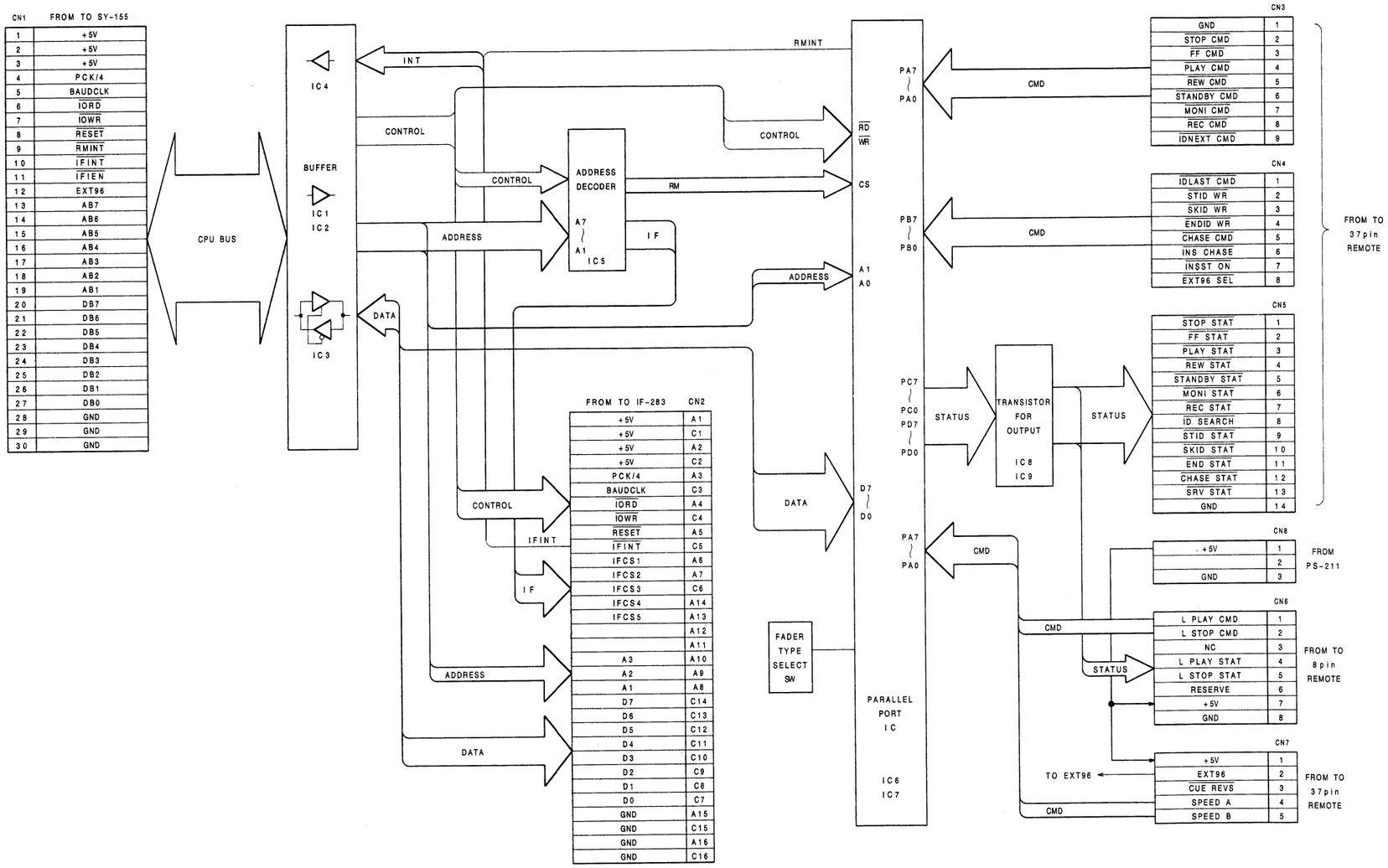

RM-77

The RM-
and 8pin
PORT ga
It sends
process
command
The PS-2
CN6 and
500 (mA
SW1 is
fader sta
for level
CN2 48p
to install
DABK-7

RM-77
PCM-7050

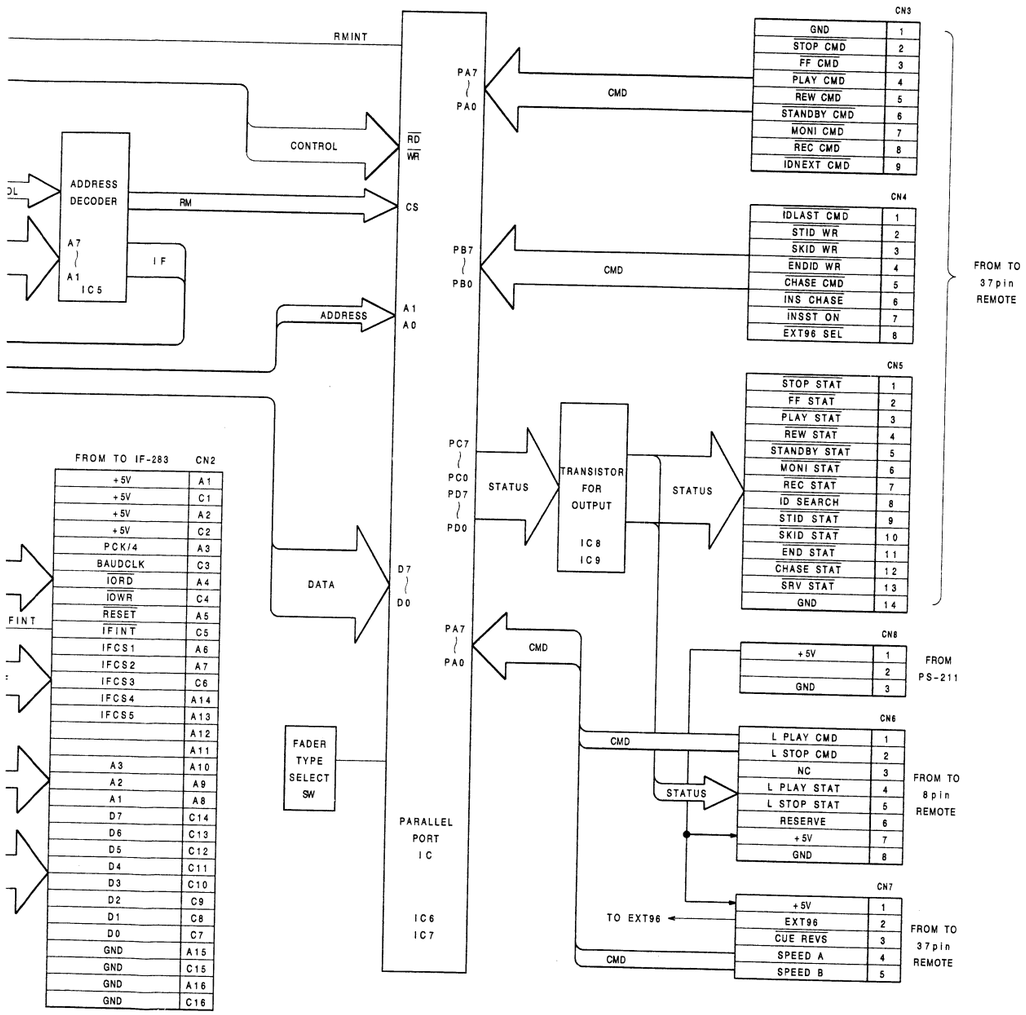

RM-77 Board

The RM-77 board is to control 37pin parallel remote and 8pin fader start remote. It uses two 32bit I/O PORT gate arrays (IC6, 7) to output the status.

It sends the SY-155 board an offering signal for process requirement when 50msec pulse input command is transmitted.

The PS-211 board supplies +5V to 7pin of connector CN6 and 1pin of CN7 and is able to supply up to 500 (mA).

SW1 is to specify the shift the PLAY/STOP for fader start to 2 switch for pulse input and 1 switch for level input.

CN2 48pin DIN connector on the RM-77 board is to install the optional board (IF-283 board) for the DABK-7033 RS-232C.

RM-77

PCM-7050

SP-13 BOARD
Signal Processor

CN1
1	DTPPM
2	GND
3	IMWRDT
4	IMRDDT
5	EMWRDT
6	EMPFDT
7	GND
8	DTDI
9	DTDO
10	GND

DOUT, 1MWRDT, 1MRDDT, EMWROT, EMRFET, DTDI, DOUT

CN2
1	WDFS
2	GND
3	DIFS
4	GND
5	WCK
6	LRO2
7	LRCK
8	BCK
9	64Fs
10	EXT96
11	128Fs
12	GND
13	256Fs
14	GND

WDFS, DIFS, WCK, LRO2, LRCK, 64FS, 128FS, 256FS

CN3
1	GND
2	DTAD
3	GND
4	DTDA
5	GND
6	ADLRCK
7	GND
8	BCK
9	GND
10	AD256Fs
11	EMP
12	DEEMP
13	DFMUTE

DTAD, DOUT, LRCK, 256FS, EMP, DEEMP, DFMUTE

CN4
1	VRFS
2	
3	GND

VRFS

CN5
1	-5V
2	+5V
3	+5V
4	GND
5	GND
6	GND

TP1 TP2

CN6
1	C94M
2	PLCK-A
3	CRCM-A
4	GND
5	SRVS
6	SVRF
7	DFG
8	LSWP
9	AREA
10	RFW
11	
12	GND

C94M, PLCK-A, CRCM-A, SRVS-A, SVCK, DFG, SWP-A, AREA, RFW-A

TP13

CN7
1	ATSY-A
2	GND
3	RFDET-A
4	ATSY-D
5	GND
6	RFDET-D
7	GND

ATSY-A, RFEDET-A, ATSY-D, RFDET-D

CN8
1	GND
2	PBDT-A
3	GND
4	REDT-A
5	GND
6	ATD2
7	REPB
8	LTS
9	GND
10	REDT-D
11	GND
12	PBDT-D
13	GND

PBDT-A, RCDT-A, ATD2, RCPB, LTS, RCDT-D, PBDT-D

CN9
1	GND
2	DATFRM
3	DTC1-A
4	DTC2-A
5	EXCK-A
6	SBDT-A
7	SBSY-A
8	EXSY-A
9	SWP-A
10	GND
11	GND
12	TMRCK
13	DTC1-D
14	DTC2-D
15	EXCK-D
16	SBDT-D
17	SBSY-D
18	EXSY-D
19	SWP-D
20	GND

DATFRM, DTC1-A, DTC2-A, EXCK-A, SBDT-A, SBSY-A, EXSY-A, SWP-A, TMRCK, DTC1-D, DTC2-D, EXCK-D, SBDT-D, SBSY-D, EXSY-D, SWP-D

CN10
1	GND
2	GND
3	IORD
4	IOWR
5	SPEN
6	AB4
7	AB3
8	AB2
9	AB1
10	RESET
11	DB7
12	DB6
13	DB5
14	DB4
15	DB3
16	DB2
17	DB1
18	DB0
19	GND
20	GND

XIORD, XIOWR, XSPEN, AB4, AB3, AB2, AB1, (RESET for LSIs), DB7, DB6, DB5, DB4, DB3, DB2, DB1, DB0

XTAL OSC 24.576MHz
(XTAL OSC)
XTAL OSC 22.5792MHz
CRSH, CRSL, FSEL

ICD3 CXD8184A

MCKO, TRAO, TRDO
CKRS-A, CKRS-D, CLKO, MNTG-A, MNTG-D → CKRA,CKRD,CLKO, MTGA/D
D2-7-A, D2-7-D, C1C2-A/D, SVRF-A/D, SBSY-A/D → MCLK, TRGA/D, RD2-7A/D, C12A/D, SVRA/D, SBSA/D

TIMING GEN
STATUS DECODER → (Fs CPU IF)
ERROR CTR1
ERROR CTR2
MUTING TRIGGER
MUTE TIMING GEN
ERROR CHECKER

ILED, CLED
MUTEEN, (CPUIF), MUTE-D → HDMT

AB1-4, XIORD, XIOWR, XSPEN → XIOW, XIOR, XSEN
ADRS DEC
WRITE PORTS
COMMAND from CPU
READ PORTS
STATUS to CPU
RD, WR
DB0-7 (CPU DATA BUS)
CPU IF

DFCK, VCCK, LRCK, WDFS, DIFS, VRFS, SRVS, C94M, SVRF-A
BCK GEN
1/n
DEVIDE DATA (from CPU IF)
INT/VIDEO, DI/WD
1/8
1/1000
WC, DI, INT, EXT
CLOCK CONTROL
VIDEO 1/1920 or 1/1764
SEARCH, NORMAL
1/4
1/16
EXT Fs FREQ CTR
EXT 9.6K CTR
1/735
1/5880
SEARCH, NORMAL
CPU I F, COUNT VALUE
BCK, MSVF, TRCK, TMRCK, MSRF, CHRF, CHVF, SVCK, SVRA

SBSY-A, SBSY-D, SCKA, SOKD
MM
ICD5 HC123A
SBOK-A, SBOK-D
LTS, ATD2
C2PTR, C1ERR

ICF6(1/2) CXD8319M
HDMT, MTAI, MTAO, MTDO, MUTE-A

(MASTER PLL)
TP5, TP6, TP7, TP18
RF φD VF
LPF
VCO
ICH2 MC4044
ICG3 MC1648

(CHANNEL PLL)
TP8, TP9
RF φD VF
LPF
VCO
TP10, TP11
LV1
ICJ3 CX23065A
ICK2 TLC272C
ICJ2 HCU04
ICK5 LM358
LTS GEN
TP12
RV1, RV2

ICC3
EMPFDT, EMWRDT, DTAD, DTDI, IMRDDT, IMWRDT, DOUT, LRCK,WCK,64Fs, BCK, REPB-A,REPB-D, REDT-A,REDT-D, ATD2-A,ATD2-D, C94M, PLCK-A,PLCK-D, DFG,SWP-A,AREA, RFW-A
DPD, DTPM, DAD, DDI, DRD, DTRM, DOUT, WCK,LRCK,64Fs, BCK, REPA,REPB, RCOK, REDA,REDD, RTST1-7, AD2A,AD2D, ATD2, ERD, C94M, PCKA,PCKD, LRCK, FSEL,XRAW,WAR, DFG,RFW,SWP,ARE,RFA/D, SER
AIN, DIN, NORMAL, OUTWR
ZERO CROSS MUTE
REH, NORMAL, INPUT, REPRO
MUTE, MUTE STS
REC/PB CTL
ATD2 GEN
REC DATA GATE
TEST REC DATA GEN
DPGA/D, DTI
EXSY GEN
DPG GEN

SRVS-A, SVCK, CRCM-A,PLCK-A, C94M

(SIGNAL PROCESSOR)
SP-13 BLOCK DIAGRAM

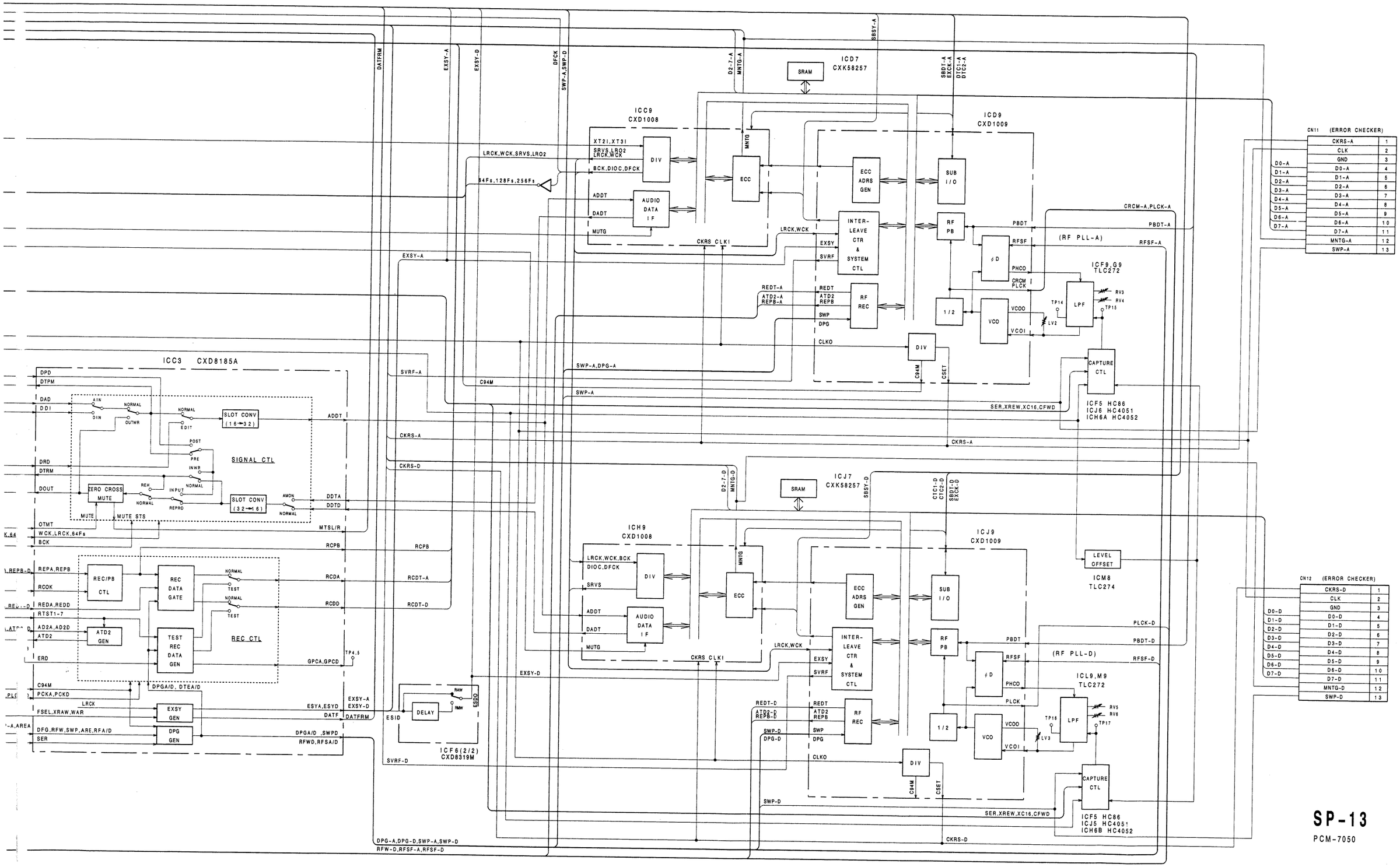

SP-13
PCM-7050

SP-13 Board

The SP-13 board has the features that encodes the audio and sub-code signals according to the DAT format and sends the encoded signal to the recording amplifier ; decodes the signal transmitted from the playback amplifier and takes the audio and sub-code signals to send each boards.

The audio signals transmitted from the A/D converter (ADA-18 board) and AES/EBU D-IN (DIO-10 board) are first entered into CXD8185A (ICC3). The audio signal from ICC3 will be transmitted to CXD1008 (IC9/ICH9) through the conversion from 16bit slot into 32bit slot after selected by the AUDIO INPUT switch (ANALOG/DIGITAL) in ICC3. On the other hand, the sub-code came from the SY-155 board enters into CXD1009 (ICD9/ICJ9). The audio signal and the sub-code signal receive the interleave, ECC encoding and 8-10 modulation in CXD1008 and CXD1009, and are transmitted to the recording amplifier (RF-31 board) with the ATF signal and are recorded on the tape (RCDT-A, RCDT-D).

The playback signal (PBDT-A, PBDT-D) transmitted from the playback amplifier (RF-31 board) enters into CXD1009. Data extraction clock is generated by RFPLL circuit and the playback data is extracted by this clock. The extracted data receive the 10-8 demodulation, ECC decoding and deinterleave in CXD1008 and CXD1009, and are output as the audio signal and sub-code signal. The sub-code signal is sent to the SY-155 board. The audio signal receives the conversion from 32bit slot to 16bit slot in CXD8185A and is transmitted to the D/A converter (ADA-18 board), AES/EBU D-OUT (DIO-10 board), METER (KY-192 board) and MEMORY (MEM-40 board).

The signal process ICs for DAT (CXD1008, 1009) are used in pairs in the leading head and trailing head. Generally, the leading head for recording and the trailing head for playback. In SUB INSERT mode, the leading head for playback and the trailing head for recording the sub-code. Also, the tape recorded with the Wide track mode is played back the leading head.

The SP-13 board includes the following circuit other than the above :

Error block counter (in CXD8184A) : enables the CPU (SY-155 board) to monitor the error rate by counting the numbers of error detected blocks during playback.

Muting circuit (in CXD8184A and CXD8185A) : performs a zero-cross mute to the playback audio signal when playback error rate becomes worse than the initially set-up theshold.

PLL circuit : consists of the Master PLL which generates master clock and the Channel PLL which generates the reference clock for the recording signal. The dividing circuit (in CXD8184A) is controlled by CPU and enables the VARI SPEED function.

Frequency counter (in CXD8184A) : measures frequency of the external reference clock and EXT SOURCE from the parallel remote connector.

Audio signal switch circuit (in CXD8185A) : shifts signal flow by corresponding with the modes such as memory start, editing as well as the normal recording and playback.

Test signal generating circuit (in CXD8185A) : generates test signals in order to make the test tape for the mechanical servo adjustment.

SP-17C Board

The SP-17C board consists of the DSP (CXD1160AP, IC10) and the gate array (CXD8163AQ, IC1) that controls them. It performes an input signal processing from the outside with DSP, and using SP-17C board enables to cross-fade this sound signal with the recorder sound at an editing point.

The DSP program is set by the system control through the DSP serial interface built into the gate array when the power is turned on. Starting triggers for cross-fade and FADE-OUT/FADE-IN are generated in the gate array and are transmitted to the DSP.

The sound after its signal processing in the DSP is sent to the MEM-40A board. It is added to the recorder sound in the DSP (CXD1160AP, IC11) on the MEM-40A board, and is retured again to the gate array.

After that, it is output to the SP-13 board.

SP-17C BOARD
Input Fader

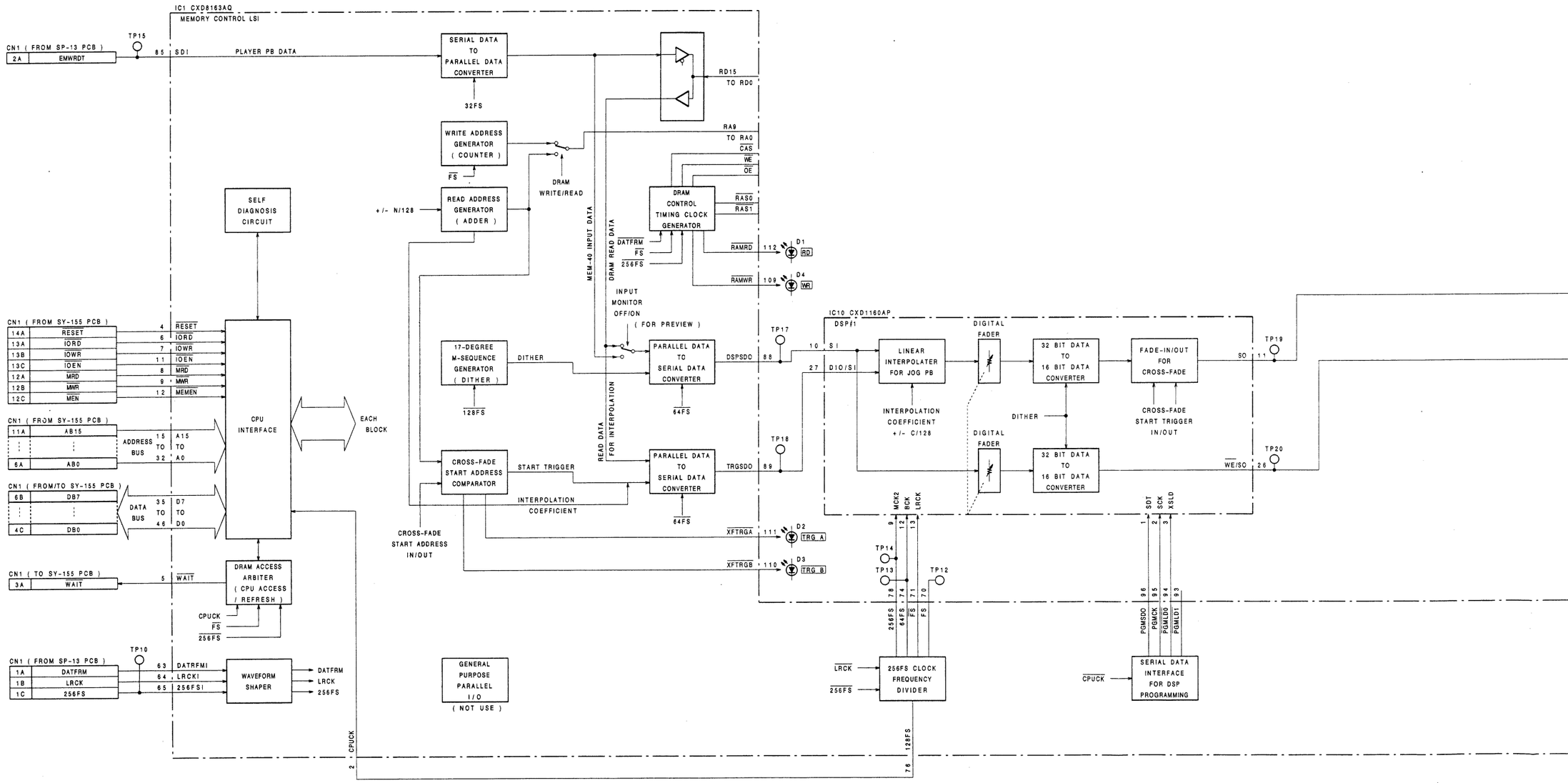

(INPUT FADER)
SP-17C BLOCK DIAGRAM

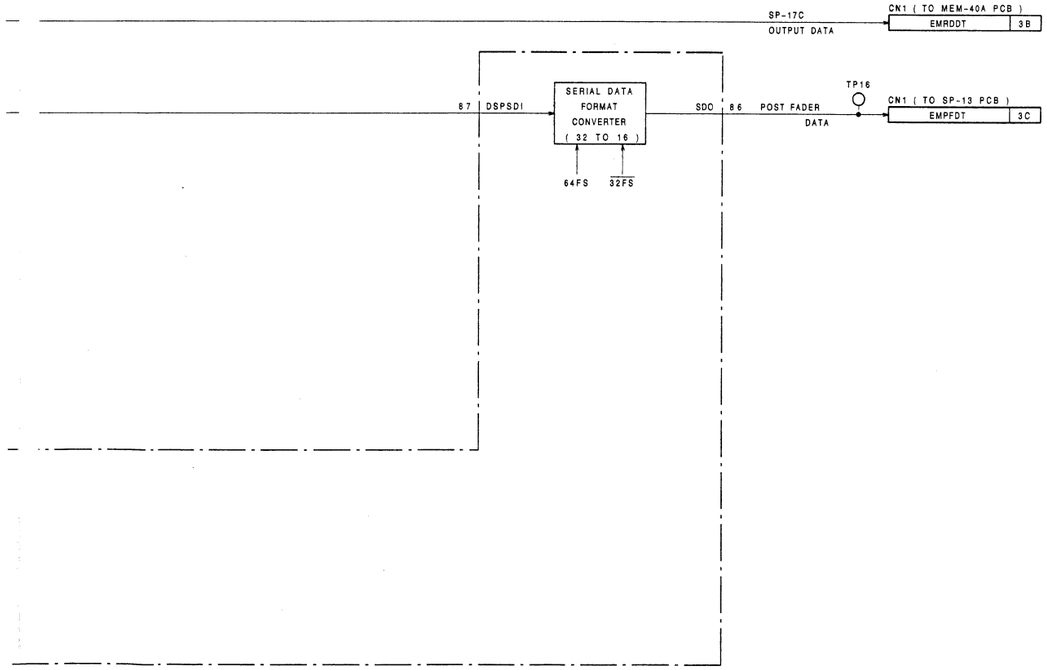

SP-17C

PCM-7050

SY-155 BOARD
System Control

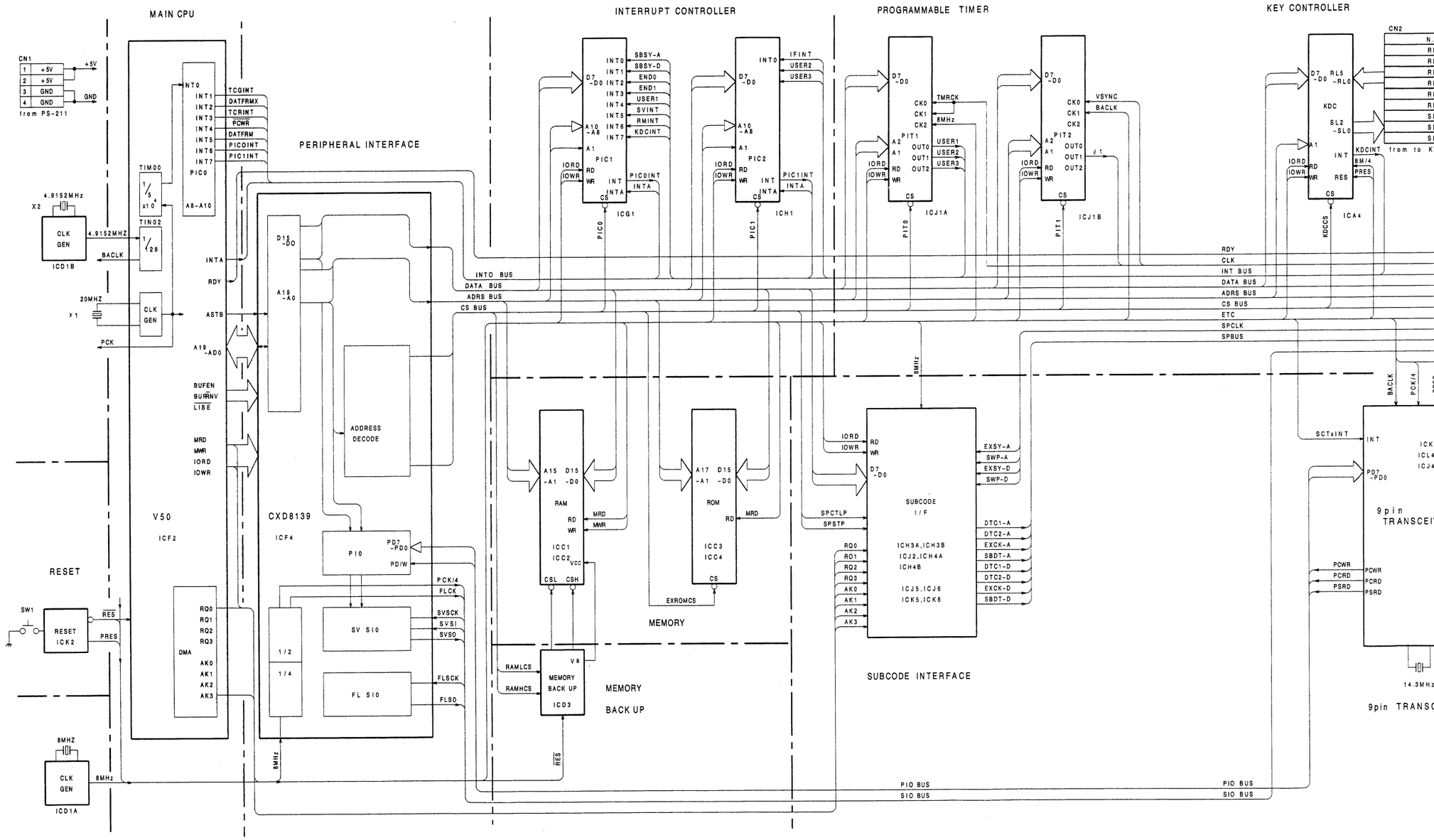

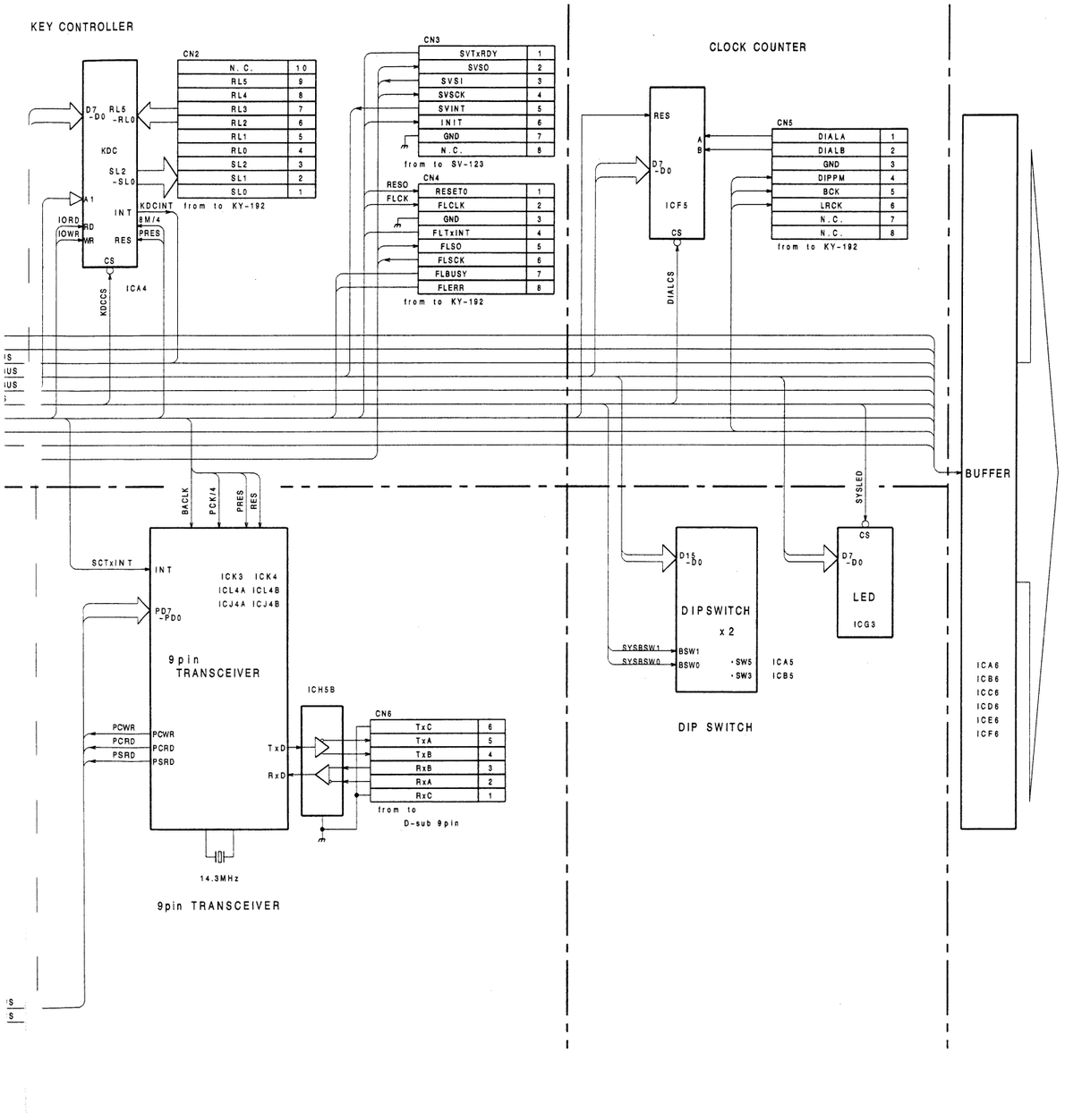

from to SP-13

CN9

GND	1
DATFRAM	2
DTC1-A	3
DTC2-A	4
EXCK-A	5
SBDT-A	6
SBSY-A	7
EXSY-A	8
SWP-A	9
GND	10
GND	11
TMRCK	12
DTC1-D	13
DTC2-D	14
EXCK-D	15
SBDT-D	16
SBSY-D	17
EXSY-D	18
SWP-D	19
GND	20

CN10

GND	1
GND	2
IORD	3
IOWR	4
SPEN	5
AB4	6
AB3	7
AB2	8
AB1	9
RESET	10
DB7	11
DB6	12
DB5	13
DB4	14
DB3	15
DB2	16
DB1	17
DB0	18
GND	19
GND	20

CN7

WDFS	1
GND	2
DIFS	3
GND	4
WCK	5
LRO2	6
LRCK	7
BCK	8
64Fs	9
EXT96	10
128Fs	11
GND	12
256Fs	13
GND	14

CN8

DTPPM	1
GND	2
IMWRDT	3
IMRDDT	4
EMNRDT	5
EMPFDT	6
GND	7
DTDI	8
DTDO	9
GND	10

MOTHER BLOCK

from to MEM-40

CN13

+5V	A1
+5V	B1
+5V	C1
GND	A2
GND	B2
GND	C2
RES	A3
CLKOUT	B3
CLKRTN	C3
IORD	A4
IOWR	B4
MRIEN	C4
MRD	A5
MWR	B5
MRMEN	C5
AB15	A6
AB14	B6
AB13	C6
AB12	A7
AB11	B7
AB10	C7
AB9	A8
AB8	B8
AB7	C8
AB6	A9
AB5	B9
AB4	C9
AB3	A10
AB2	B10
AB1	C10
AB0	A11
DB7	B11
DB6	C11
DB5	A12
DB4	B12
DB3	C12
DB2	A13
DB1	B13
DB0	C13
WAIT	A14
IMRDDT	B14
N.C.	C14
IMWRDT	A15
EMRDDT	B15
256RTN	C15
DATFRM	A16
LRCK	B16
256FS	C16

CN14

+5V	A1
+5V	B1
+5V	C1
GND	A2
GND	B2
GND	C2
RES	A3
CLKOUT	B3
CLKRTN	C3
IORD	A4
IOWR	B4
MPIEN	C4
MRD	A5
MWR	B5
MPMEN	C5
AB15	A6
AB14	B6
AB13	C6
AB12	A7
AB11	B7
AB10	C7
AB9	A8
AB8	B8
AB7	C8
AB6	A9
AB5	B9
AB4	C9
AB3	A10
AB2	B10
AB1	C10
AB0	A11
DB7	B11
DB6	C11
DB5	A12
DB4	B12
DB3	C12
DB2	A13
DB1	B13
DB0	C13
WAIT	A14
EMRDDT	B14
EMPFDT	C14
EMWROT	A15
N.C.	B15
256RTN	C15
DATFRM	A16
LRCK	B16
256FS	C16

from to DIO-10

CN15

+5V	A1
+5V	B1
+5V	C1
GND	A2
GND	B2
GND	C2
RES	A3
N.C.	B3
N.C.	C3
IORD	A4
IOWR	B4
DIEN	C4
N.C.	A5
N.C.	B5
N.C.	C5
N.C.	A6
N.C.	B6
N.C.	C6
N.C.	A7
N.C.	B7
N.C.	C7
N.C.	A8
N.C.	B8
N.C.	C8
N.C.	A9
N.C.	B9
N.C.	C9
WCK	A10
AB2	B10
AB1	C10
LRO2	A11
DB7	B11
DB6	C11
DB5	A12
DB4	B12
DB3	C12
DB2	A13
DB1	B13
DB0	C13
DTDI	A14
WDFS	B14
DIFS	C14
DTDO	A15
64FS	B15
128RTN	C15
BCK	A16
LRCK	B16
128FS	C16

from to TC-58

CN11

RES1	1
PCK	2
IORD	3
IOWR	4
TCCS	5
TCRINT	6
TCGINT	7
VSYNC	8
AB8	9
AB7	10
AB6	11
AB5	12
AB4	13
AB3	14
AB2	15
AB1	16
DB7	17
DB6	18
DB5	19
DB4	20
DB3	21
DB2	22
DB1	23
DB0	24
GND	25
DATFRM	26
LRCK	27
WCK	28
256Fs	29
GND	30

from to RM-77

CN12

+5V	1
+5V	2
+5V	3
PCK/4	4
ϕ1	5
IORD	6
IOWR	7
RES1	8
RMINT	9
IFINT	10
IFIEN	11
EXT96	12
AB7	13
AB6	14
AB5	15
AB4	16
AB3	17
AB2	18
AB1	19
DB7	20
DB6	21
DB5	22
DB4	23
DB3	24
DB2	25
DB1	26
DB0	27
GND	28
GND	29
GND	30

SY-155
PCM-7050

(SYSTEM CONTROL)
SY-155 BLOCK DIAGRAM

SY-155 Board

The SY-155 board is the main CPU (ICF2) and peripheral circuit that perform the main control operation as well as the mother board of the PCM -7050/7030.

There are a gate array (ICF4), an interrupting controller (PIC) (ICG1,ICH), an interval timer (PIT) (ICJ1A,B), a key encoder (ICA4),a sub-code serial I/F (ICJ6,ICK6), a two-phase clock counter, ROM (256K) (ICC3,ICC4), RAM (64K) (ICC1,ICC2), RAM BACK UP circuit (ICD3), a sub-CPU for RS422 (ICK3, ICK4) as peripheral units.

MAIN CPU (μ D70216-10,ICF2) ;

PD70216-10 (V50) is a 16bit micro-processor with the operation frequency of 10MHz.

Gate array for sub-CPU I/F (CXD8139AQ,ICF4) ;

consists of two synchronous SIOs, one PIO and the address decoder.

PIC (μ D71059,(ICG1,ICH1)) ;

Control 17 interrupts with a master PIC in the main CPU chip.

PIT (μ D71054 (ICJ1A,ICJ1B)) ;

An interval timer with three 16bit, used for a timer for the operation system, baud rate generator, V-SYNC input detector.

Key encoder (TMP82C79,ICA4) ;

Inputs key data from the KY-192 board and performs sensor matrix process.

Sub-code serial I/F (CXD8130Q (ICJ6,ICK6), 27C256 -SCCKV1.0 (ICK5,ICJ5)) ;

Synchronous SIO for controlling CXD1009 in the SP-13 board.

Two-phase clock counter (μ D4702G,ICF5) ;

Two-phase clock counter from the dial.

MEMORY (RAM) back up circuit (ICD3) ;

Performs back up for the MEMORY (RAM) during the power-off by using a condenser (C12,C13) and lithium battery (BT1).

Sub-CPU for the RS-422 (μ PD78C11 (ICK3), μ PD71051 (ICK4)) ;

Converts the RS-422 serial communication into the parallel communication for the main CPU.

DESCRIPTION OF THE INTERRUPT

PIC0 : INT0 : System timer interruption for a real -time operating system RT30V for 5msec.
INT1 : Interruption for the data loading from the time code generator.
INT3 : Interruption for data ready from the external time code reader.
INT4 : Interruption of the PIO RxRDY.
INT5 : DAT FRAME interruption for 30msec.
INT6 : Receiving usage for PIC1
INT7 : Receiving usage for PIC2

PIC1 : INT0 : Interruption for the sub-code input /output of the leading processor.
INT1 : Interruption for the sub-code input/ output of the trailing processor.
INT2 : Interruption by the access completion of the leading processor.
INT3 : Interruption by the access completion of the trailing processor.
INT4 : RESERVED
INT5 : Interruption from the servo CPU (CX80524).
INT6 : Interruption to inform the input alternation of the parallel remote.
INT7 : Interruption from the Key encoder (TMP82C79).

PIC2 : INT0 : Interruption for IF-283, RS-232C
INT1 : RESERVED
INT2 : Timer interruption for the FL tube CPU.

, 57, 58

SV-123 BOARD
Servo

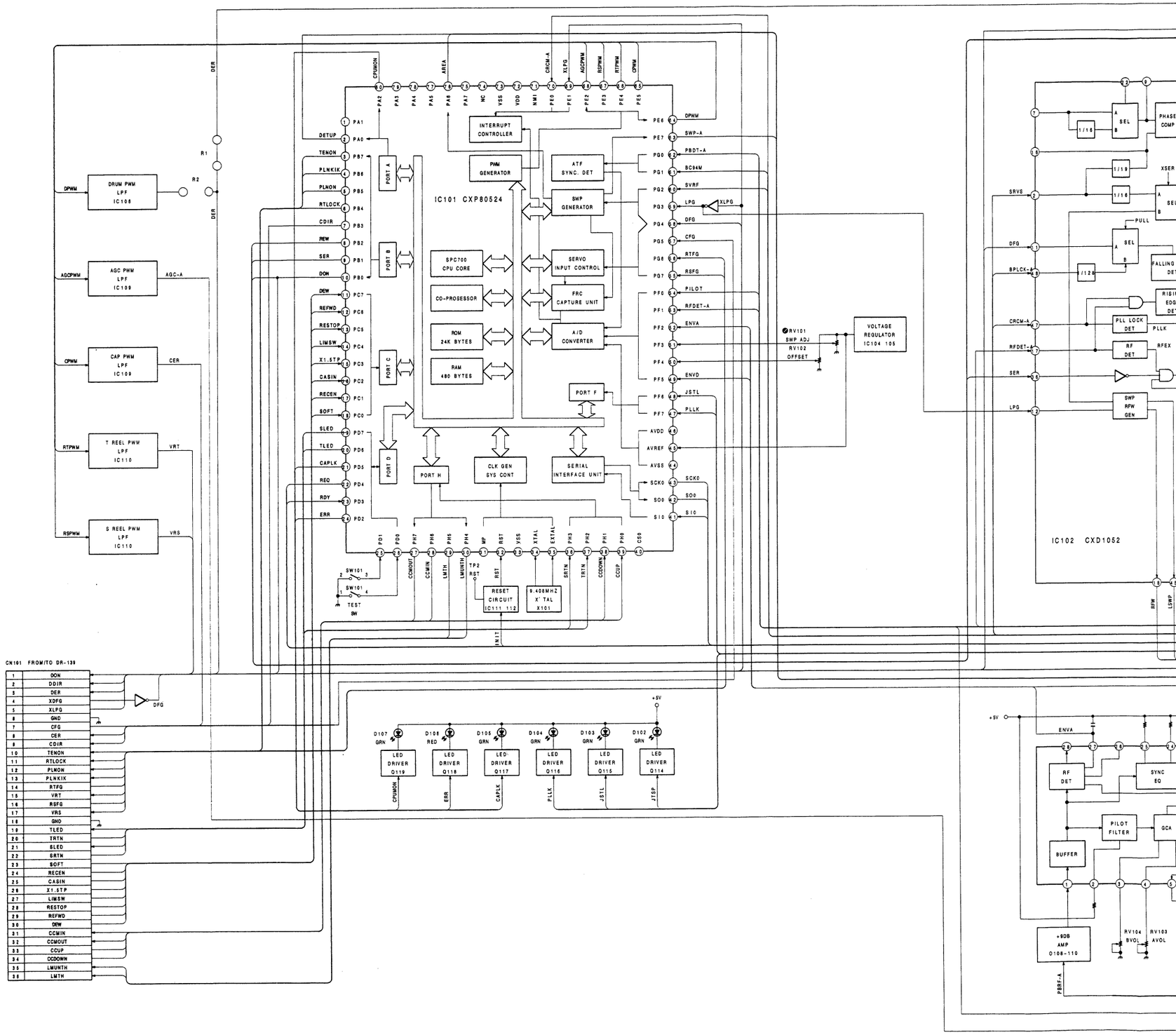

1	DON
2	DDIR
3	DER
4	XDFG
5	XLPG
6	GND
7	CFG
8	CER
9	CDIR
10	TENON
11	RTLOCK
12	PLNON
13	PLNKIK
14	RTFG
15	VRT
16	RSFG
17	VRS
18	GND
19	TLED
20	TRTN
21	SLED
22	SRTN
23	SOFT
24	RECEN
25	CASIN
26	X1.5TP
27	LIMSW
28	RESTOP
29	REFWD
30	DEW
31	CCMIN
32	CCMOUT
33	CCUP
34	CCDOWN
35	LMUNTH
36	LMTH

(SERVO)
SV-123 BLOCK DIAGRAM

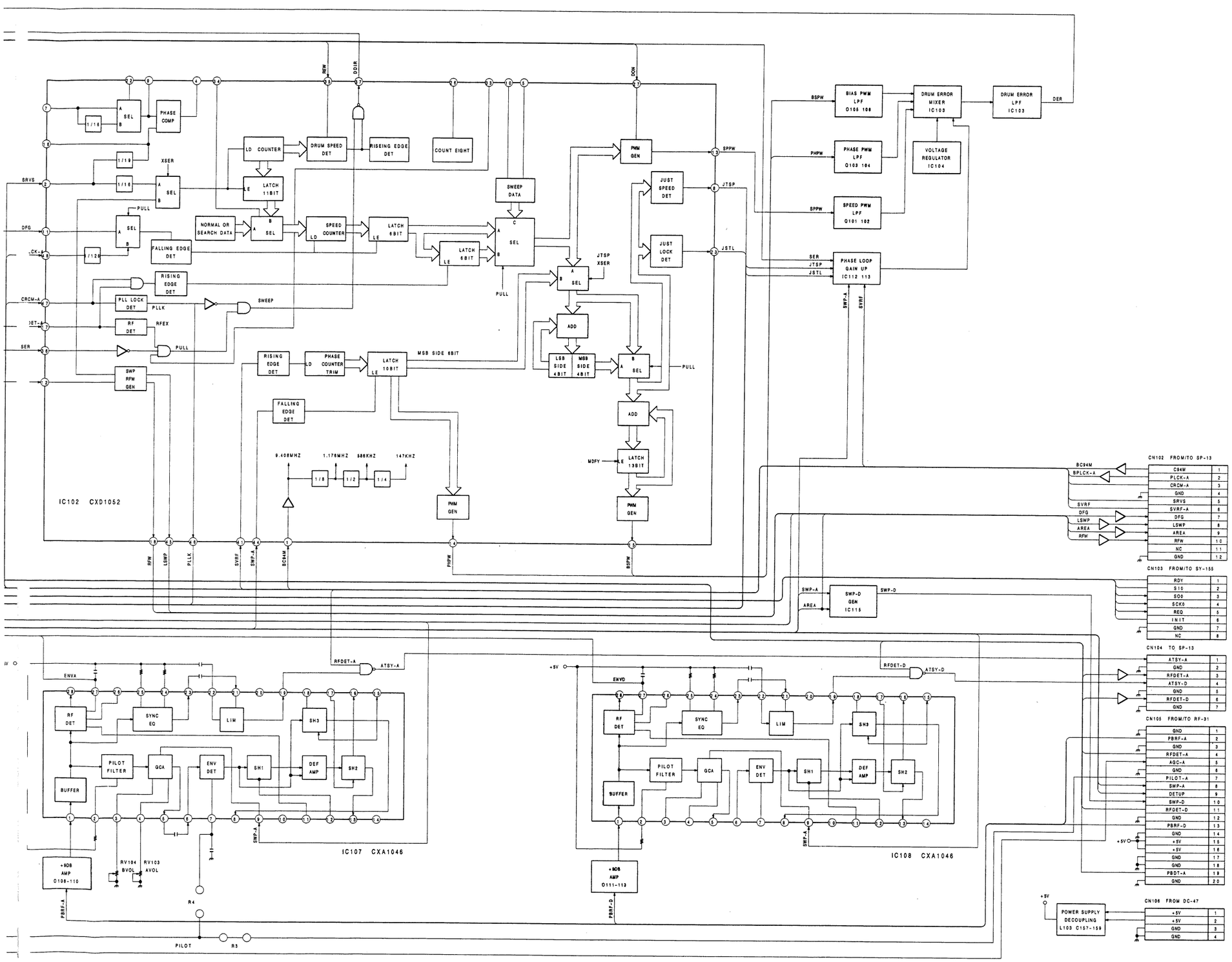

CN102 FROM/TO SP-13	
C94M	1
PLCK-A	2
CROM-A	3
GND	4
SRVS	5
SVRF-A	6
DFG	7
LSWP	8
AREA	9
RFW	10
NC	11
GND	12

CN103 FROM/TO SY-155	
RDY	1
S10	2
SO0	3
SCK0	4
REQ	5
INIT	6
GND	7
NC	8

CN104 TO SP-13	
ATSY-A	1
GND	2
RFDET-A	3
ATSY-D	4
GND	5
RFDET-D	6
GND	7

CN105 FROM/TO RF-31	
GND	1
PBRF-A	2
GND	3
RFDET-A	4
AGC-A	5
GND	6
PILOT-A	7
SWP-A	8
DETUP	9
SWP-D	10
RFDET-D	11
GND	12
PBRF-D	13
GND	14
+5V	15
+5V	16
GND	17
GND	18
PBDT-A	19
GND	20

CN106 FROM DC-47	
+5V	1
+5V	2
GND	3
GND	4

SV-123
PCM-7050

SV-123 Board

The hardware of SV-123 board consists of the following blocks.

1. CXP80524 (IC101) and its peripheral circuit

CXP80524 (IC101) is the one-chip microprocessor which leads the center of the SV-123 board. It consists of CPU core, ROM, RAM blocks and the peripherals such as FRC capture, ATF sync detection circuit, etc. The error signals of each servo system are output as PWM waveforms (DRUM, AGC, CAP, T REEL, S REEL) and transmitted to each motor driver after removing carrier in L.P.F.(IC106, IC109, IC110).

(1) Operation process of the capstan servo

During REC mode, forward the tape in constant speed in order to get a track pitch based on the format. During play mode, use the tracking servo in order to make that the head traces correctly on the track and control the forward phase of tape. During CUE mode, run the tape for both forward and backward with multiple speed of 1/5, 1/2, 1, 2.5, 8, 16.

(2) Operation process of the reel servo

During FF and REW modes, use servo as the tape linear speed becomes 150 times. Reduce the speed to 80 times at the end of the tape.
During REC and play modes, feed back the positioning information of the tention regulator to S-motor in order to stabilize the head contact. In other mode, output a fixed data that generates an appropriate torque.

(3) Operation process of the reel counter

The tape running distance is calculated from the reel FG.
The tape running time is displayed in realtime at the display.

(4) The switch conditions on the mechanical deck receiving and device control

- Control for the loading motor
  The loading moter is controlled by detecting the position of the rotary encoder condition.
- Control for the cassette compartment motor
  The cassette compartment motor is controlled in accordance with the cassette compartment switch codition.
- Detection for the condition of the cassette identification holes (detection of cassette in/out, REC inhibit, track pitch and pre-recorded tape).
- The end sensors driving signal generation and tape end detection.
- Control for the reel break plunger.

(5) Drum servo IC control

CXD1052 (IC102) and CX20174 on DR-139 board are controlled.

(6) Generation for the information signal of the drum rotary phase

SWP-A, AREA signals are generated. These signals are sent to the RF-31 board and SP-13 board. Play the test tape during the SWP adjustment mode and adjust the phase between the SWP-A and playback RF waveform to comply with the standard. The adjusting data is stored in the memory of the SY-155 board.

(7) Gain control of the PILOT GCA in CXA1364 (RF-31 board)

Playback the test tape during the AGC adjusting mode, and perform automatic adjustment on each A head and B head for the PILOT GCA gain to stabilize the added voltage of the track contents of the pilot envelope waveform.
The adjusting data is stored in the memory of the SY-155 board.

(8) Communication with the system controller

Asynchronous serial communication is performed between SY-155 board.

2. CXD1052 (IC102) and its peripheral circuit

CXD1052 (IC102) is the digital servo IC for the drum motor. It has the loops for speed, phase and bias control, outputs the error signals in PWM waveforms (SPPW,PHPW,BSPW) which are added after removing the carrier in L.P.F. and transmitted to the moter driver (DR-139 board).

(1) Operation process of normal servo

During REC and PLAY modes, CXD1052 operates to lock the drum phase to the reference phase of signal processing block.
In REC mode, the drum rotates to make the tape pattern specified by DAT format.
In PLAY made, the drum rotates to time the reproduced RF signal to the reference phase of signal processing block.
A gain-up circuit is added to speed up the phase lock operation.

(2) Operation process of search servo

During FF and REW modes, CXD1052 operates to regulate the period of PLL CK extracted from RF signal.
In this way, the relative speed between heads and tape is kept constant as long as the servo loop operates.
This makes it possible to read sub-code date intermittently.
During this mode, the PWM waveform of phase servo loop (PHPW) does not change.

(3) Generation for information signal of the drum rotary phase

LSWP, RFW signals are generated. These signals are sent to the SP-13 board.

3. CXA1046 (IC108) and its peripheral circuit

During the assemble recording in DAT, the recording is performed based on the drum PG. During the post-recording, it acknowledges the position from ATF patter recorded on the tape to the head and generate the timing. Reproduced RF signal is equalized by IC108 and transformed to ATF SYNC signal as its limiter output.
This signal is sent to SP-13 board to generate the timing to flow recording current.

SECTION B
CIRCUIT BOARD DIAGRAMS

AC-104 BOARD (PCM-7050)
(1-637-275-11)
Component Side

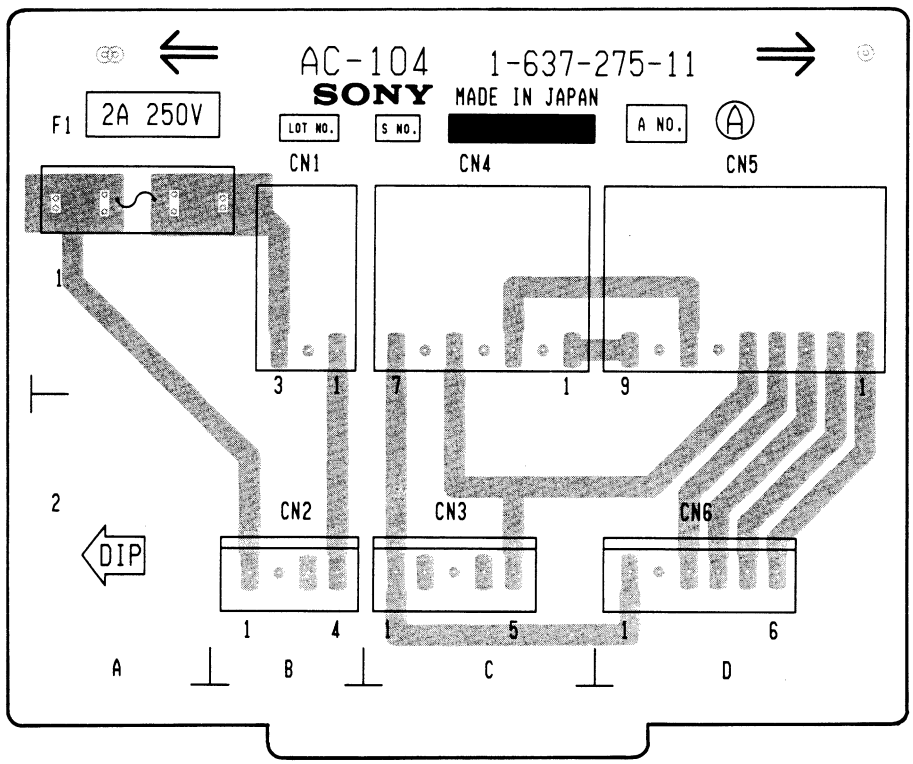

SOLDER SIDE PATTERN 1-637-276-11

ADA-18 ADA-18

ADA-18 BOARD (PCM-7050)
(1-637-267-11)
Component Side

Serial No. UC 20001 to 20015
EK 50001 to 50035

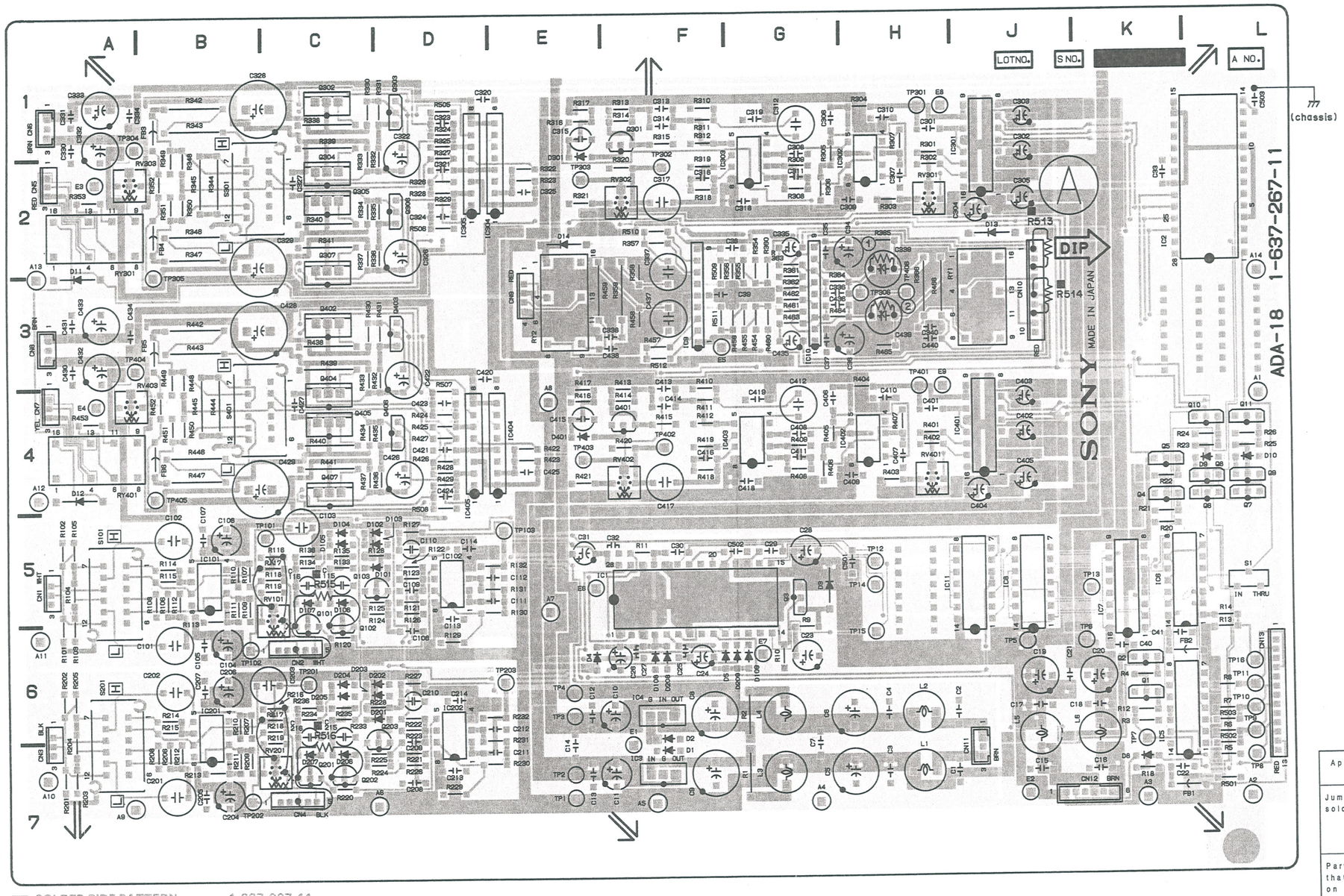

SOLDER SIDE PATTERN 1-637-267-11

Applied Serial No. UC 20001 to 20015 EK 50001 to 50035		
Jumpers that have been soldered or cut.	(Component Side) RV101-2 ⤫ Q101-D RV201-2 ⤫ Q201-D C503 —— GND(chassis)	(Solder Side) R116 ⤫ R117 Q1 R216 ⤫ R217 Q2 RV101-1 ⤫ CN2-3 RV RV201-1 ⤫ CN4-3 RV RV
Parts marked with * that have been installed on the solder side.	* R513 * R514 * R515 * R516	
Parts that have been changed.	C339 → ① 0Ω C439 → ② 0Ω	

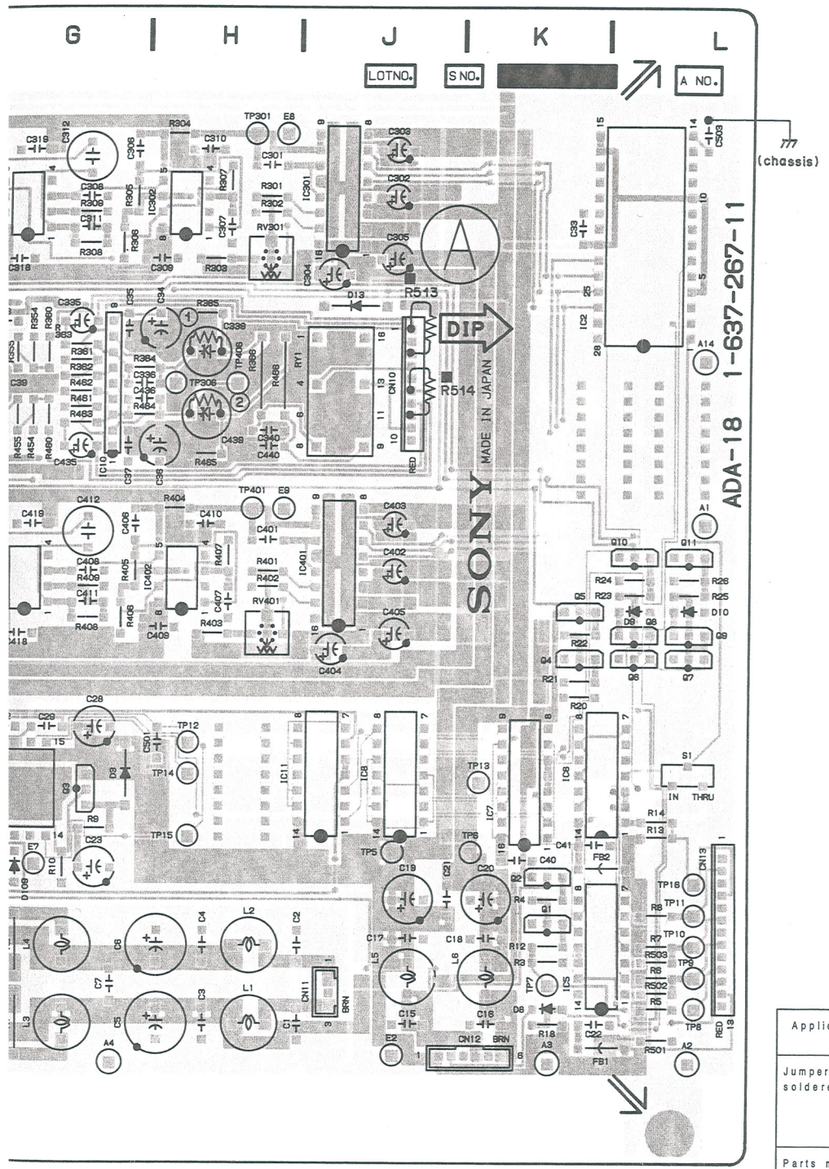

B-7(a)

D1	F-7	IC5	K-7	Q402	C-3	TP305	B-3
D2	F-7	IC6	K-5	Q403	D-3	TP306	H-3
D3	G-5	IC7	K-5	Q404	C-3	TP401	H-3
D4	E-6	IC8	J-5	Q405	C-4	TP402	F-4
D5	F-6	IC9	F-3	Q406	D-4	TP403	E-4
D8	K-7	IC10	G-3	Q407	C-4	TP404	B-3
D9	L-4	IC11	H-5			TP405	B-4
D10	L-4	IC101	B-5	RV101	C-5	TP406	H-3
D11	A-2	IC102	D-5	RV201	C-7		
D12	A-4	IC201	B-6	RV301	H-2		
D13	J-2	IC202	D-6	RV302	F-2		
D14	E-2	IC301	J-2	RV303	B-2		
D101	D-5	IC302	H-2	RV401	H-4		
D102	C-5	IC303	F-2	RV402	F-4		
D103	D-5	IC304	E-2	RV403	B-3		
D104	C-5	IC305	D-2				
D105	C-5	IC401	J-4	S101	A-5		
D106	C-5	IC402	H-4	S201	A-6		
D107	C-5	IC403	F-4	S301	B-2		
D108	F-6	IC404	E-4	S401	B-4		
D109	G-6	IC405	D-4				
D201	C-6			TP1	E-7		
D202	C-6	Q1	K-6	TP2	E-7		
D203	C-6	Q2	K-6	TP3	E-6		
D204	C-6	Q3	G-5	TP4	E-6		
D205	C-6	Q4	K-4	TP5	J-6		
D206	C-7	Q5	K-4	TP6	K-6		
D207	C-7	Q6	L-5	TP7	K-7		
D208	F-6	Q7	L-5	TP8	L-7		
D209	G-6	Q8	L-4	TP9	L-6		
D301	E-2	Q9	L-4	TP10	L-6		
D401	E-4	Q10	L-4	TP11	L-6		
		Q11	L-4	TP12	H-5		
E1	F-6	Q101	C-5	TP13	K-5		
E2	J-7	Q102	C-6	TP14	H-5		
E3	A-2	Q103	C-5	TP15	H-6		
E4	A-4	Q201	C-7	TP16	L-6		
E5	F-3	Q202	C-7	TP101	C-5		
E6	E-5	Q203	D-6	TP102	B-6		
E7	G-6	Q301	F-1	TP103	E-5		
E8	H-1	Q302	C-1	TP201	C-6		
E9	H-3	Q303	D-1	TP202	B-7		
		Q304	C-2	TP203	E-6		
IC1	F-5	Q305	C-2	TP301	H-1		
IC2	K-2	Q306	D-2	TP302	F-2		
IC3	F-7	Q307	C-2	TP303	E-2		
IC4	F-6	Q401	F-4	TP304	A-1		

Applied Serial No.	UC 20001 to 20015 EK 50001 to 50035
Jumpers that have been soldered or cut.	(Component Side) RV101-2 → Q101-D RV201-2 → Q201-D C503 —— GND(chassis) (Solder Side) R116 → R117 R216 → R217 RV101-1 → CN2-3 RV201-1 → CN4-3 Q101-D —— CN2-3 Q201-D —— CN4-3 RV101-1 —— R116 RV101-2 —— R117 RV201-1 —— R216 RV201-2 —— R217
Parts marked with * that have been installed on the solder side.	* R513 * R514 * R515 * R516
Parts that have been changed.	C339 → ① 0Ω C439 → ② 0Ω

B-8(a)

ADA-18 ADA-18

ADA-18 BOARD (PCM-7050)
(1-637-267-12)
Component Side

Serial No. UC 20016 to 20035
EK 50036 to 50115

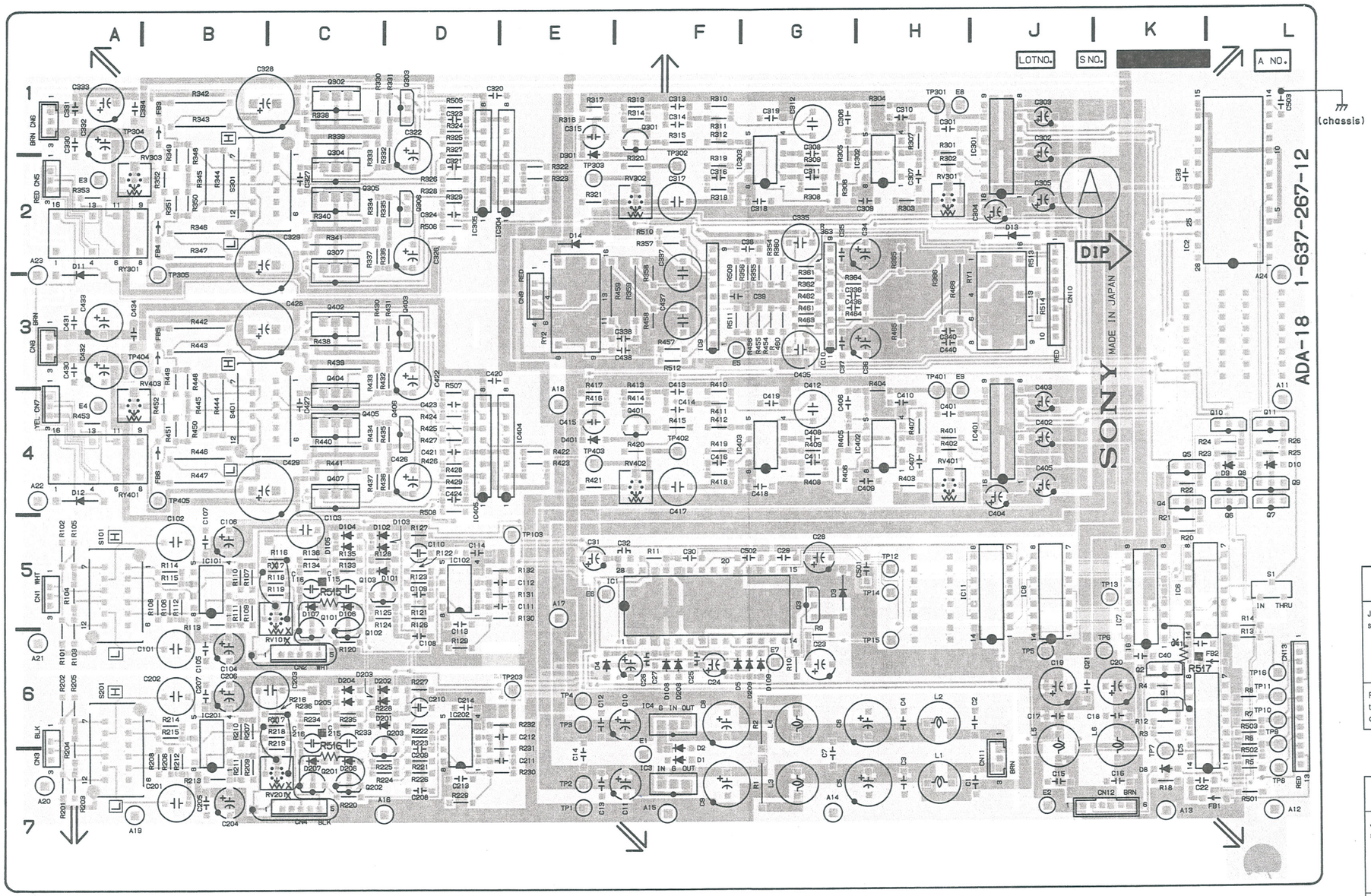

SOLDER SIDE PATTERN 1-637-267-12

Applied Serial No. UC 20016 to 20025 EK 50036 to 50065		
Jumpers that have been soldered or cut.	(Component Side) RV101-2 ✕ Q101-D RV201-2 ✕ Q201-D C503 —— GND(chassis)	(Solder Side) R116 ✕ R117 R216 ✕ R217 RV101-1 ✕ CN2-3 RV201-1 ✕ CN4-3
Parts marked with ▪ that have been installed on the solder side.	▪ R515 ▪ R516	

Applied Serial No. UC 20026 to 20035 EK 50066 to 50115		
Jumpers that have been soldered or cut.	(Component Side) RV101-2 ✕ Q101-D RV201-2 ✕ Q201-D	(Solder Side) IC5-10 ✕ IC7-2 R116 ✕ R117 R216 ✕ R217 RV101-1 ✕ CN2-3 RV201-1 ✕ CN4-3
Parts marked with ▪ that have been installed on the solder side.	▪ R515 ▪ R516 ▪ R517	

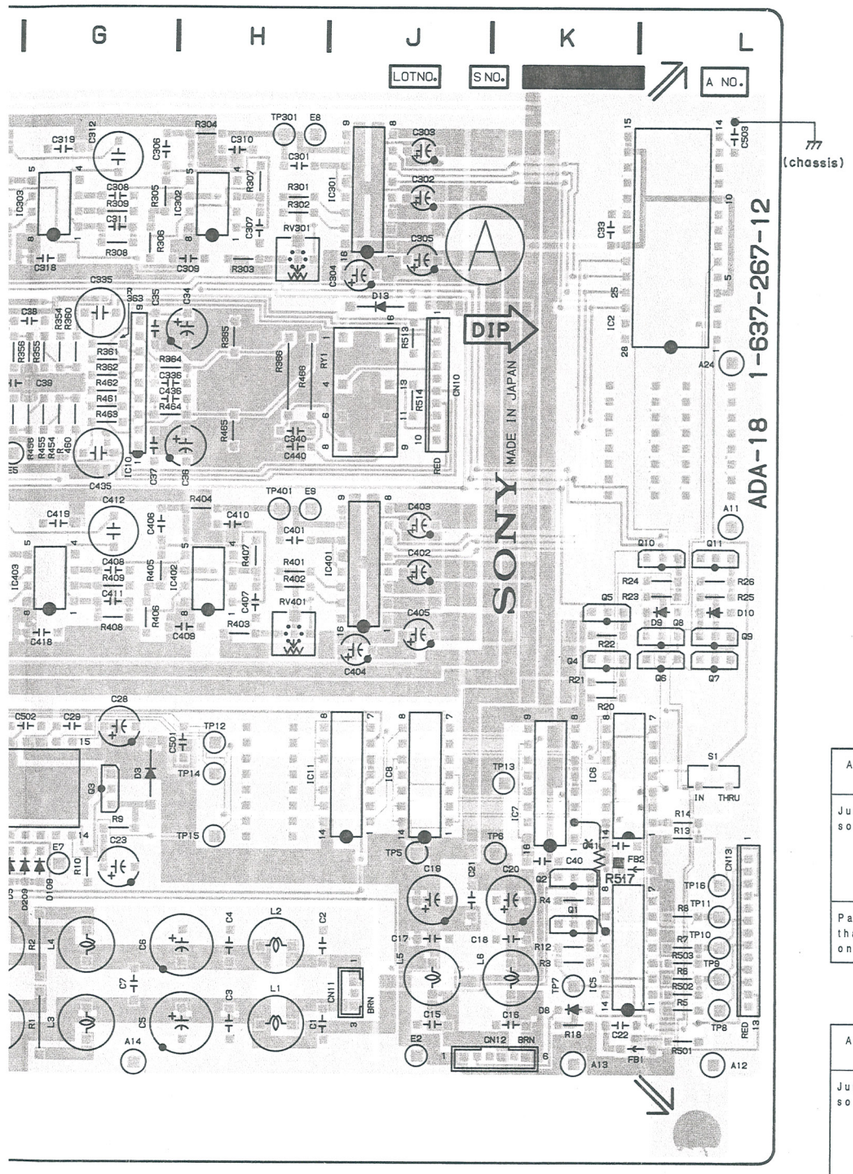

Applied Serial No. UC 20016 to 20025 EK 50036 to 50065			
Jumpers that have been soldered or cut.	{Component Side} RV101-2 ⟋ Q101-D RV201-2 ⟋ Q201-D C503 —— GND(chassis)	{Solder Side} R116 ⟋ R117 R216 ⟋ R217 RV101-1 ⟋ CN2-3 RV201-1 ⟋ CN4-3	Q101-D —— TP102 Q201-D —— TP202 RV101-1 —— R116 RV101-2 —— R117 RV201-1 —— R216 RV201-2 —— R217
Parts marked with * that have been installed on the solder side.	* R515 * R516		

Applied Serial No. UC 20026 to 20035 EK 50066 to 50115			
Jumpers that have been soldered or cut.	{Component Side} RV101-2 ⟋ Q101-D RV201-2 ⟋ Q201-D	{Solder Side} IC5-10 ⟋ IC7-2 R116 ⟋ R117 R216 ⟋ R217 RV101-1 ⟋ CN2-3 RV201-1 ⟋ CN4-3	Q101-D —— TP102 Q201-D —— TP202 RV101-1 —— R116 RV101-2 —— R117 RV201-1 —— R216 RV201-2 —— R217
Parts marked with * that have been installed on the solder side.	* R515 * R516 * R517		

D1	F-7	IC5	K-7	Q402	C-3	TP404	B-3
D2	F-7	IC6	K-5	Q403	D-3	TP405	B-4
D3	G-5	IC7	K-5	Q404	C-3		
D4	E-6	IC8	J-5	Q405	C-4		
D5	F-6	IC9	F-3	Q406	D-4		
D8	K-7	IC10	G-3	Q407	C-4		
D9	L-4	IC11	H-5				
D10	L-4	IC101	B-5	RV101	C-5		
D11	A-2	IC102	D-5	RV201	C-7		
D12	A-4	IC201	B-6	RV301	H-2		
D13	J-2	IC202	D-6	RV302	F-2		
D14	E-2	IC301	J-2	RV303	B-2		
D101	D-5	IC302	H-2	RV401	H-4		
D102	C-5	IC303	F-2	RV402	F-4		
D103	D-5	IC304	E-2	RV403	B-3		
D104	C-5	IC305	D-2				
D105	C-5	IC401	J-4	S101	A-5		
D106	C-5	IC402	H-4	S201	A-6		
D107	C-5	IC403	F-4	S301	B-2		
D108	F-6	IC404	E-4	S401	B-4		
D109	G-6	IC405	D-4				
D201	C-6			TP1	E-7		
D202	C-6	Q1	K-6	TP2	E-7		
D203	C-6	Q2	K-6	TP3	E-6		
D204	C-6	Q3	G-5	TP4	E-6		
D205	C-6	Q4	K-4	TP5	J-6		
D206	C-7	Q5	K-4	TP6	K-6		
D207	C-7	Q6	L-5	TP7	K-7		
D208	F-6	Q7	L-5	TP8	L-7		
D209	G-6	Q8	L-4	TP9	L-6		
D301	E-2	Q9	L-4	TP10	L-6		
D401	E-4	Q10	L-4	TP11	L-6		
		Q11	L-4	TP12	H-5		
E1	F-6	Q101	C-5	TP13	K-5		
E2	J-7	Q102	C-6	TP14	H-5		
E3	A-2	Q103	C-5	TP15	H-6		
E4	A-4	Q201	C-7	TP16	L-6		
E5	F-3	Q202	C-7	TP103	E-5		
E6	E-5	Q203	D-6	TP203	E-6		
E7	G-6	Q301	F-1	TP301	H-1		
E8	H-1	Q302	C-1	TP302	F-2		
E9	H-3	Q303	D-1	TP303	E-2		
		Q304	C-2	TP304	A-1		
IC1	F-5	Q305	C-2	TP305	B-3		
IC2	K-2	Q306	D-2	TP401	H-3		
IC3	F-7	Q307	C-2	TP402	F-4		
IC4	F-6	Q401	F-4	TP403	E-4		

ADA-18 BOARD (PCM-7050)
(1-637-267-14)
Component Side

Serial No. UC 20036 to 25010
EK 50116 to 55110

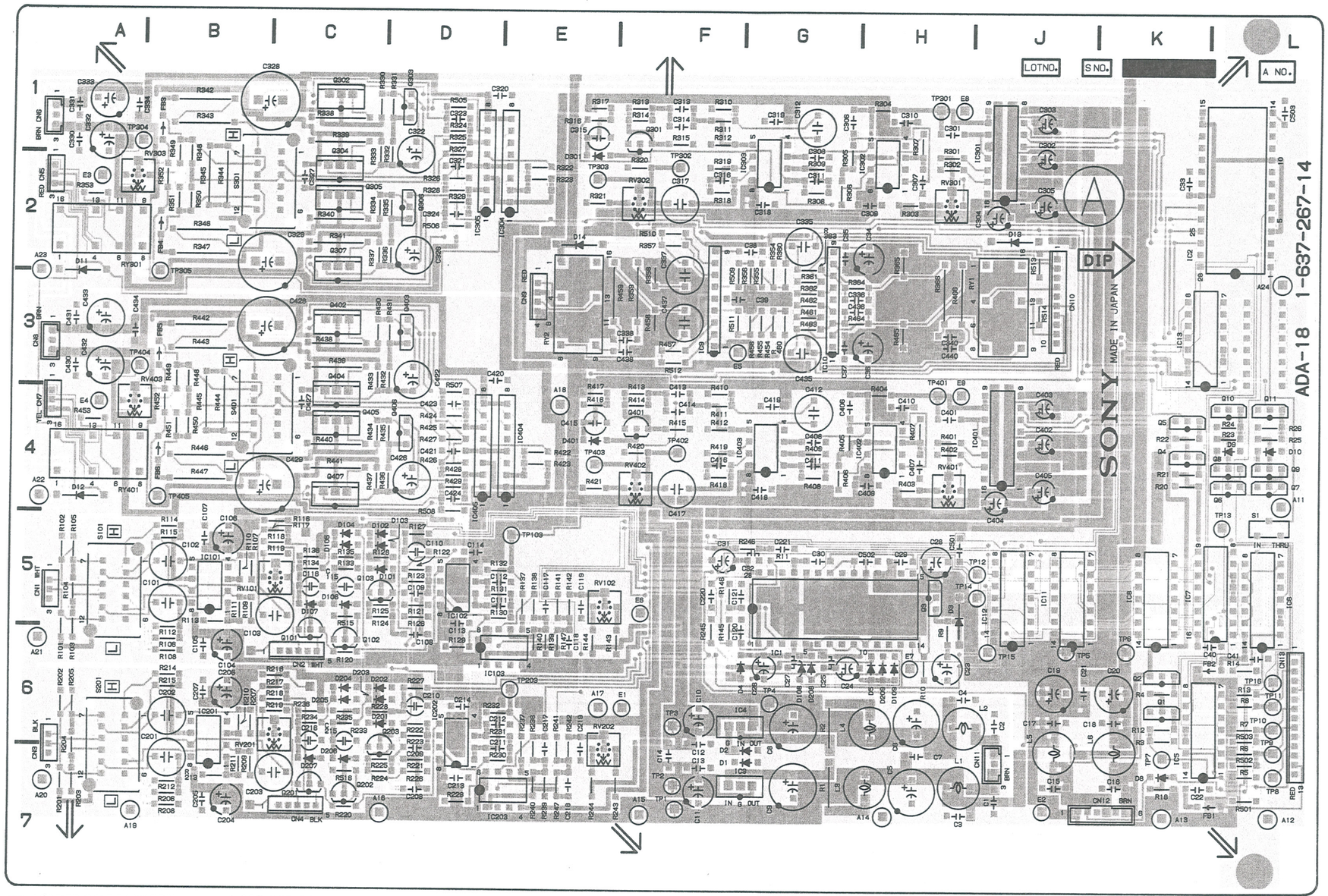

SOLDER SIDE PATTERN 1-637-267-14

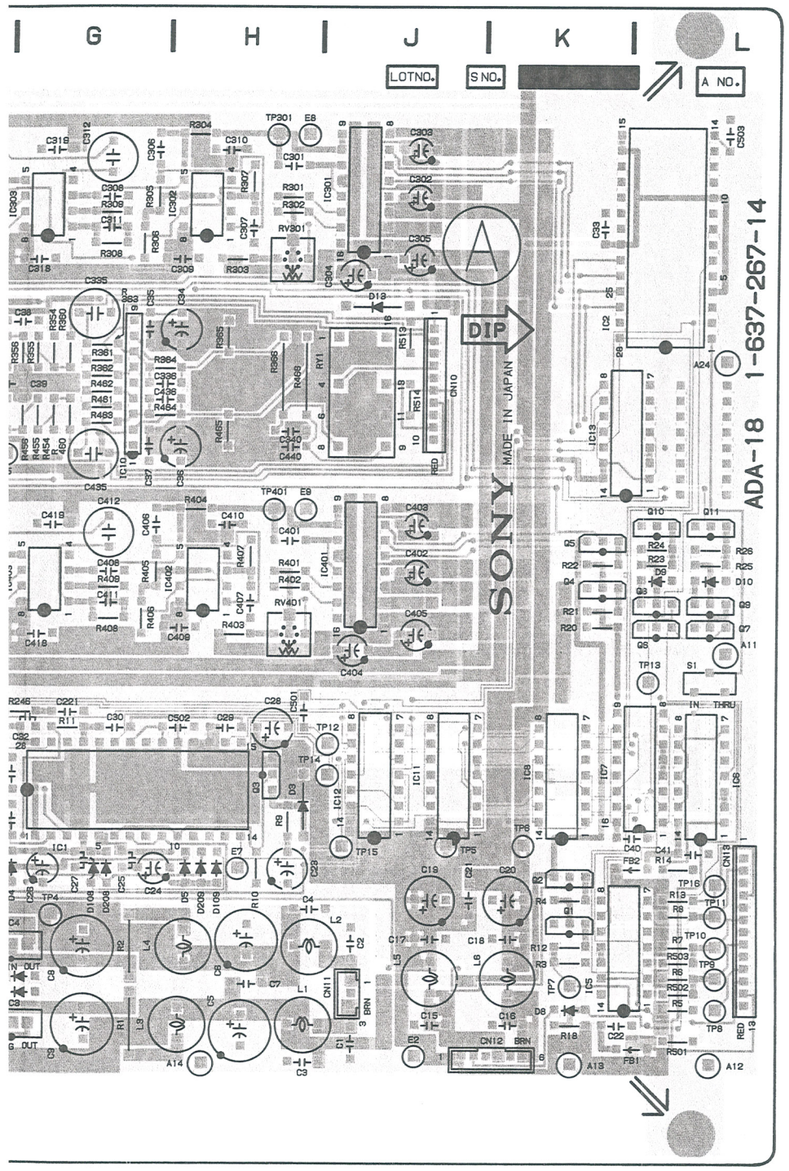

D1	F-7	IC5	K-7	Q402	C-3	TP404	B-3
D2	F-7	IC6	K-5	Q403	D-3	TP405	B-4
D3	G-5	IC7	K-5	Q404	C-3		
D4	E-6	IC8	J-5	Q405	C-4		
D5	F-6	IC9	F-3	Q406	D-4		
D8	K-7	IC10	G-3	Q407	C-4		
D9	L-4	IC11	H-5				
D10	L-4	IC101	B-5	RV101	C-5		
D11	A-2	IC102	D-5	RV201	C-7		
D12	A-4	IC201	B-6	RV301	H-2		
D13	J-2	IC202	D-6	RV302	F-2		
D14	E-2	IC301	J-2	RV303	B-2		
D101	D-5	IC302	H-2	RV401	H-4		
D102	C-5	IC303	F-2	RV402	F-4		
D103	D-5	IC304	E-2	RV403	B-3		
D104	C-5	IC305	D-2				
D105	C-5	IC401	J-4	S101	A-5		
D106	C-5	IC402	H-4	S201	A-6		
D107	C-5	IC403	F-4	S301	B-2		
D108	F-6	IC404	E-4	S401	B-4		
D109	G-6	IC405	D-4				
D201	C-6			TP1	E-7		
D202	C-6	Q1	K-6	TP2	E-7		
D203	C-6	Q2	K-6	TP3	E-6		
D204	C-6	Q3	G-5	TP4	E-6		
D205	C-6	Q4	K-4	TP5	J-6		
D206	C-7	Q5	K-4	TP6	K-6		
D207	C-7	Q6	L-5	TP7	K-7		
D208	F-6	Q7	L-5	TP8	L-7		
D209	G-6	Q8	L-4	TP9	L-6		
D301	E-2	Q9	L-4	TP10	L-6		
D401	E-4	Q10	L-4	TP11	L-6		
		Q11	L-4	TP12	H-5		
E1	F-6	Q101	C-5	TP13	K-5		
E2	J-7	Q102	C-6	TP14	H-5		
E3	A-2	Q103	C-5	TP15	H-6		
E4	A-4	Q201	C-7	TP16	L-6		
E5	F-3	Q202	C-7	TP103	E-5		
E6	E-5	Q203	D-6	TP203	E-6		
E7	G-6	Q301	F-1	TP301	H-1		
E8	H-1	Q302	C-1	TP302	F-2		
E9	H-3	Q303	D-1	TP303	E-2		
		Q304	C-2	TP304	A-1		
IC1	F-5	Q305	C-2	TP305	B-3		
IC2	K-2	Q306	D-2	TP401	H-3		
IC3	F-7	Q307	C-2	TP402	F-4		
IC4	F-6	Q401	F-4	TP403	E-4		

ADA-18 ADA-18

ADA-18 BOARD (PCM-7050)
(1-637-267-15)
Component Side

Serial No. UC 25011 and higher
EK 55111 and higher

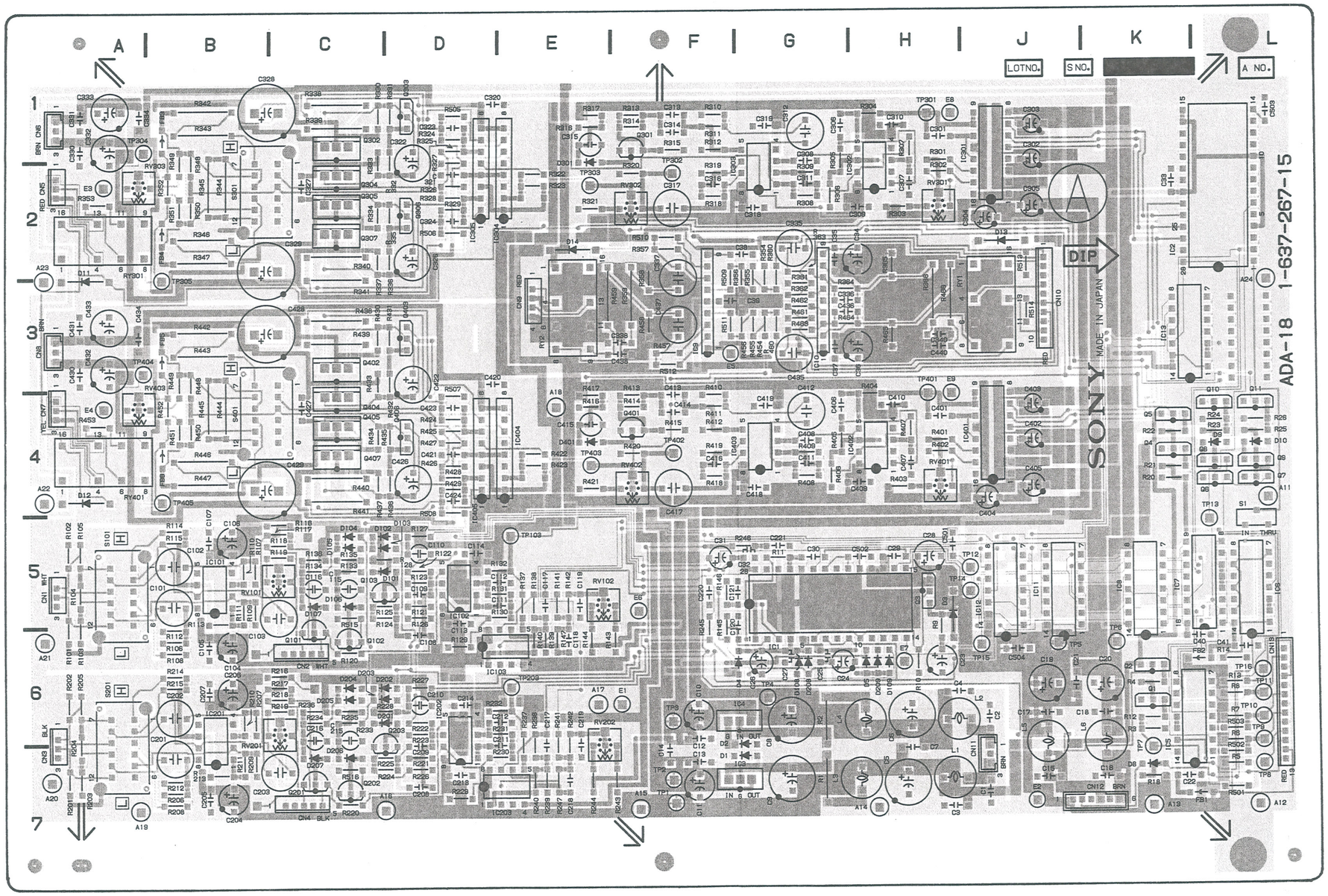

SOLDER SIDE PATTERN 1-637-267-15
COMPONENT SIDE PATTERN 1-637-267-15

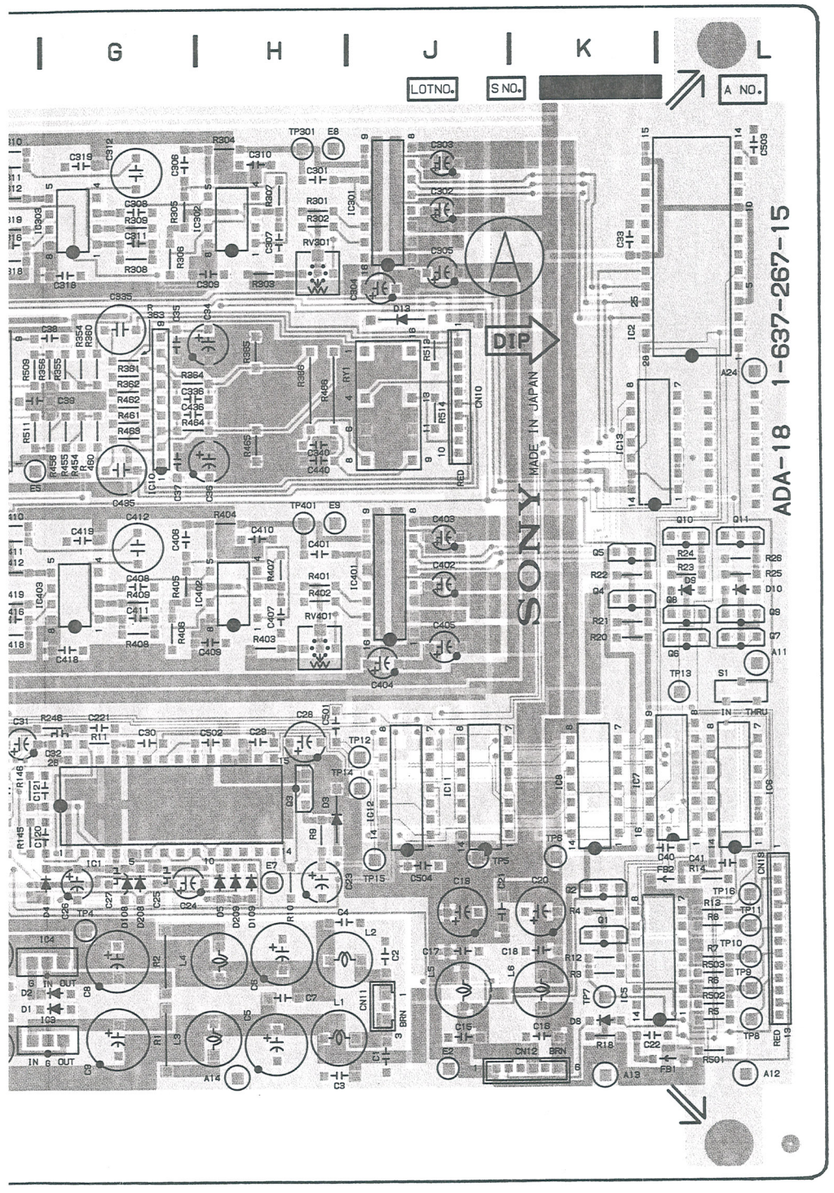

D1	F-7	IC5	K-7	Q305	C-2	TP302	F-2
D2	F-7	IC6	L-5	Q306	D-2	TP303	E-2
D3	H-5	IC7	K-5	Q307	C-2	TP304	A-1
D4	F-6	IC8	K-5	Q401	F-4	TP305	B-3
D5	H-6	IC9	F-3	Q402	C-3	TP401	H-3
D8	K-7	IC10	G-3	Q403	D-3	TP402	F-4
D9	L-4	IC11	H-5	Q404	C-3	TP403	E-4
D10	L-4	IC12	H-5	Q405	C-4	TP404	B-3
D11	A-2	IC13	K-3	Q406	D-4	TP405	B-4
D12	A-4	IC101	B-5	Q407	C-4		
D13	J-2	IC102	D-5				
D14	E-2	IC103	E-6	RV101	C-5		
D101	D-5	IC201	B-6	RV102	E-5		
D102	C-5	IC202	D-6	RV201	C-7		
D103	D-5	IC203	E-7	RV202	E-7		
D104	C-5	IC301	J-2	RV301	H-2		
D105	C-5	IC302	H-2	RV302	F-2		
D106	C-5	IC303	G-2	RV303	B-2		
D107	C-5	IC304	E-2	RV401	H-4		
D108	G-6	IC305	D-2	RV402	F-4		
D109	H-6	IC401	J-4	RV403	B-3		
D201	C-6	IC402	H-4				
D202	C-6	IC403	G-4	S1	L-5		
D203	C-6	IC404	E-4	S101	A-5		
D204	C-6	IC405	D-4	S201	A-6		
D205	C-6			S301	B-2		
D206	C-7	Q1	K-6	S401	B-4		
D207	C-7	Q2	K-6				
D208	G-6	Q3	H-5	TP1	F-7		
D209	H-6	Q4	K-4	TP2	F-7		
D301	E-2	Q5	K-4	TP3	F-6		
D401	E-4	Q6	L-4	TP4	G-6		
		Q7	L-4	TP5	J-6		
E1	F-6	Q8	L-4	TP6	K-6		
E2	J-7	Q9	L-4	TP7	K-7		
E3	A-2	Q10	L-4	TP8	L-7		
E4	A-4	Q11	L-4	TP9	L-6		
E5	F-3	Q101	C-5	TP10	L-6		
E6	F-5	Q102	C-6	TP11	L-6		
E7	H-6	Q103	C-5	TP12	H-5		
E8	H-1	Q201	C-7	TP13	L-5		
E9	H-3	Q202	C-7	TP14	H-5		
		Q203	D-6	TP15	J-6		
IC1	G-5	Q301	F-1	TP16	L-6		
IC2	K-2	Q302	C-1	TP103	E-5		
IC3	F-7	Q303	D-1	TP203	E-6		
IC4	F-6	Q304	C-2	TP301	H-1		

CP-157A BOARD (PCM-7050)
(1-637-277-11)
Component Side

Serial No. UC 20001 to 20025
EK 50001 to 50065

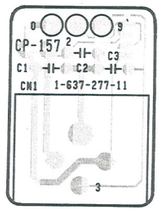

SOLDER SIDE PATTERN 1-637-277-11

CP-158 BOARD (PCM-7050)
(1-637-282-12)
Component Side

Serial No. UC 20001 to 20025
EK 50001 to 50065

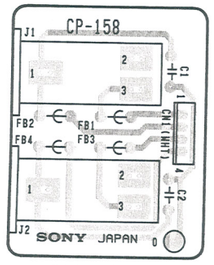

SOLDER SIDE PATTERN 1-637-282-12

CP-172A BOARD (PCM-7050)
(1-637-280-11)
Component Side

Serial No. UC 20001 to 20025
EK 50001 to 50065

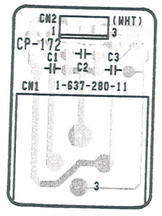

SOLDER SIDE PATTERN 1-637-280-11

CP-172B BOARD (PCM-7050)
(1-637-281-11)
Component Side

Serial No. UC 20001 to 20025
EK 50001 to 50065

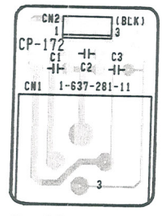

SOLDER SIDE PATTERN 1-637-281-11

CP-171 BOARD (PCM-7050)
(1-637-276-13)
Component Side

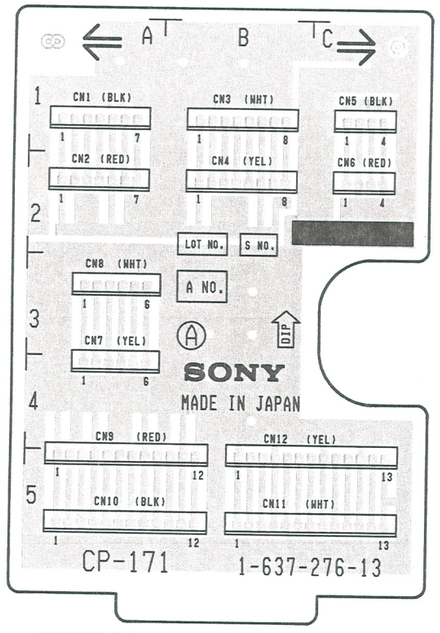

SOLDER SIDE PATTERN 1-637-276-13

CP-173A BOARD (PCM-7050)
(1-637-291-11)
Component Side

Serial No. UC 20001 to 20025
EK 50001 to 50065

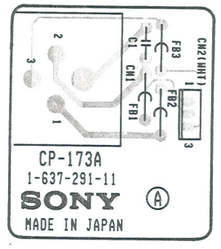

SOLDER SIDE PATTERN 1-637-291-11

CP-173B BOARD (PCM-7050)
(1-637-292-11)
Component Side

Serial No. UC 20001 to 20025
EK 50001 to 50065

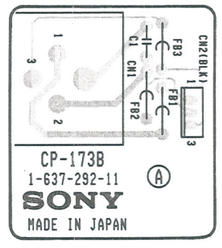

SOLDER SIDE PATTERN 1-637-292-11

CP-157A BOARD (PCM-7050)
(1-637-277-13)
Component Side

Serial No. UC 20026 and higher
EK 50066 and higher

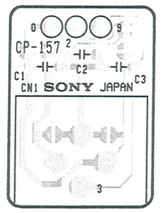

SOLDER SIDE PATTERN 1-637-277-13

CP-158 BOARD (PCM-7050)
(1-637-282-14)
Component Side

Serial No. UC 20026 and higher
EK 50066 and higher

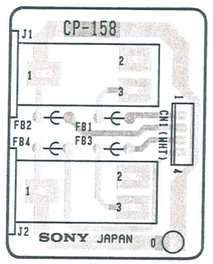

SOLDER SIDE PATTERN 1-637-282-14

CP-172A BOARD (PCM-7050)
(1-637-280-13)
Component Side

Serial No. UC 20026 and higher
EK 50066 and higher

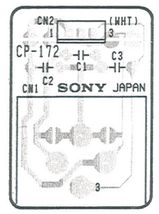

SOLDER SIDE PATTERN 1-637-280-13

CP-172B BOARD (PCM-7050)
(1-637-281-13)
Component Side

Serial No. UC 20026 and higher
EK 50066 and higher

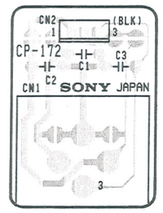

SOLDER SIDE PATTERN 1-637-281-13

CP-171 BOARD (PCM-7050)
(1-637-276-13)
Component Side

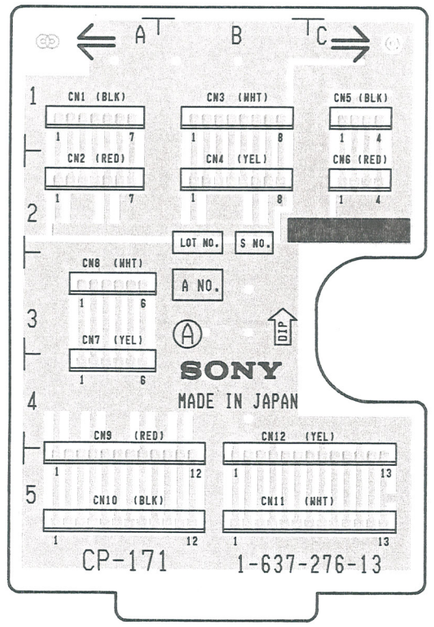

SOLDER SIDE PATTERN 1-637-276-13

CP-173A BOARD (PCM-7050)
(1-637-291-13)
Component Side

Serial No. UC 20026 and higher
EK 50066 and higher

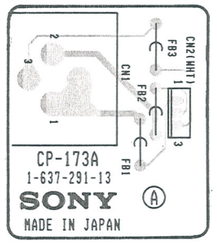

SOLDER SIDE PATTERN 1-637-291-13

CP-173B BOARD (PCM-7050)
(1-637-292-13)
Component Side

Serial No. UC 20026 and higher
EK 50066 and higher

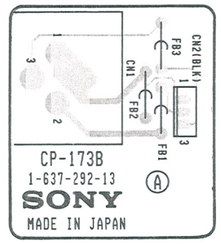

SOLDER SIDE PATTERN 1-637-292-13

CP-249 BOARD (PCM-7050)
(1-650-592-11)
Component Side

Serial No. UC 37001 and higher
EK 57001 and higher

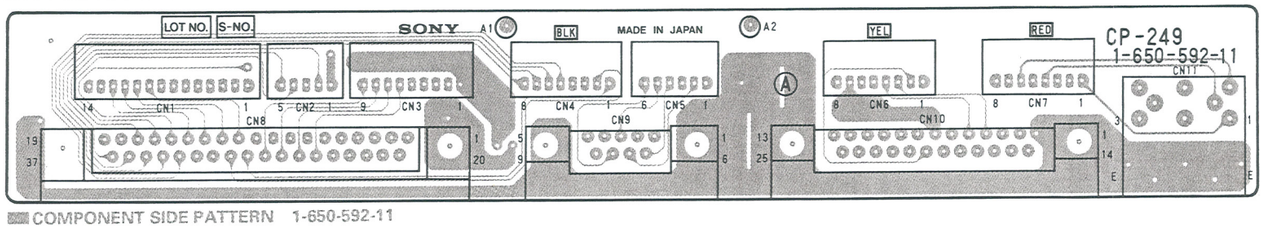

COMPONENT SIDE PATTERN 1-650-592-11

Solder Side

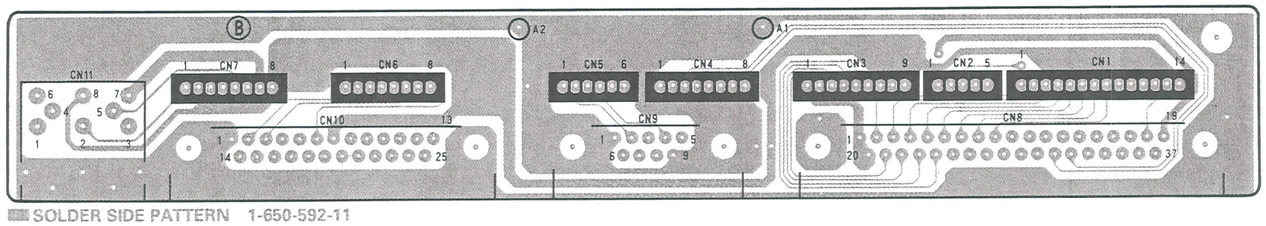

SOLDER SIDE PATTERN 1-650-592-11

CP-250 BOARD (PCM-7050)
(1-650-593-11)
Component Side

Serial No. UC 37001 and higher
EK 57001 and higher

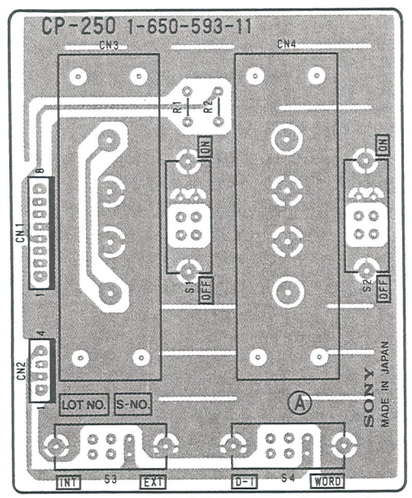

COMPONENT SIDE PATTERN 1-650-593-11

Solder Side

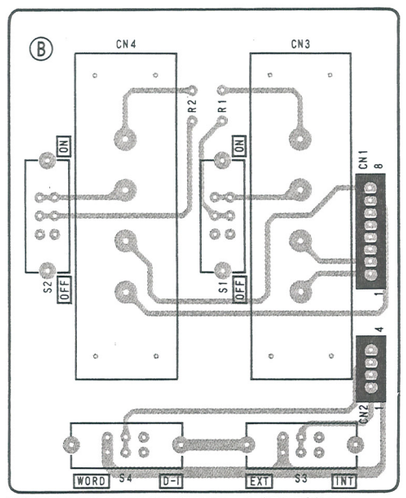

SOLDER SIDE PATTERN 1-650-593-11

CP-251 BOARD (PCM-7050)
(1-650-594-11)
Component Side

Serial No. UC 37001 and higher
EK 57001 and higher

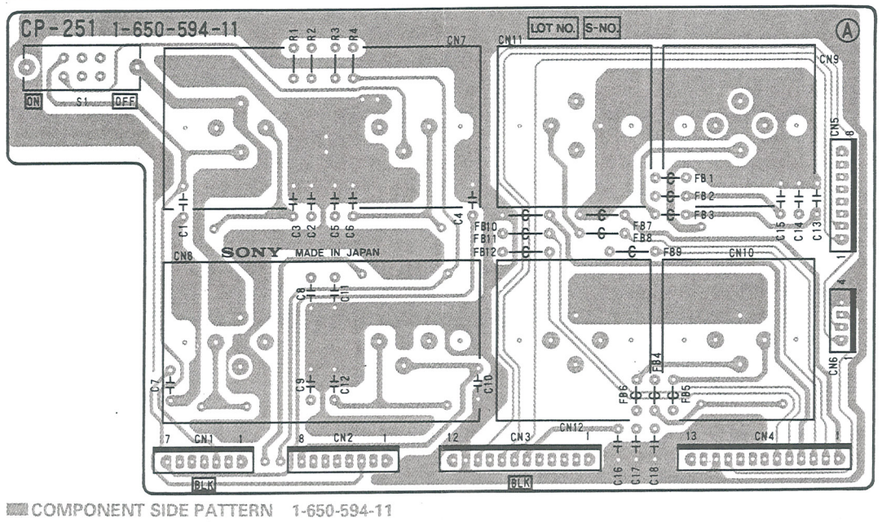

COMPONENT SIDE PATTERN 1-650-594-11

Solder Side

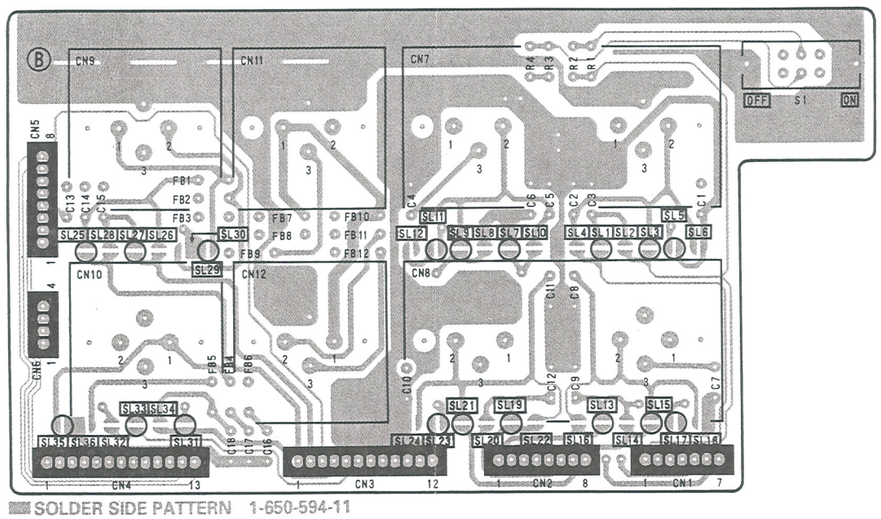

SOLDER SIDE PATTERN 1-650-594-11

CP-251 BOARD (PCM-7050)
(1-650-594-11)
Component Side

Serial No. UC 37001 and higher
EK 57001 and higher

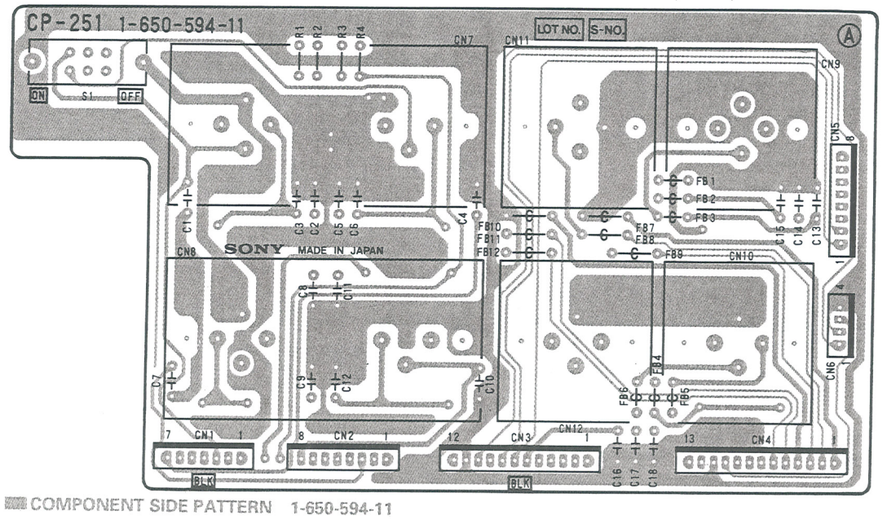

COMPONENT SIDE PATTERN 1-650-594-11

Solder Side

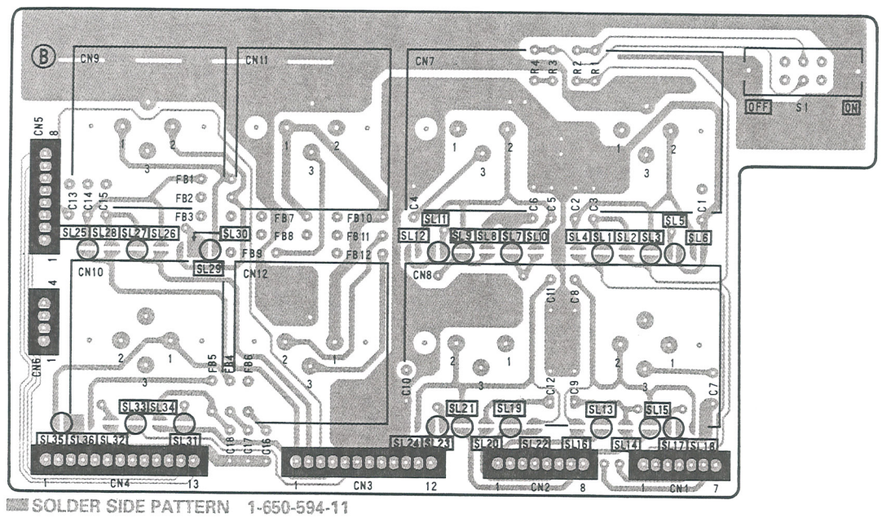

SOLDER SIDE PATTERN 1-650-594-11

CP-256 BOARD (PCM-7050)
(1-651-318-11)
Component Side

Serial No. UC 37001 and higher
EK 57001 and higher

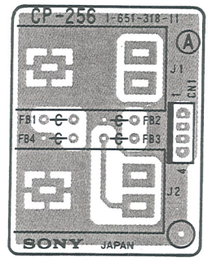

COMPONENT SIDE PATTERN 1-651-318-11

Solder Side

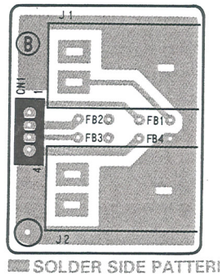

SOLDER SIDE PATTERN 1-651-318-11

CP-171 BOARD (PCM-7050)
(1-647-276-13)
Component Side

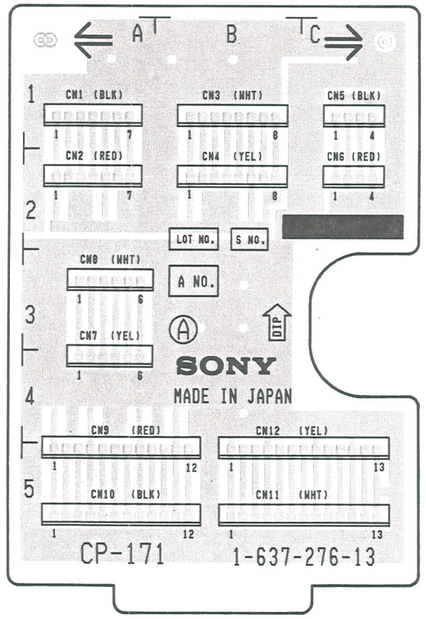

SOLDER SIDE PATTERN 1-637-276-13

DC-47 BOARD (PCM-7050)
(1-637-274-11)
Component Side

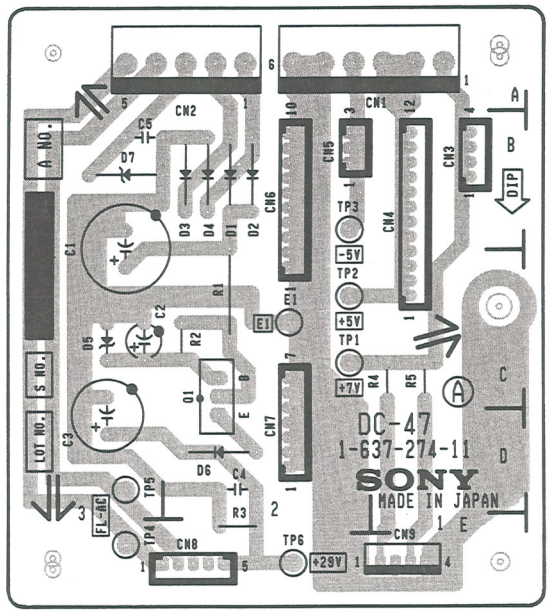

SOLDER SIDE PATTERN 1-637-274-11

D1	B-2
D2	B-2
D3	B-2
D4	B-2
D5	C-3
D6	D-2
D7	B-3
E1	C-2
Q1	C-2
TP1	C-2
TP2	C-2
TP3	B-2
TP4	E-3
TP5	D-3
TP6	E-2

DIO-10 BOARD (PCM-7050)
(1-637-289-12)
Component Side

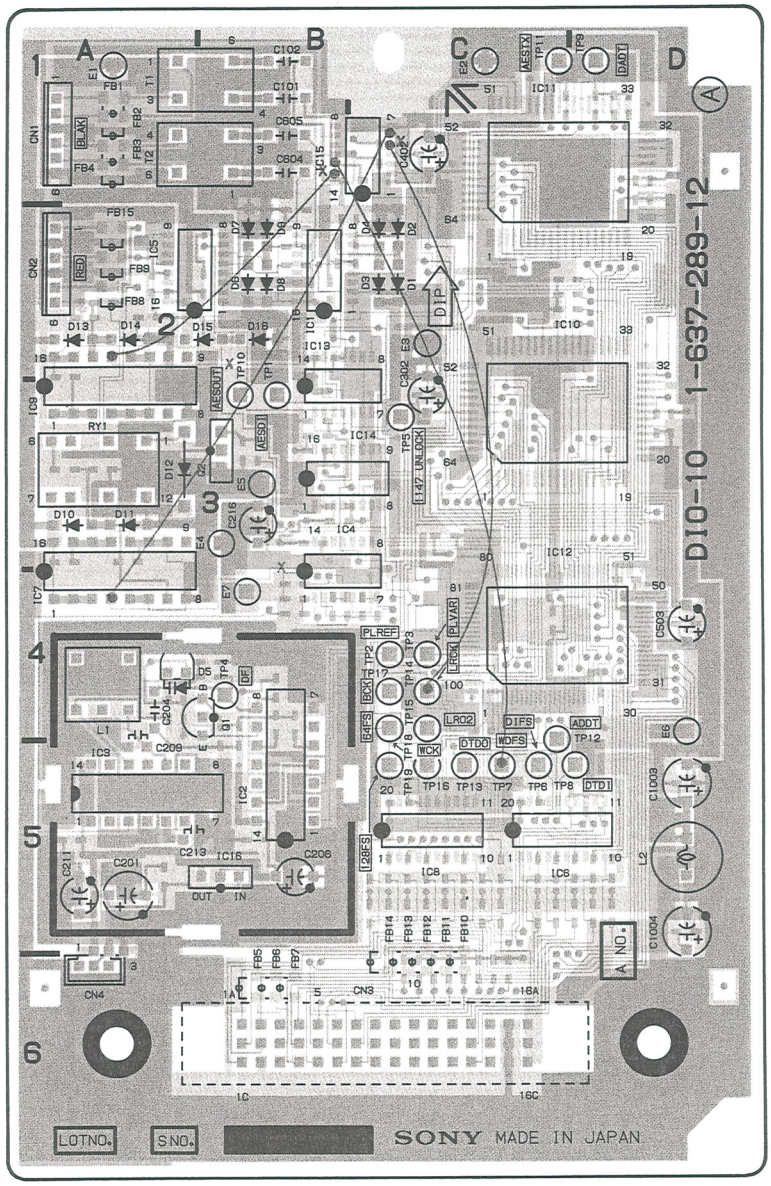

SOLDER SIDE PATTERN 1-637-289-12
COMPONENT SIDE PATTERN 1-637-289-12

D1	C-2	TP3	C-4
D2	C-2	TP4	B-4
D3	C-2	TP5	C-3
D4	C-2	TP6	C-5
D5	A-4	TP7	C-5
D6	B-2	TP8	C-5
D7	B-2	TP9	D-1
D8	B-2	TP10	B-2
D9	B-2	TP11	C-1
D10	A-3	TP12	D-5
D11	A-3	TP13	C-5
D12	A-3	TP14	C-4
D13	A-2	TP15	C-4
D14	A-2	TP16	C-5
D15	A-2	TP17	C-4
D16	B-2	TP18	C-5
		TP19	C-5
E1	A-1		
E2	C-1		
E3	C-2		
E4	B-3		
E5	B-3		
E6	D-4		
E7	B-4		
IC1	B-2		
IC2	B-5		
IC3	A-5		
IC4	B-3		
IC5	A-2		
IC6	C-5		
IC7	A-4		
IC8	C-5		
IC9	A-3		
IC10	C-2		
IC11	C-1		
IC12	C-3		
IC13	B-2		
IC14	C-3		
IC15	B-1		
IC16	B-5		
Q1	B-4		
Q2	B-3		
TP1	B-2		
TP2	C-4		

Applied Serial No.	UC 20001 and higher EK 50001 and higher
Jumpers that have been soldered or cut.	IC7-4 —×— TP14 IC9-13 —×— TP7 IC15-5 —×— GND IC15-13 —×— GND IC7-4 —— IC15-6 IC9-13 —— IC15-13 TP7 —— IC15-12 TP14 —— IC15-5

DIO-10 BOARD (PCM-7050)
(1-637-289-12)
Solder Side

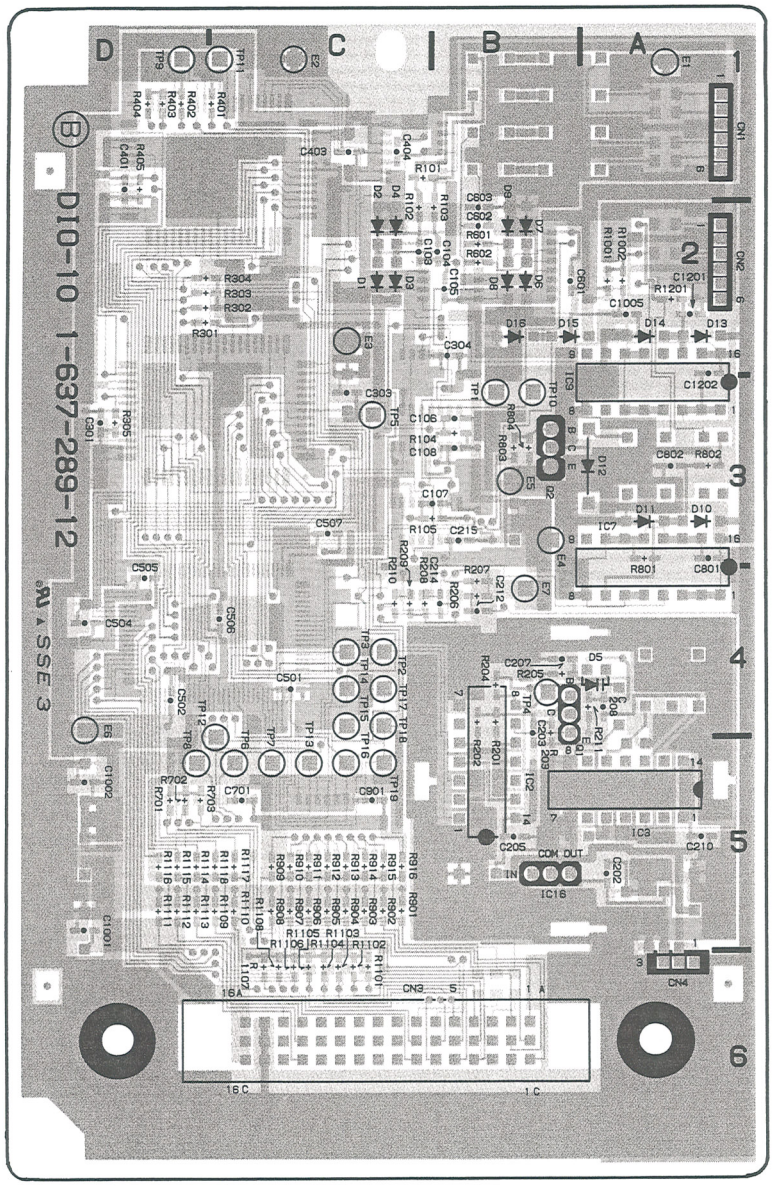

SOLDER SIDE PATTERN 1-637-289-12
COMPONENT SIDE PATTERN 1-637-289-12

D1	C-2	TP3	C-4
D2	C-2	TP4	B-4
D3	C-2	TP5	C-3
D4	C-2	TP6	C-5
D5	A-4	TP7	C-5
D6	B-2	TP8	C-5
D7	B-2	TP9	D-1
D8	B-2	TP10	B-2
D9	B-2	TP11	C-1
D10	A-3	TP12	D-5
D11	A-3	TP13	C-5
D12	A-3	TP14	C-4
D13	A-2	TP15	C-4
D14	A-2	TP16	C-5
D15	A-2	TP17	C-4
D16	B-2	TP18	C-5
		TP19	C-5
E1	A-1		
E2	C-1		
E3	C-2		
E4	B-3		
E5	B-3		
E6	D-4		
E7	B-4		
IC1	B-2		
IC2	B-5		
IC3	A-5		
IC4	B-3		
IC5	A-2		
IC6	C-5		
IC7	A-4		
IC8	C-5		
IC9	A-3		
IC10	C-2		
IC11	C-1		
IC12	C-3		
IC13	B-2		
IC14	C-3		
IC15	B-1		
IC16	B-5		
Q1	B-4		
Q2	B-3		
TP1	B-2		
TP2	C-4		

DR-139 BOARD (PCM-7050)
(1-637-264-11)
Component Side

Serial No. UC 20001 to 20025
EK 50001 to 50065

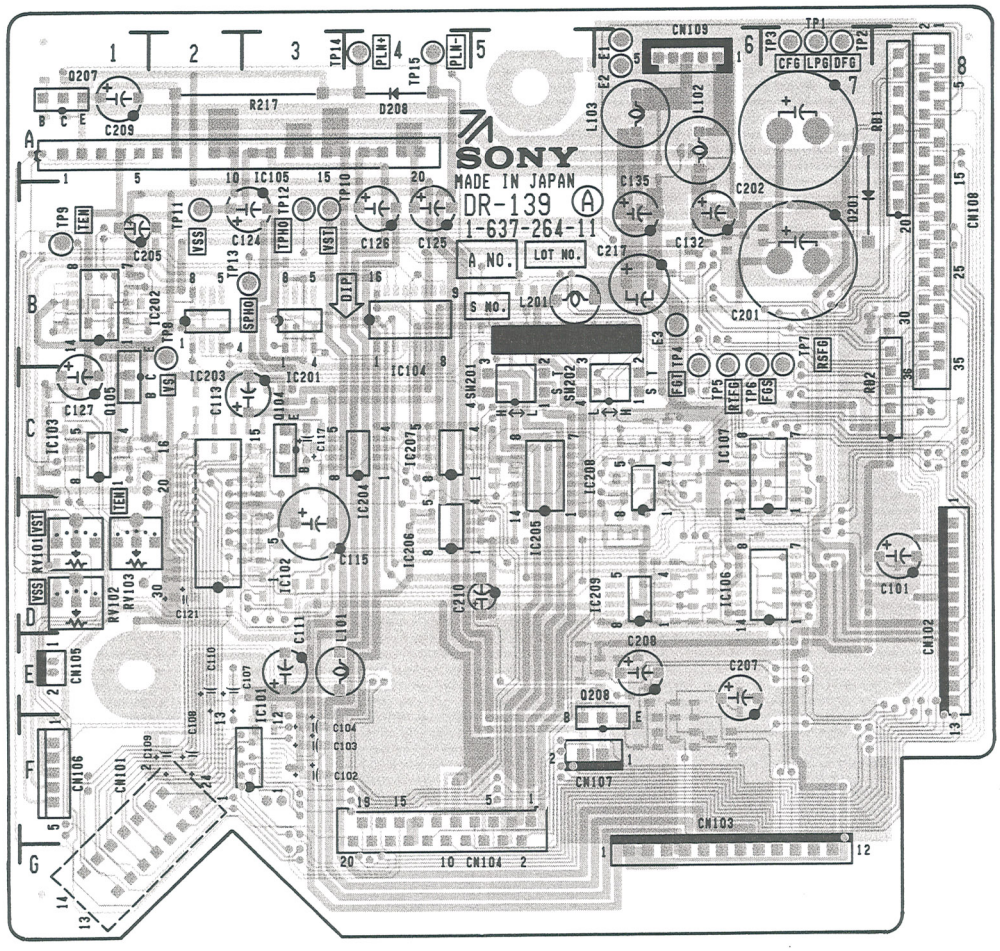

SOLDER SIDE PATTERN 1-637-264-11
COMPONENT SIDE PATTERN 1-637-264-11

D201 B7

IC101 F3
IC102 D3
IC103 C1
IC104 C4
IC105 A3
IC106 D6
IC107 C6
IC201 C3
IC202 B2
IC203 C2
IC204 D4
IC205 D5
IC206 D4
IC207 C4
IC208 C5
IC209 D5

RV101 D1
RV102 D1
RV103 D1

SW201 C5
SW202 C5

TP1 A7
TP2 A7
TP3 A7
TP4 C6
TP5 C6
TP6 C6
TP7 B7
TP8 B2
TP9 B1
TP10 B3
TP11 B2
TP12 B3
TP13 B2
TP14 A3
TP15 A4

HP-48 BOARD (PCM-7050)
(1-637-283-12)
Component Side

Serial No. UC 20001 to 20025
EK 50001 to 50065

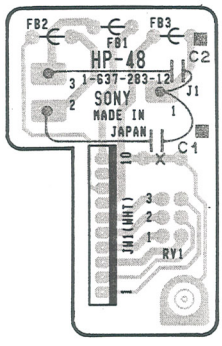

SOLDER SIDE PATTERN 1-637-283-12

Applied Serial No. UC 20001 to 20025 EK 50001 to 50065	
Jumpers that have been cut.	CN1-10 —×— GND
Parts marked with ▪ that have been installed on the solder side.	▪ C1 ▪ C2

DR-139 BOARD (PCM-7050)
(1-637-264-11)
Solder Side

Serial No. UC 20001 to 20025
EK 50001 to 50065

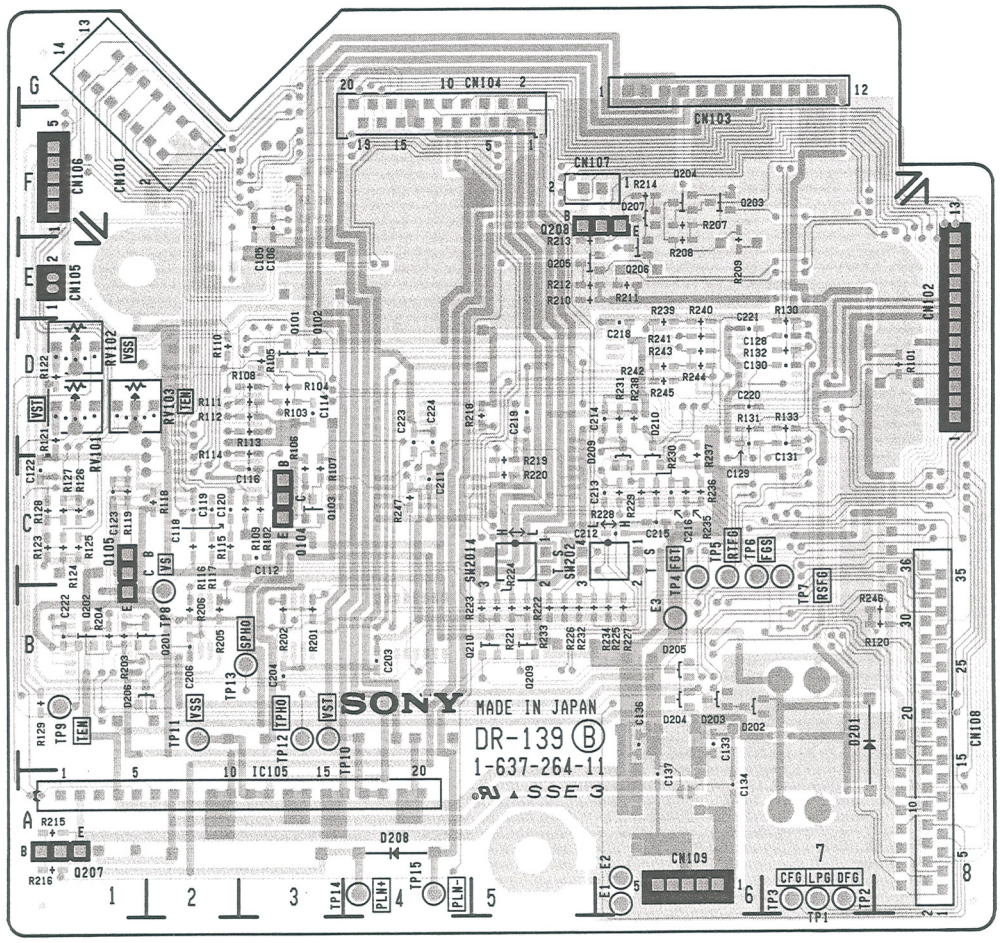

D201	B-7
D208	A-4
IC101	F-3
IC102	D-3
IC103	C-1
IC104	C-4
IC105	A-3
IC106	D-6
IC107	C-6
IC201	C-3
IC202	B-2
IC203	C-2
IC204	D-4
IC205	D-5
IC206	D-4
IC207	C-4
IC208	C-5
IC209	D-5
Q105	C-1
Q208	E-5
RV101	D-1
RV102	D-1
RV103	D-1
SW201	C-5
SW202	C-5
TP1	A-7
TP2	A-7
TP3	A-7
TP4	C-6
TP5	C-6
TP6	C-6
TP7	B-7
TP8	B-2
TP9	B-1
TP10	B-3
TP11	B-2
TP12	B-3
TP13	B-2
TP14	A-3
TP15	A-4

DR-139 BOARD (PCM-7050)
(1-637-264-12)
Component Side

Serial No. UC 20026 to 25080
EK 50066 to 55110

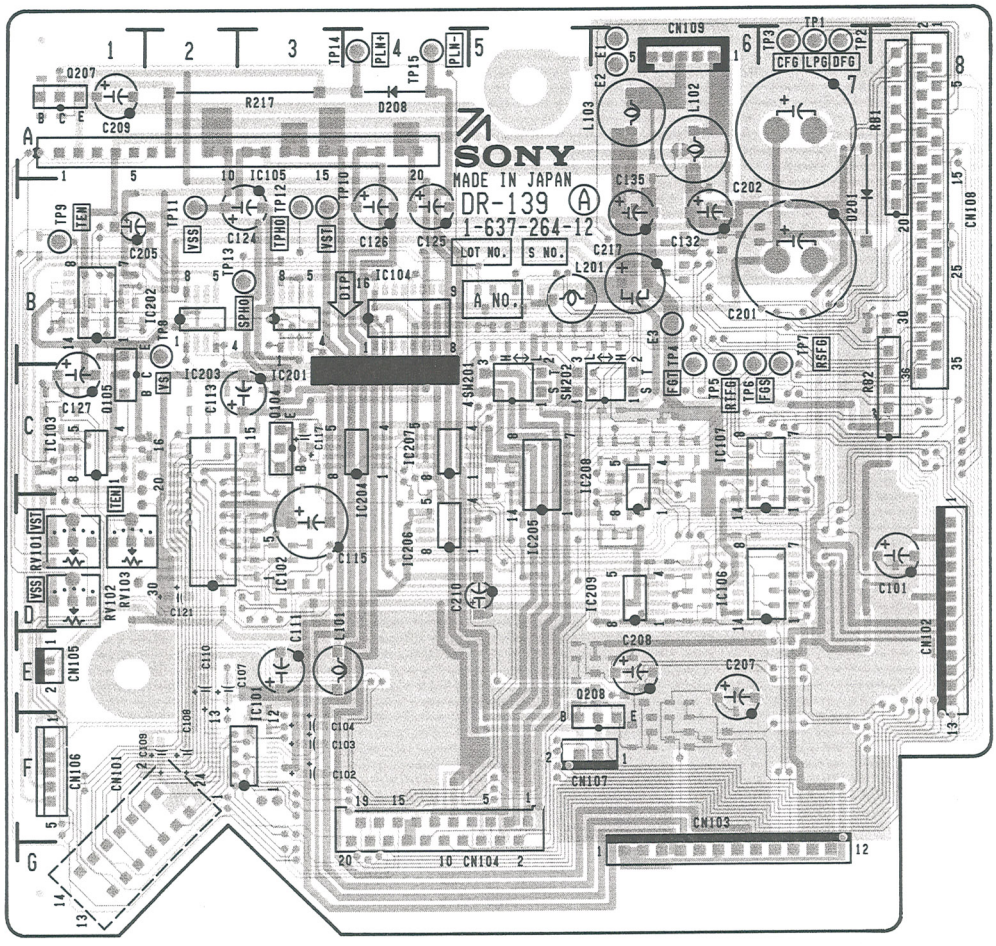

SOLDER SIDE PATTERN 1-637-264-12
COMPONENT SIDE PATTERN 1-637-264-12

D201	B-7
D208	A-4
IC101	F-3
IC102	D-3
IC103	C-1
IC104	C-4
IC105	A-3
IC106	D-6
IC107	C-6
IC201	C-3
IC202	B-2
IC203	C-2
IC204	D-4
IC205	D-5
IC206	D-4
IC207	C-4
IC208	C-5
IC209	D-5
Q105	C-1
Q208	E-5
RV101	D-1
RV102	D-1
RV103	D-1
SW201	C-5
SW202	C-5
TP1	A-7
TP2	A-7
TP3	A-7
TP4	C-6
TP5	C-6
TP6	C-6
TP7	B-7
TP8	B-2
TP9	B-1
TP10	B-3
TP11	B-2
TP12	B-3
TP13	B-2
TP14	A-3
TP15	A-4

HP-48 BOARD (PCM-7050)
(1-637-283-13)
Component Side

Serial No. UC 20026 and higher
EK 50066 and higher

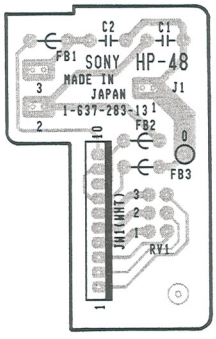

SOLDER SIDE PATTERN 1-637-283-13

DR-139 BOARD (PCM-7050)
(1-637-264-12)
Solder Side

Serial No. UC 20026 to 25080
EK 50066 to 55110

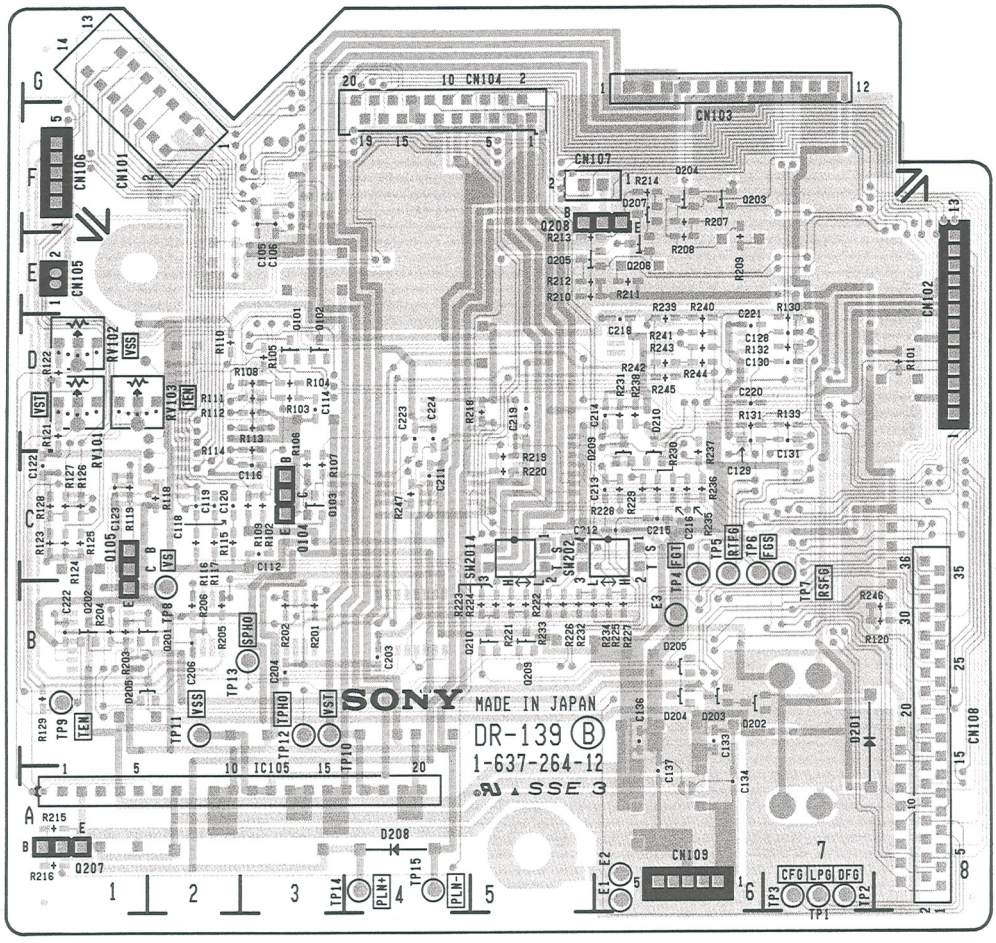

SOLDER SIDE PATTERN 1-637-264-12
COMPONENT SIDE PATTERN 1-637-264-12

D202	B-6
D203	B-6
D204	B-6
D205	B-6
D206	B-1
D207	F-6
D209	C-6
D210	D-6
E1	A-6
E2	A-6
E3	B-6
Q101	D-3
Q102	D-3
Q103	C-3
Q104	C-3
Q201	B-2
Q202	B-1
Q203	F-6
Q204	F-6
Q205	E-5
Q206	E-6
Q207	A-1
Q209	B-5
Q210	B-5

DR-139 BOARD (PCM-7050)
(1-637-264-14)
Component Side

Serial No. UC 25081 and higher
EK 55111 and higher

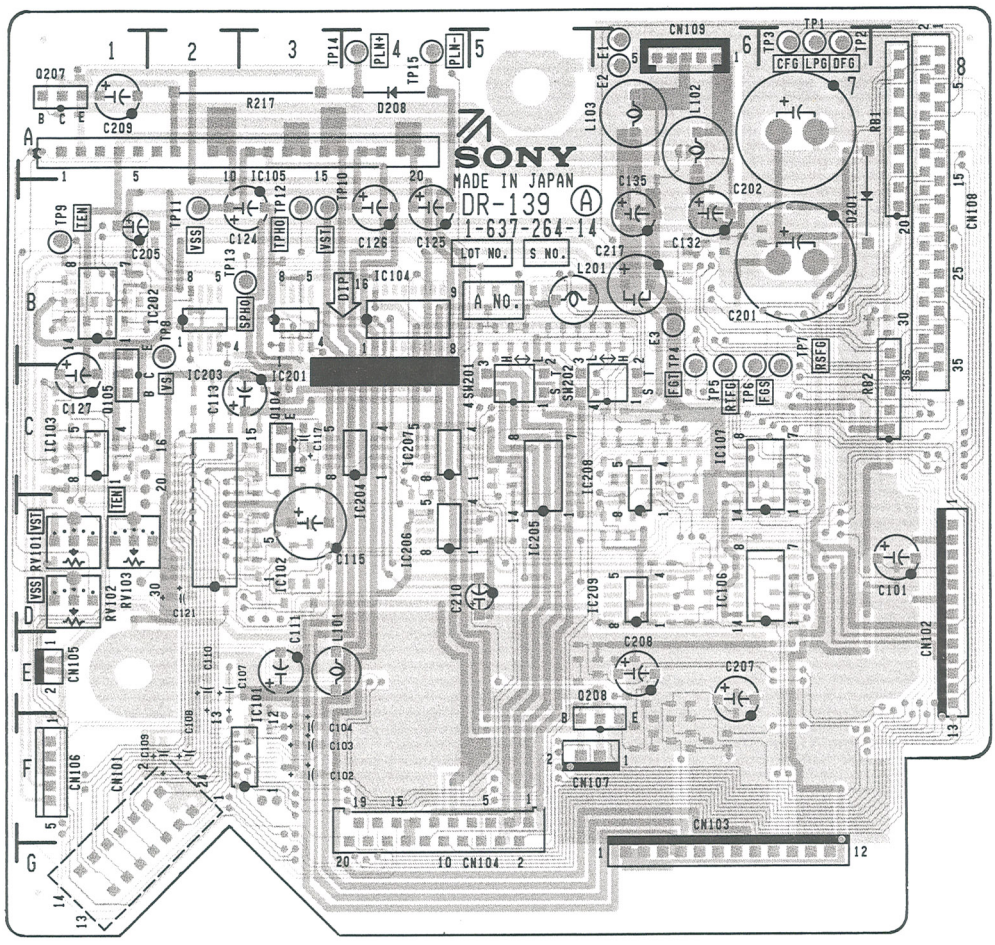

SOLDER SIDE PATTERN 1-637-264-14

COMPONENT SIDE PATTERN 1-637-264-14

D201	B-7
D208	A-4
IC101	F-3
IC102	D-3
IC103	C-1
IC104	C-4
IC105	A-3
IC106	D-6
IC107	C-6
IC201	C-3
IC202	B-2
IC203	C-2
IC204	D-4
IC205	D-5
IC206	D-4
IC207	C-4
IC208	C-5
IC209	D-5
Q105	C-1
Q208	E-5
RV101	D-1
RV102	D-1
RV103	D-1
SW201	C-5
SW202	C-5
TP1	A-7
TP2	A-7
TP3	A-7
TP4	C-6
TP5	C-6
TP6	C-6
TP7	B-7
TP8	B-2
TP9	B-1
TP10	B-3
TP11	B-2
TP12	B-3
TP13	B-2
TP14	A-3
TP15	A-4

HP-48 BOARD (PCM-7050).
(1-637-283-13)
Component Side

Serial No. UC 20026 and higher
EK 50066 and higher

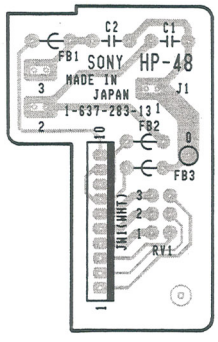

SOLDER SIDE PATTERN 1-637-283-13

DR-139 BOARD (PCM-7050)
(1-637-264-14)
Solder Side

Serial No. UC 25081 and higher
EK 55111 and higher

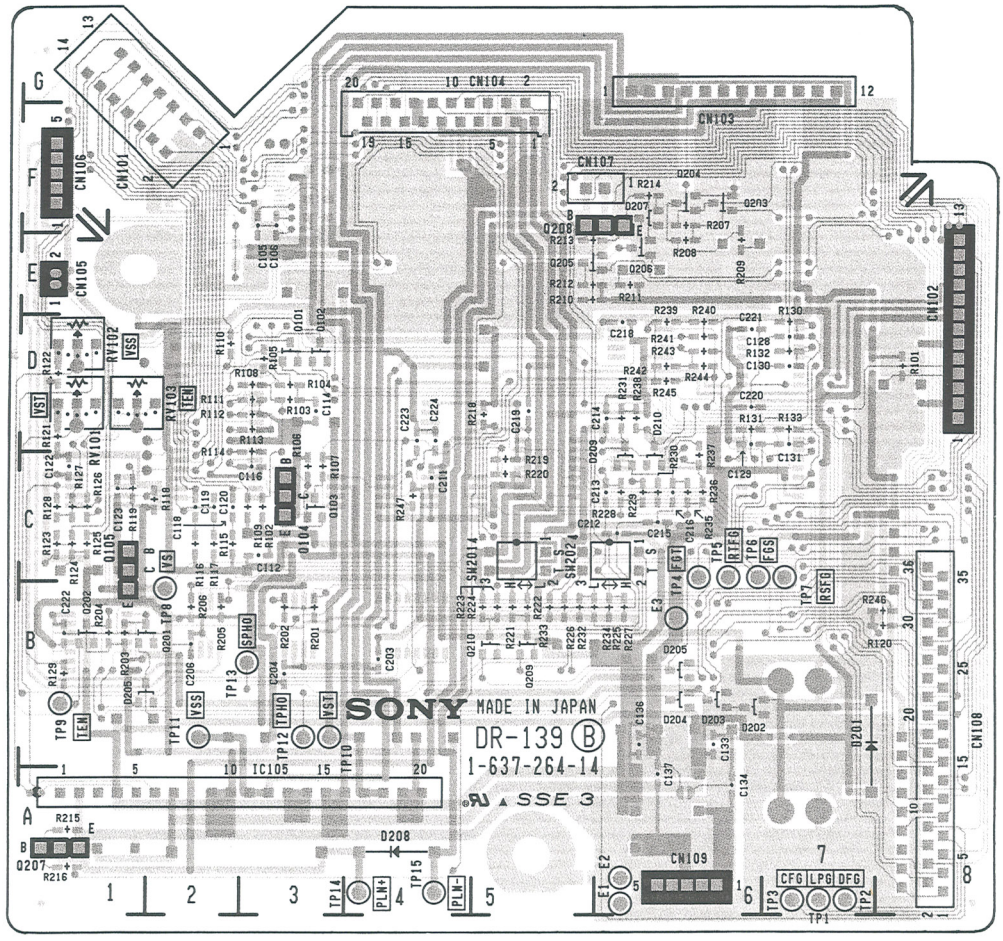

SOLDER SIDE PATTERN 1-637-264-14
COMPONENT SIDE PATTERN 1-637-264-14

D202	B-6
D203	B-6
D204	B-6
D205	B-6
D206	B-1
D207	F-6
D209	C-6
D210	D-6
E1	A-6
E2	A-6
E3	B-6
Q101	D-3
Q102	D-3
Q103	C-3
Q104	C-3
Q201	B-2
Q202	B-1
Q203	F-6
Q204	F-6
Q205	E-5
Q206	E-6
Q207	A-1
Q209	B-5
Q210	B-5

KY-192 KY-192

KY-192 BOARD (PCM-7050)
(1-637-268-11)
Component Side

Serial No. UC 20001 to 20025
EK 50001 to 50065

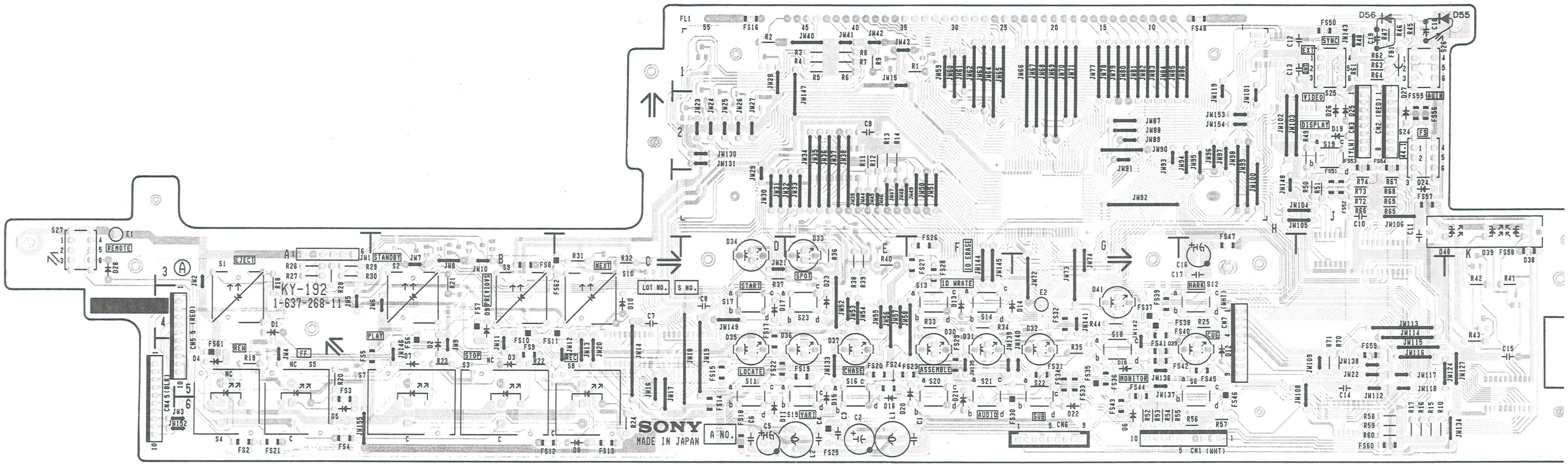

SOLDER SIDE PATTERN 1-637-268-11

Applied Serial No.	L E
Parts that have been changed.	C C

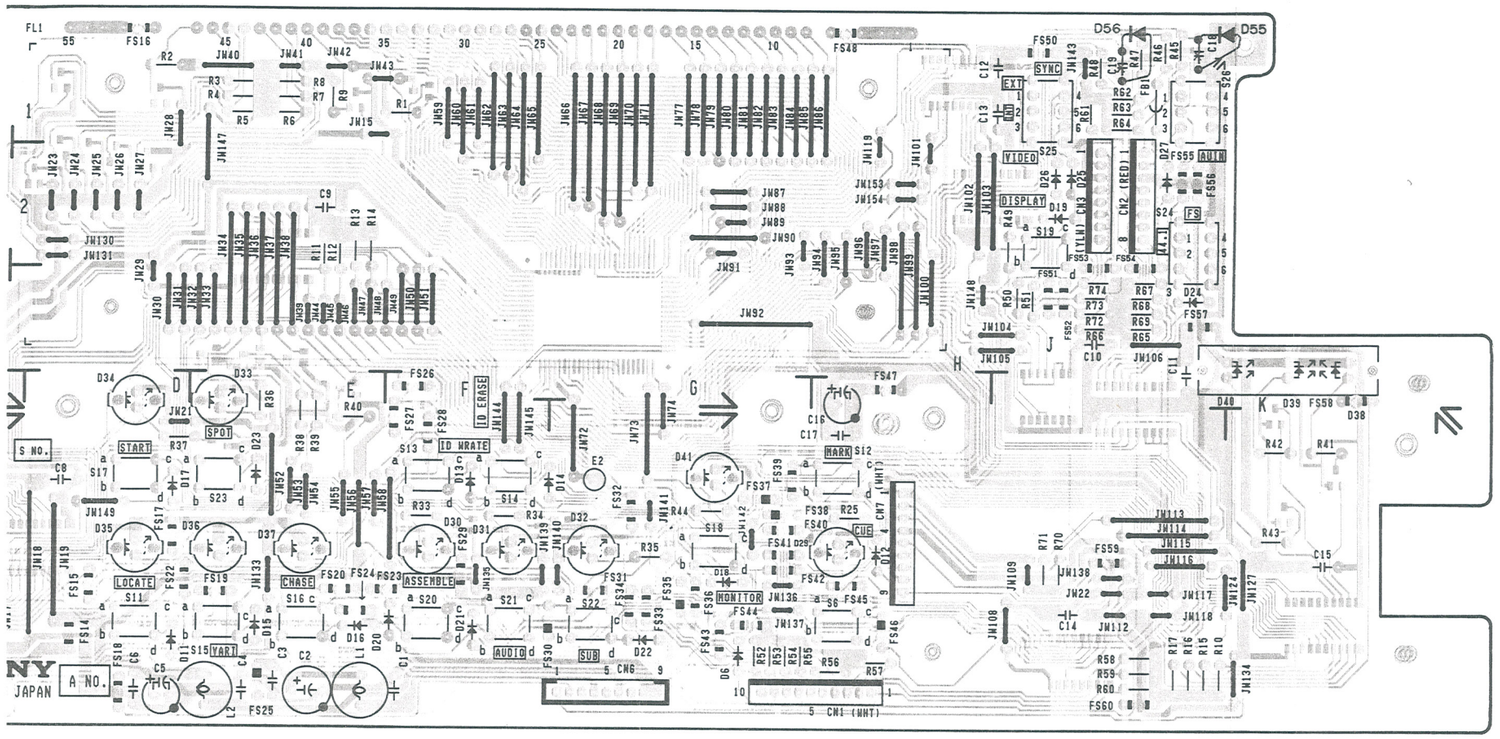

D1	A-4	S3	B-5
D2	B-5	S4	A-6
D3	B-5	S5	A-5
D4	A-5	S6	H-5
D5	A-6	S7	A-5
D6	G-6	S8	C-5
D7	B-5	S9	B-3
D8	C-6	S10	C-3
D9	B-4	S11	D-5
D10	C-4	S12	H-3
D11	D-6	S13	F-3
D12	H-5	S14	F-4
D13	F-4	S15	E-5
D14	G-4	S16	E-5
D15	E-5	S17	D-4
D16	E-5	S18	G-4
D17	D-4	S19	J-2
D18	G-5	S20	F-5
D19	J-2	S21	F-5
D20	F-5	S22	G-5
D21	F-5	S23	E-4
D22	G-6	S24	J-2
D23	E-3	S25	J-1
D24	J-3	S26	J-1
D25	J-2	S27	A-3
D26	J-2		
D27	J-2		
D28	A-3		
D29	G-5		
D30	F-4		
D31	F-4		
D32	G-4		
D33	E-3		
D34	D-3		
D35	D-4		
D36	E-4		
D37	E-4		
D38	K-3		
D39	K-3		
D40	K-3		
D41	G-4		
E1	A-3		
E2	G-4		
S1	A-3		
S2	B-3		

Applied Serial No.	UC 20001 to 20025 EK 50001 to 50065
Parts that have been changed.	C18 → D55 C19 → D56

KY-192 KY-192

KY-192 BOARD (PCM-7050)
(1-637-268-11)
Solder Side

Serial No. UC 20001 to 20025
EK 50001 to 50065

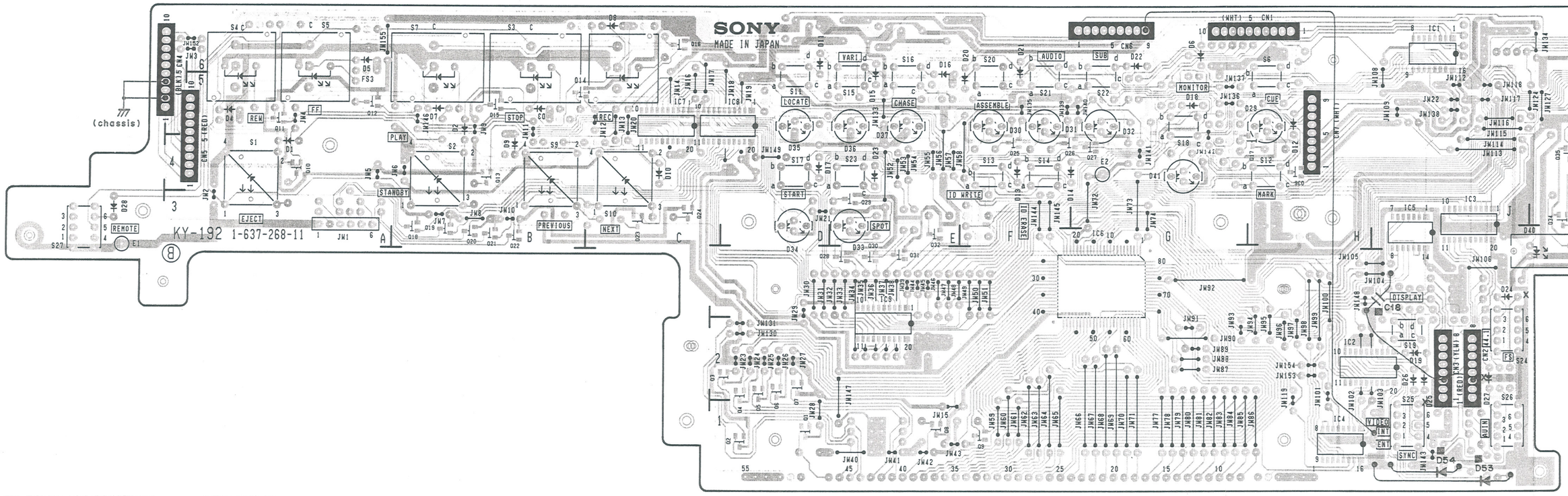

SOLDER SIDE PATTERN 1-637-268-11

Applied Serial No. UC 20001 to 20025 EK 50001 to 50065	
Jumpers that have been soldered or cut.	CN2-3 ⟋ GND CN3-3 ⟋ GND D40 cathode ⟋ GND CN2-3 CN3-3 CN4- C13
Parts marked with ‼ that have been installed on the solder side.	‼ D53 ‼ D54 ‼ C18

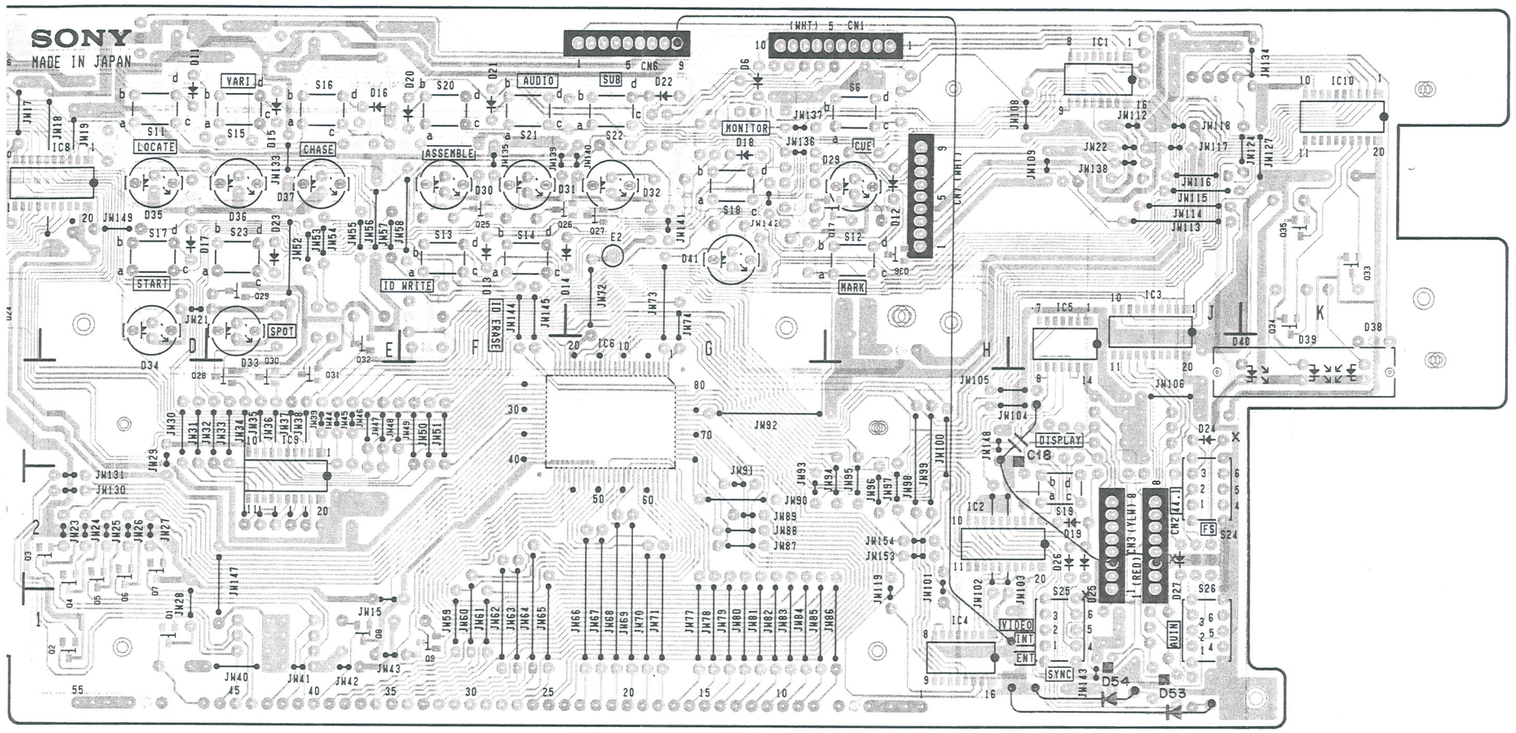

Applied Serial No. UC 20001 to 20025 EK 50001 to 50065	
Jumpers that have been soldered or cut.	CN2-3 ⊣⊢ GND CN3-3 ⊣⊢ GND D40 cathode ⊣⊢ GND CN2-3 —— CN3-3 CN3-3 —— JW148 CN4-2,4 —— Chassis C13 —— CN6-9
Parts marked with ‼ that have been installed on the solder side.	‼ D53 ‼ D54 ‼ C18

D1	A-4	IC3	J-3	S2	B-3
D2	B-5	IC4	H-1	S3	B-5
D3	B-5	IC5	J-3	S4	A-6
D4	A-5	IC6	G-3	S5	A-5
D5	A-6	IC7	C-5	S6	H-5
D6	G-6	IC8	D-5	S7	A-5
D7	B-5	IC9	E-3	S8	C-5
D8	C-6	IC10	K-6	S9	B-3
D9	B-4			S10	C-3
D10	C-4	Q1	D-1	S11	D-5
D11	D-6	Q2	D-1	S12	H-3
D12	H-5	Q3	C-2	S13	F-3
D13	F-4	Q4	D-1	S14	F-4
D14	G-4	Q5	D-1	S15	E-5
D15	E-5	Q6	D-1	S16	E-5
D16	E-5	Q7	D-1	S17	D-4
D17	D-4	Q8	E-1	S18	G-4
D18	G-5	Q9	F-1	S19	J-2
D19	J-2	Q10	A-4	S20	F-5
D20	F-5	Q11	A-5	S21	F-5
D21	F-5	Q12	A-5	S22	G-5
D22	G-6	Q13	B-4	S23	E-4
D23	E-3	Q14	B-5	S24	J-2
D24	J-3	Q15	B-5	S25	J-1
D25	J-2	Q16	C-6	S26	J-1
D26	J-2	Q17	H-4	S27	A-3
D27	J-2	Q18	B-3		
D28	A-3	Q19	B-3		
D29	G-5	Q20	B-3		
D30	F-4	Q21	B-3		
D31	F-4	Q22	B-3		
D32	G-4	Q23	C-3		
D33	E-3	Q24	C-3		
D34	D-3	Q25	F-4		
D35	D-4	Q26	G-4		
D36	E-4	Q27	G-4		
D37	E-4	Q28	D-3		
D38	K-3	Q29	E-3		
D39	K-3	Q30	E-3		
D40	K-3	Q31	E-3		
D41	G-4	Q32	E-3		
		Q33	K-4		
E1	A-3	Q34	K-3		
E2	G-4	Q35	K-4		
		Q36	H-4		
IC1	J-6				
IC2	H-2	S1	A-3		

KY-192 BOARD (PCM-7050)
(1-637-268-12)
Component Side

Serial No. UC 20026 to 20055
EK 50066 to 50175

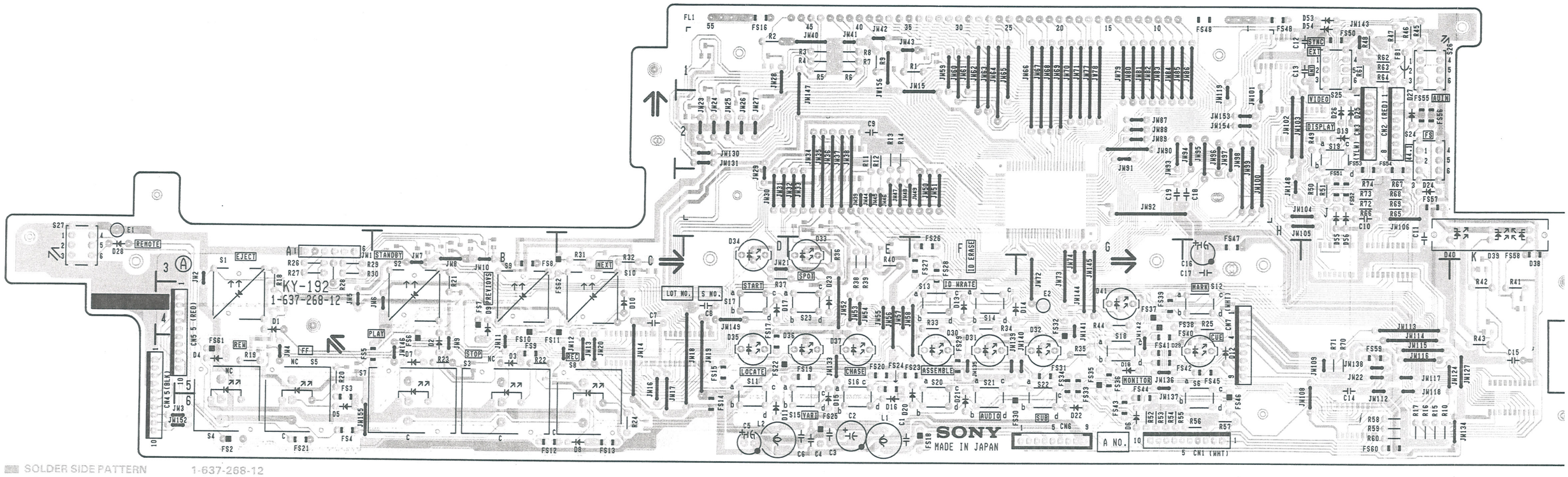

SOLDER SIDE PATTERN 1-637-268-12

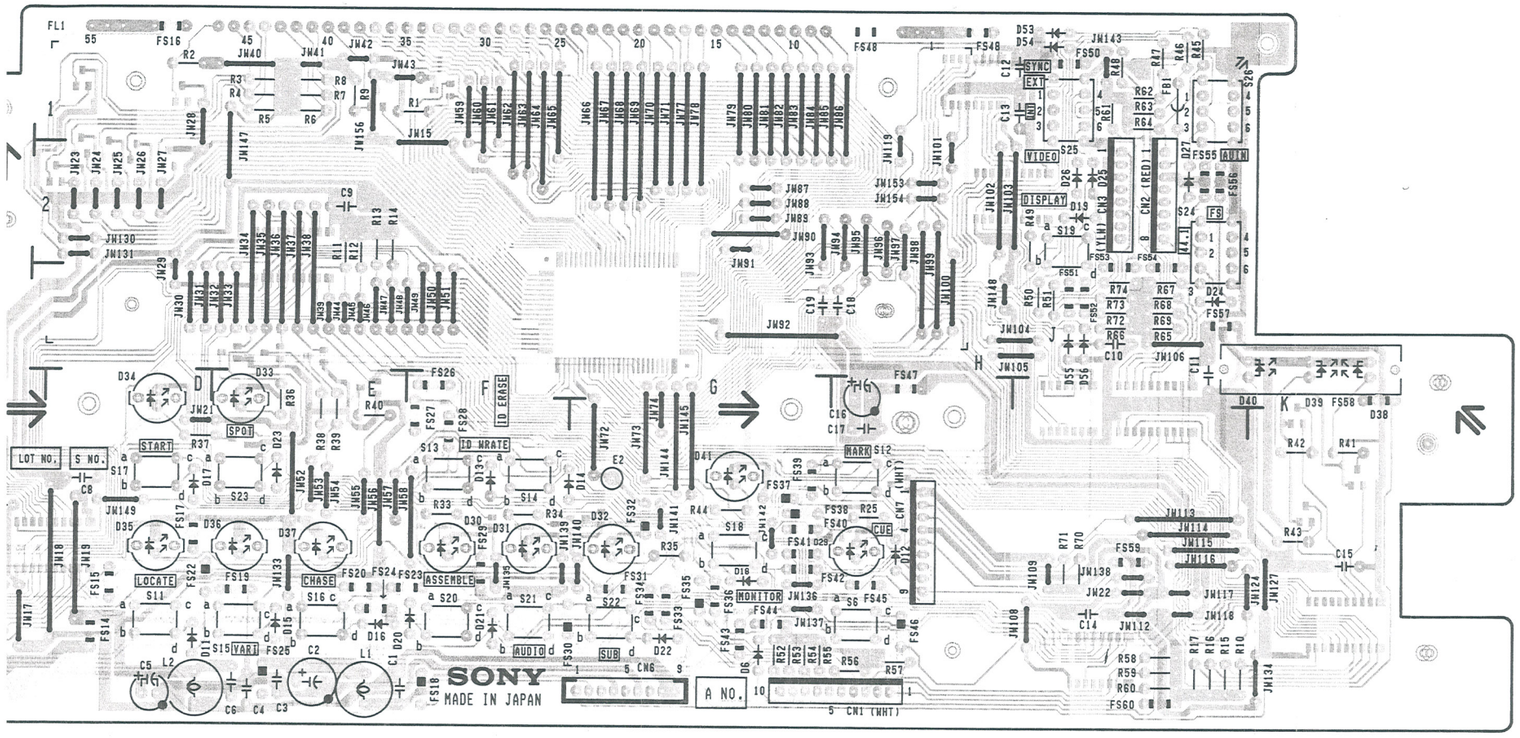

D1	A-4	S3	B-5
D2	B-5	S4	A-6
D3	B-5	S5	A-5
D4	A-5	S6	H-5
D5	A-6	S7	A-5
D6	G-6	S8	C-5
D7	B-5	S9	B-3
D8	C-6	S10	C-3
D9	B-4	S11	D-5
D10	C-4	S12	H-3
D11	D-6	S13	F-3
D12	H-5	S14	F-4
D13	F-4	S15	E-5
D14	G-4	S16	E-5
D15	E-5	S17	D-4
D16	E-5	S18	G-4
D17	D-4	S19	J-2
D18	G-5	S20	F-5
D19	J-2	S21	F-5
D20	F-5	S22	G-5
D21	F-5	S23	E-4
D22	G-6	S24	J-2
D23	E-3	S25	J-1
D24	J-3	S26	J-1
D25	J-2	S27	A-3
D26	J-2		
D27	J-2		
D28	A-3		
D29	G-5		
D30	F-4		
D31	F-4		
D32	G-4		
D33	E-3		
D34	D-3		
D35	D-4		
D36	E-4		
D37	E-4		
D38	K-3		
D39	K-3		
D40	K-3		
D41	G-4		
E1	A-3		
E2	G-4		
S1	A-3		
S2	B-3		

KY-192

KY-192 BOARD (PCM-7050)
(1-637-268-12)
Solder Side

Serial No. UC 20026 to 20055
EK 50066 to 50175

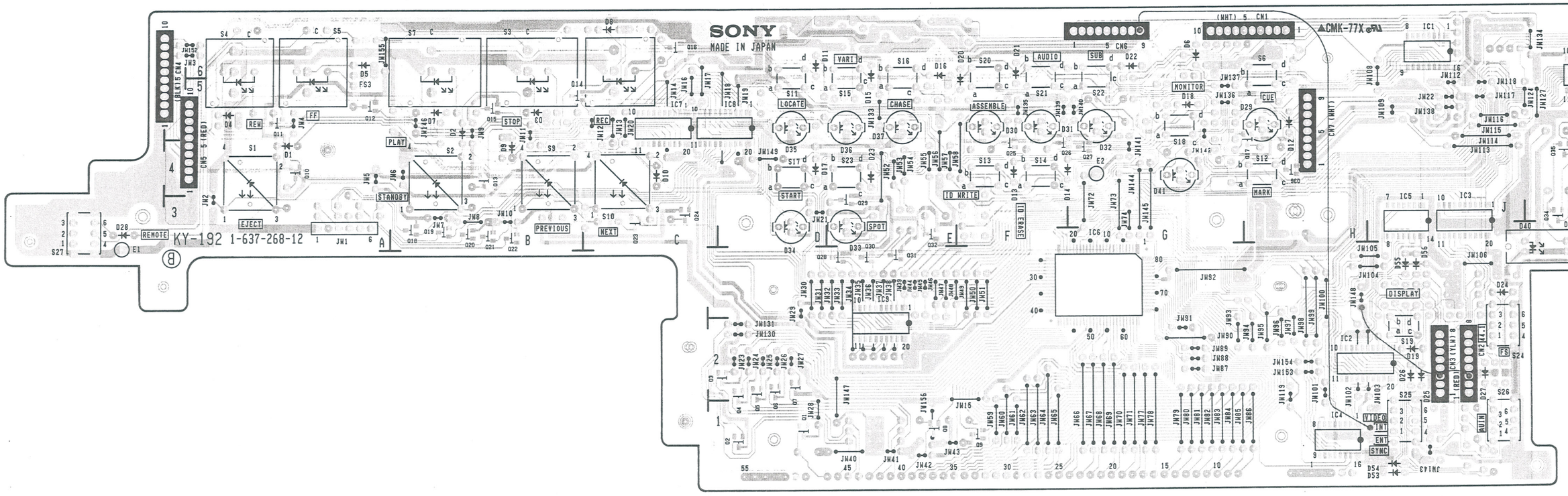

SOLDER SIDE PATTERN 1-637-268-12

Applied Serial No. U
E

Jumpers that have bee
soldered.

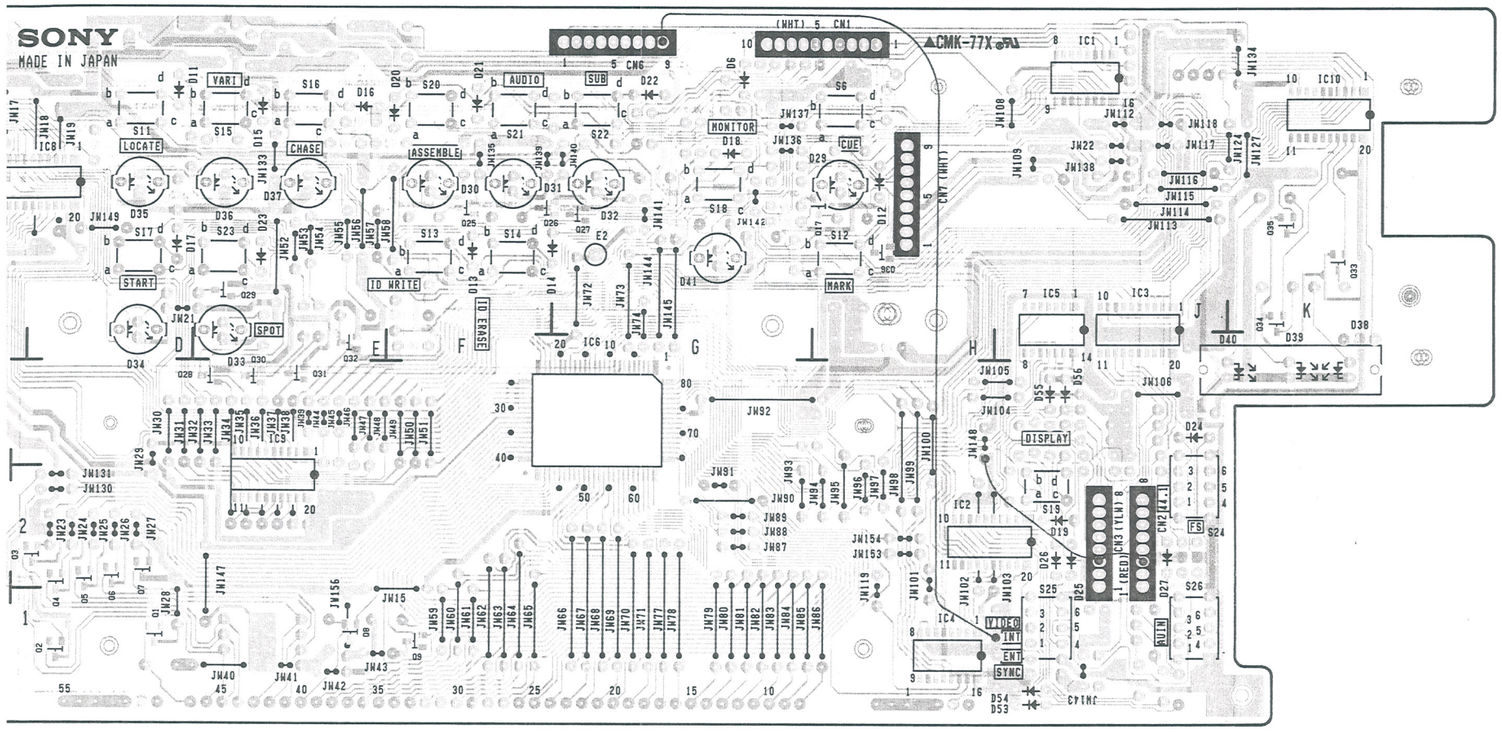

D1	A-4	IC3	J-3	S2	B-3
D2	B-5	IC4	H-1	S3	B-5
D3	B-5	IC5	J-3	S4	A-6
D4	A-5	IC6	G-3	S5	A-5
D5	A-6	IC7	C-5	S6	H-5
D6	G-6	IC8	D-5	S7	A-5
D7	B-5	IC9	E-3	S8	C-5
D8	C-6	IC10	K-6	S9	B-3
D9	B-4			S10	C-3
D10	C-4	Q1	D-1	S11	D-5
D11	D-6	Q2	D-1	S12	H-3
D12	H-5	Q3	C-2	S13	F-3
D13	F-4	Q4	D-1	S14	F-4
D14	G-4	Q5	D-1	S15	E-5
D15	E-5	Q6	D-1	S16	E-5
D16	E-5	Q7	D-1	S17	D-4
D17	D-4	Q8	E-1	S18	G-4
D18	G-5	Q9	F-1	S19	J-2
D19	J-2	Q10	A-4	S20	F-5
D20	F-5	Q11	A-5	S21	F-5
D21	F-5	Q12	A-5	S22	G-5
D22	G-6	Q13	B-4	S23	E-4
D23	E-3	Q14	B-5	S24	J-2
D24	J-3	Q15	B-5	S25	J-1
D25	J-2	Q16	C-6	S26	J-1
D26	J-2	Q17	H-4	S27	A-3
D27	J-2	Q18	B-3		
D28	A-3	Q19	B-3		
D29	G-5	Q20	B-3		
D30	F-4	Q21	B-3		
D31	F-4	Q22	B-3		
D32	G-4	Q23	C-3		
D33	E-3	Q24	C-3		
D34	D-3	Q25	F-4		
D35	D-4	Q26	G-4		
D36	E-4	Q27	G-4		
D37	E-4	Q28	D-3		
D38	K-3	Q29	E-3		
D39	K-3	Q30	E-3		
D40	K-3	Q31	E-3		
D41	G-4	Q32	E-3		
		Q33	K-4		
E1	A-3	Q34	K-3		
E2	G-4	Q35	K-4		
		Q36	H-4		
IC1	J-6				
IC2	H-2	S1	A-3		

Applied Serial No. UC 20026 to 20055 EK 50066 to 50175	
Jumpers that have been soldered.	CN2-3 —— CN3-3 CN3-3 —— JW148 C13 —— CN6-9

KY-192

KY-192 BOARD (PCM-7050)
(1-637-268-13)
Component Side

Serial No. UC 20056 and higher
EK 50176 and higher

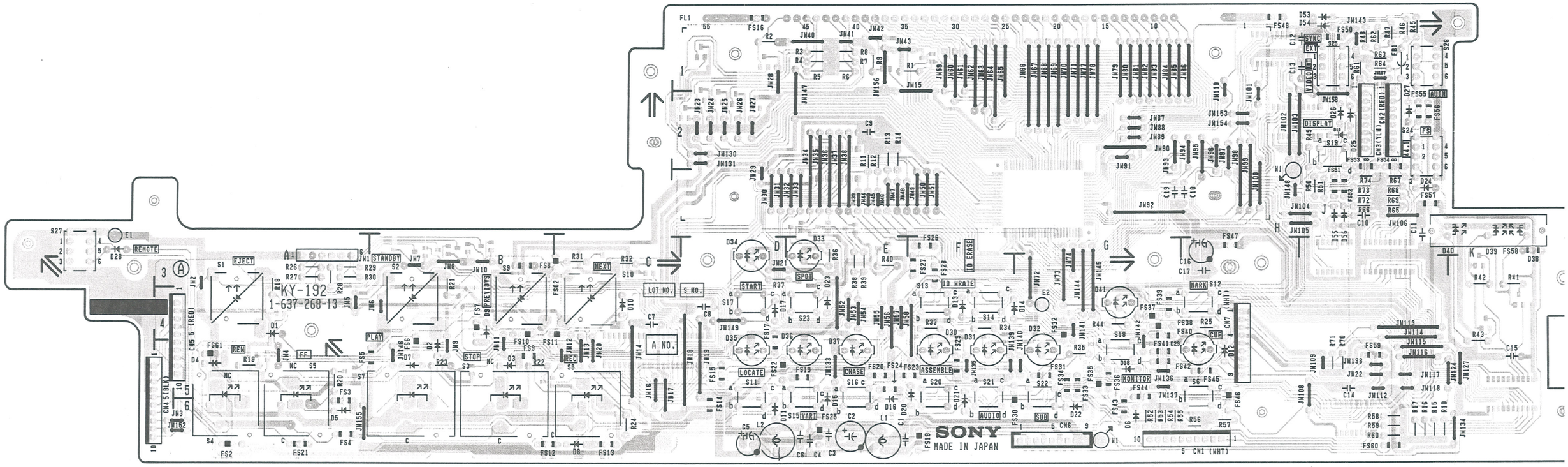

SOLDER SIDE PATTERN 1-637-268-13

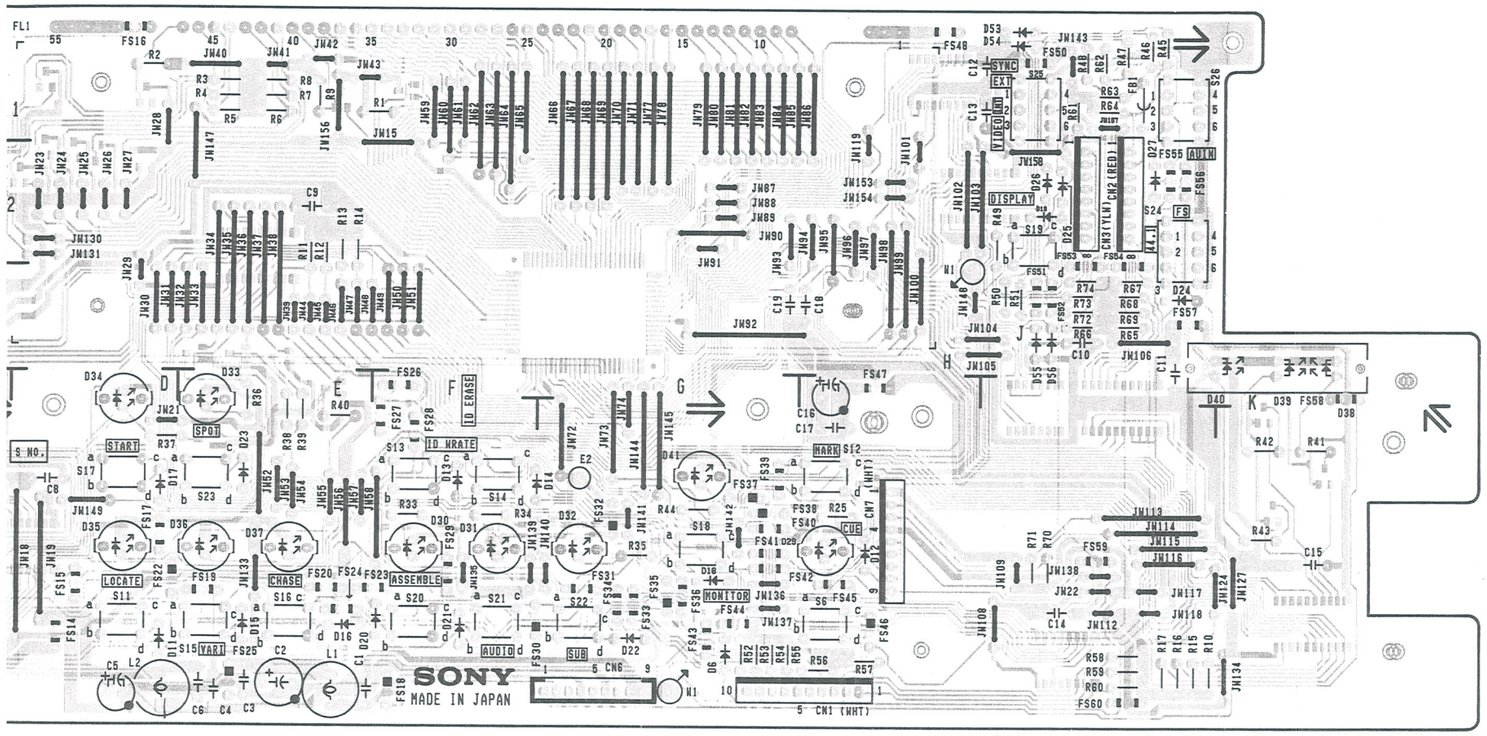

D1	A-4	S3	B-5
D2	B-5	S4	A-6
D3	B-5	S5	A-5
D4	A-5	S6	H-5
D5	A-6	S7	A-5
D6	G-6	S8	C-5
D7	B-5	S9	B-3
D8	C-6	S10	C-3
D9	B-4	S11	D-5
D10	C-4	S12	H-3
D11	D-6	S13	F-3
D12	H-5	S14	F-4
D13	F-4	S15	E-5
D14	G-4	S16	E-5
D15	E-5	S17	D-4
D16	E-5	S18	G-4
D17	D-4	S19	J-2
D18	G-5	S20	F-5
D19	J-2	S21	F-5
D20	F-5	S22	G-5
D21	F-5	S23	E-4
D22	G-6	S24	J-2
D23	E-3	S25	J-1
D24	J-3	S26	J-1
D25	J-2	S27	A-3
D26	J-2		
D27	J-2		
D28	A-3		
D29	G-5		
D30	F-4		
D31	F-4		
D32	G-4		
D33	E-3		
D34	D-3		
D35	D-4		
D36	E-4		
D37	E-4		
D38	K-3		
D39	K-3		
D40	K-3		
D41	G-4		
E1	A-3		
E2	G-4		
S1	A-3		
S2	B-3		

KY-192 BOARD (PCM-7050)
(1-637-268-13)
Solder Side

Serial No. UC 20056 and higher
EK 50176 and higher

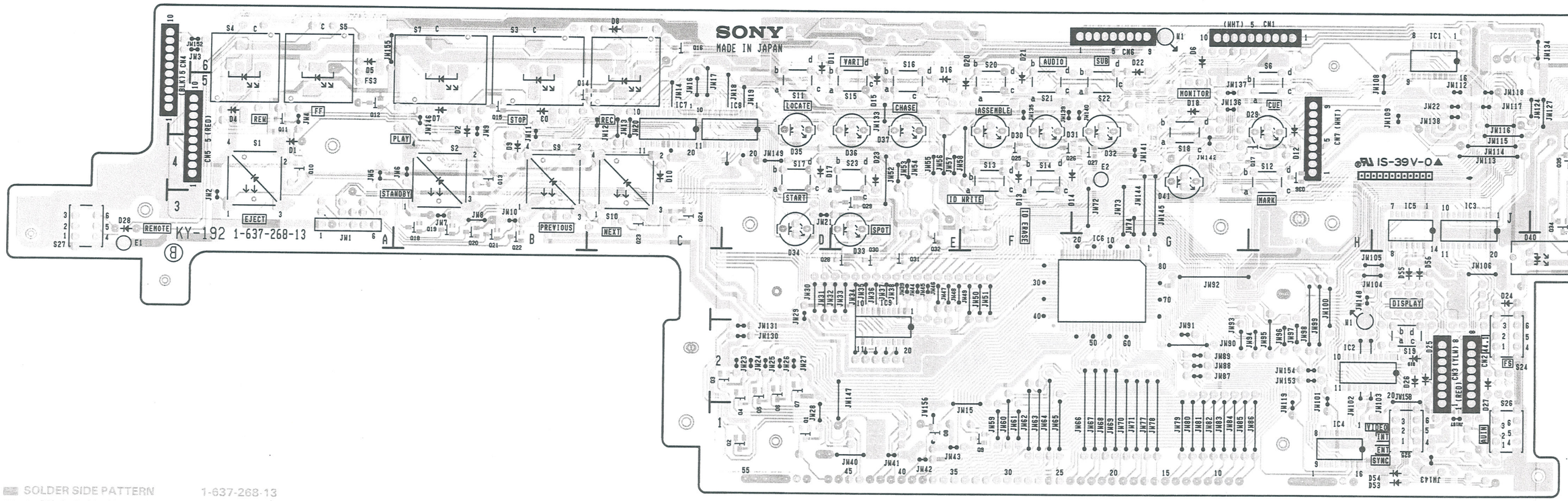

SOLDER SIDE PATTERN 1-637-268-13

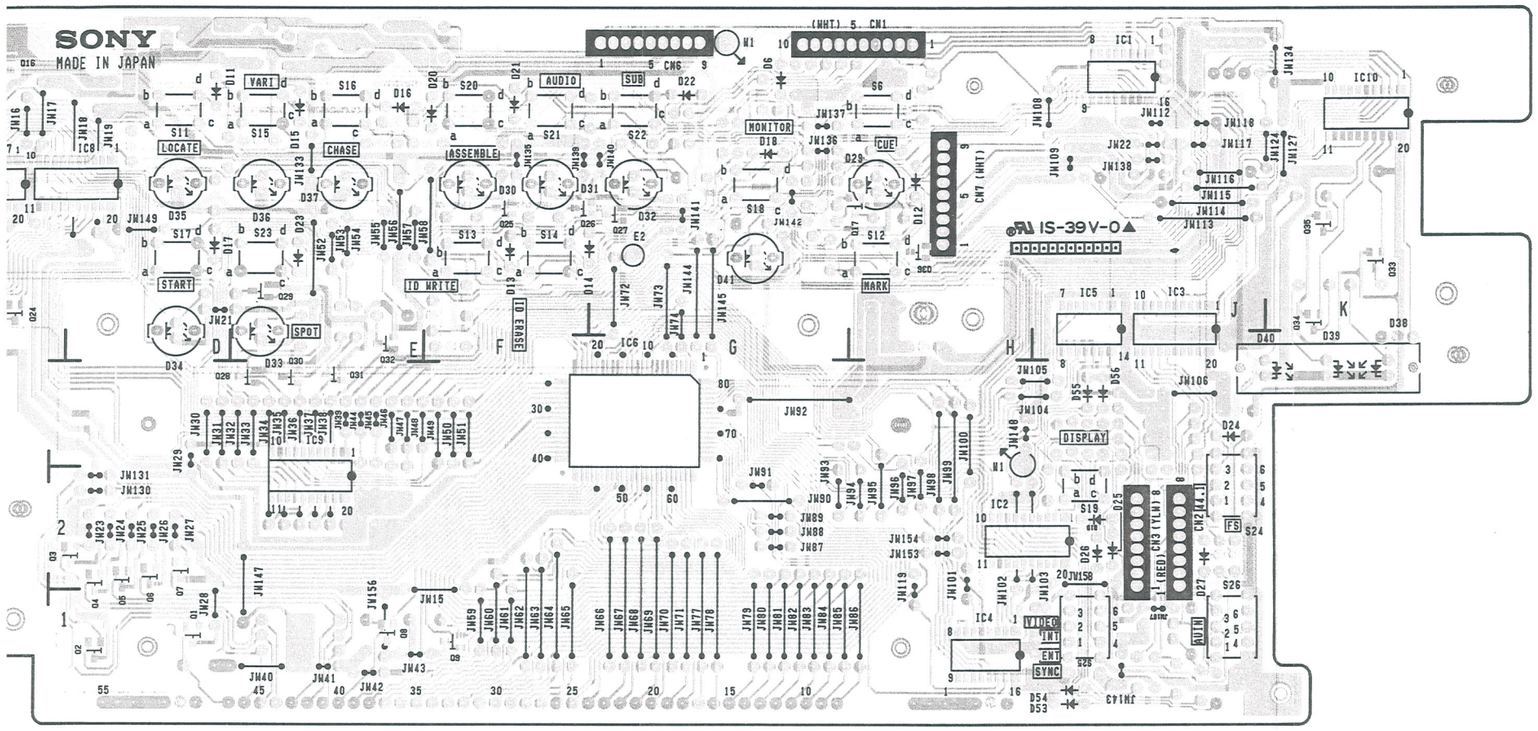

D1	A-4	IC3	J-3	S2	B-3
D2	B-5	IC4	H-1	S3	B-5
D3	B-5	IC5	J-3	S4	A-6
D4	A-5	IC6	G-3	S5	A-5
D5	A-6	IC7	C-5	S6	H-5
D6	G-6	IC8	D-5	S7	A-5
D7	B-5	IC9	E-3	S8	C-5
D8	C-6	IC10	K-6	S9	B-3
D9	B-4			S10	C-3
D10	C-4	Q1	D-1	S11	D-5
D11	D-6	Q2	D-1	S12	H-3
D12	H-5	Q3	C-2	S13	F-3
D13	F-4	Q4	D-1	S14	F-4
D14	G-4	Q5	D-1	S15	E-5
D15	E-5	Q6	D-1	S16	E-5
D16	E-5	Q7	D-1	S17	D-4
D17	D-4	Q8	E-1	S18	G-4
D18	G-5	Q9	F-1	S19	J-2
D19	J-2	Q10	A-4	S20	F-5
D20	F-5	Q11	A-5	S21	F-5
D21	F-5	Q12	A-5	S22	G-5
D22	G-6	Q13	B-4	S23	E-4
D23	E-3	Q14	B-5	S24	J-2
D24	J-3	Q15	B-5	S25	J-1
D25	J-2	Q16	C-6	S26	J-1
D26	J-2	Q17	H-4	S27	A-3
D27	J-2	Q18	B-3		
D28	A-3	Q19	B-3		
D29	G-5	Q20	B-3		
D30	F-4	Q21	B-3		
D31	F-4	Q22	B-3		
D32	G-4	Q23	C-3		
D33	E-3	Q24	C-3		
D34	D-3	Q25	F-4		
D35	D-4	Q26	G-4		
D36	E-4	Q27	G-4		
D37	E-4	Q28	D-3		
D38	K-3	Q29	E-3		
D39	K-3	Q30	E-3		
D40	K-3	Q31	E-3		
D41	G-4	Q32	E-3		
		Q33	K-4		
E1	A-3	Q34	K-3		
E2	G-4	Q35	K-4		
		Q36	H-4		
IC1	J-6				
IC2	H-2	S1	A-3		

LE-90A BOARD (PCM-7050)
(1-637-285-12)
Component Side

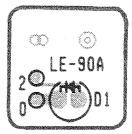

SOLDER SIDE PATTERN 1-637-285-12

LE-90B BOARD (PCM-7050)
(1-637-286-12)
Component Side

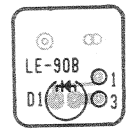

SOLDER SIDE PATTERN 1-637-286-12

LED-104 BOARD (PCM-7050)
(1-637-269-11)
Component Side

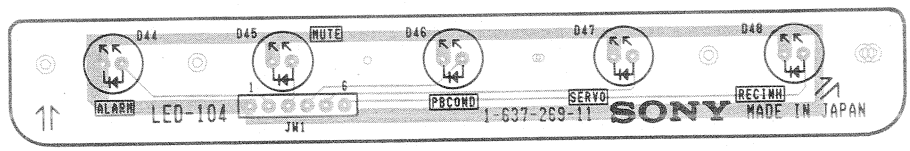

SOLDER SIDE PATTERN 1-637-269-11

MEM-40A BOARD (PCM-7050)
(1-637-290-11)
Component Side

Serial No. UC 20001 to 20035
EK 50001 to 50115

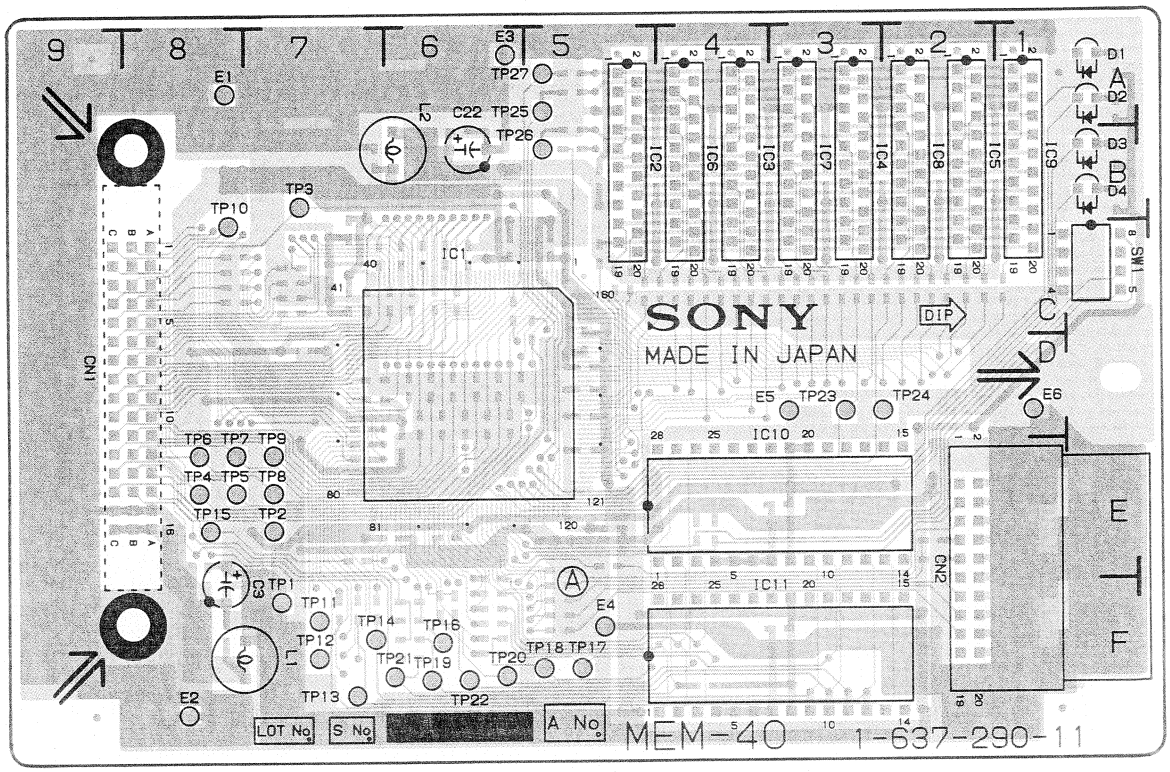

SOLDER SIDE PATTERN 1-637-290-11
COMPONENT SIDE PATTERN 1-637-290-11

D1	A-1	TP1	F-7	TP24	D-2
D2	A-1	TP2	E-7	TP25	A-6
D3	B-1	TP3	B-7	TP26	B-6
D4	B-1	TP4	E-8	TP27	A-6
		TP5	E-8		
E1	A-8	TP6	E-8		
E2	F-8	TP7	E-8		
E3	A-6	TP8	E-7		
E4	F-5	TP9	E-7		
E5	D-4	TP10	B-8		
E6	D-1	TP11	F-7		
		TP12	F-7		
IC1	C-6	TP13	F-7		
IC2	B-5	TP14	F-7		
IC3	B-4	TP15	E-8		
IC4	B-3	TP16	F-6		
IC5	B-2	TP17	F-5		
IC6	B-4	TP18	F-5		
IC7	B-3	TP19	F-6		
IC8	B-2	TP20	F-6		
IC9	B-1	TP21	F-6		
IC10	D-4	TP22	F-6		
IC11	F-4	TP23	D-3		

MEM-40A BOARD (PCM-7050)
(1-637-290-11)
Solder Side

Serial No. UC 20001 to 20035
EK 50001 to 50115

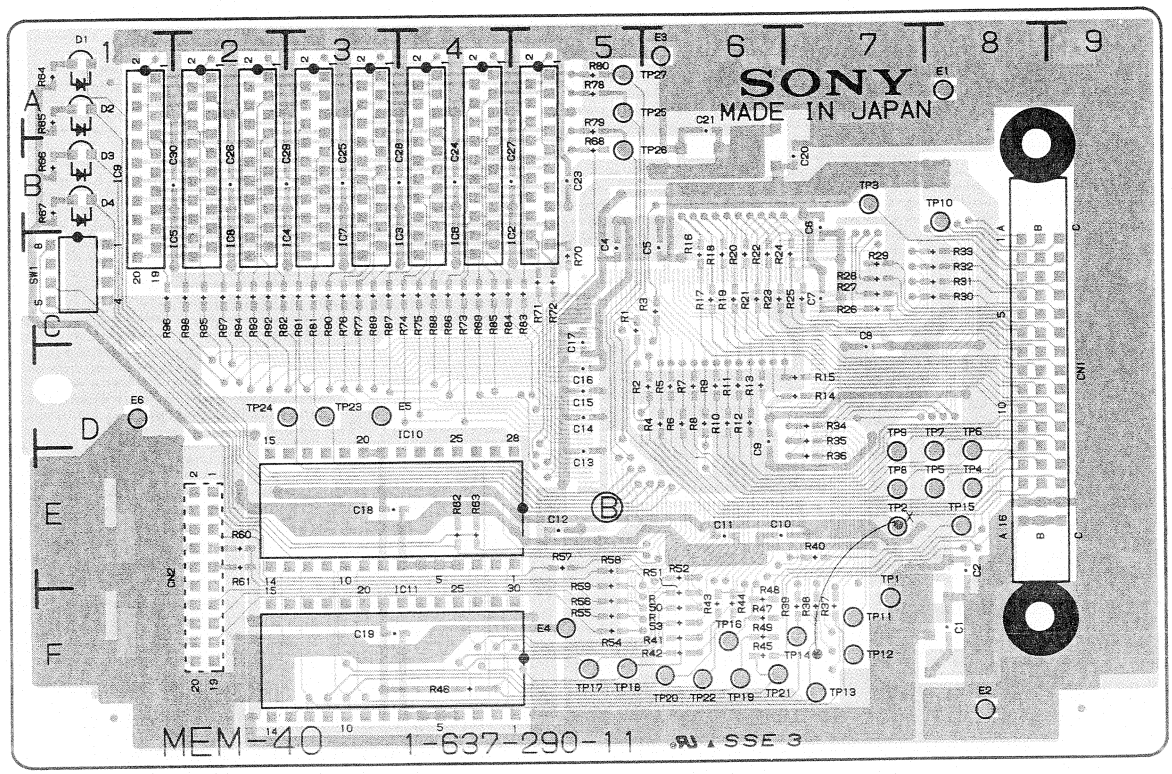

SOLDER SIDE PATTERN 1-637-290-11
COMPONENT SIDE PATTERN 1-637-290-11

D1	A-1	TP1	F-7	TP24	D-2
D2	A-1	TP2	E-7	TP25	A-6
D3	B-1	TP3	B-7	TP26	B-6
D4	B-1	TP4	E-8	TP27	A-6
		TP5	E-8		
E1	A-8	TP6	E-8		
E2	F-8	TP7	E-8		
E3	A-6	TP8	E-7		
E4	F-5	TP9	E-7		
E5	D-4	TP10	B-8		
E6	D-1	TP11	F-7		
		TP12	F-7		
IC1	C-6	TP13	F-7		
IC2	B-5	TP14	F-7		
IC3	B-4	TP15	E-8		
IC4	B-3	TP16	F-6		
IC5	B-2	TP17	F-5		
IC6	B-4	TP18	F-5		
IC7	B-3	TP19	F-6		
IC8	B-2	TP20	F-6		
IC9	B-1	TP21	F-6		
IC10	D-4	TP22	F-6		
IC11	F-4	TP23	D-3		

Applied Serial No. UC 20001 to 20035 EK 50001 to 50115	
Jumpers that have been soldered or cut.	CN1-14B —X— TP2 IC1-76 —— TP2

MEM-40A BOARD (PCM-7050)
(1-637-290-12)
Component Side

Serial No. UC 20036 and higher
EK 50116 and higher

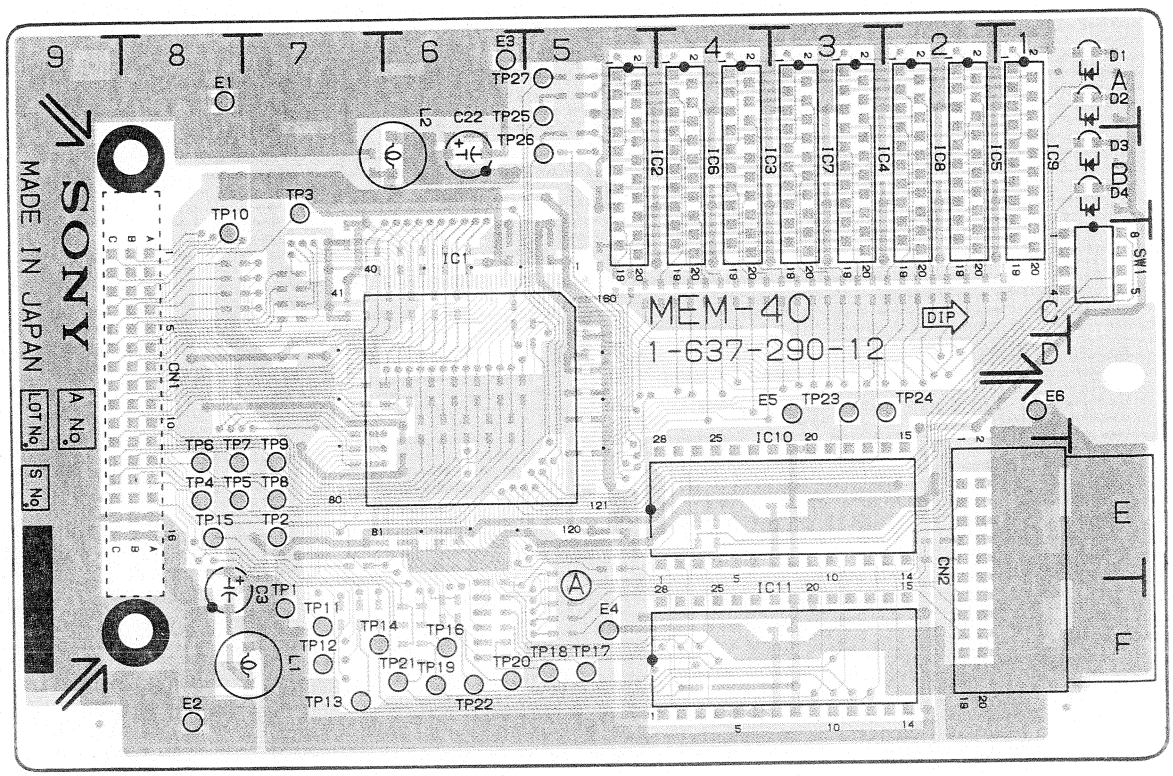

SOLDER SIDE PATTERN 1-637-290-12
COMPONENT SIDE PATTERN 1-637-290-12

D1	A-1	TP1	F-7	TP24	D-2
D2	A-1	TP2	E-7	TP25	A-6
D3	B-1	TP3	B-7	TP26	B-6
D4	B-1	TP4	E-8	TP27	A-6
		TP5	E-8		
E1	A-8	TP6	E-8		
E2	F-8	TP7	E-8		
E3	A-6	TP8	E-7		
E4	F-5	TP9	E-7		
E5	D-4	TP10	B-8		
E6	D-1	TP11	F-7		
		TP12	F-7		
IC1	C-6	TP13	F-7		
IC2	B-5	TP14	F-7		
IC3	B-4	TP15	E-8		
IC4	B-3	TP16	F-6		
IC5	B-2	TP17	F-5		
IC6	B-4	TP18	F-5		
IC7	B-3	TP19	F-6		
IC8	B-2	TP20	F-6		
IC9	B-1	TP21	F-6		
IC10	D-4	TP22	F-6		
IC11	F-4	TP23	D-3		

MEM-40A BOARD (PCM-7050)
(1-637-290-12)
Solder Side

Serial No. UC 20036 and higher
EK 50116 and higher

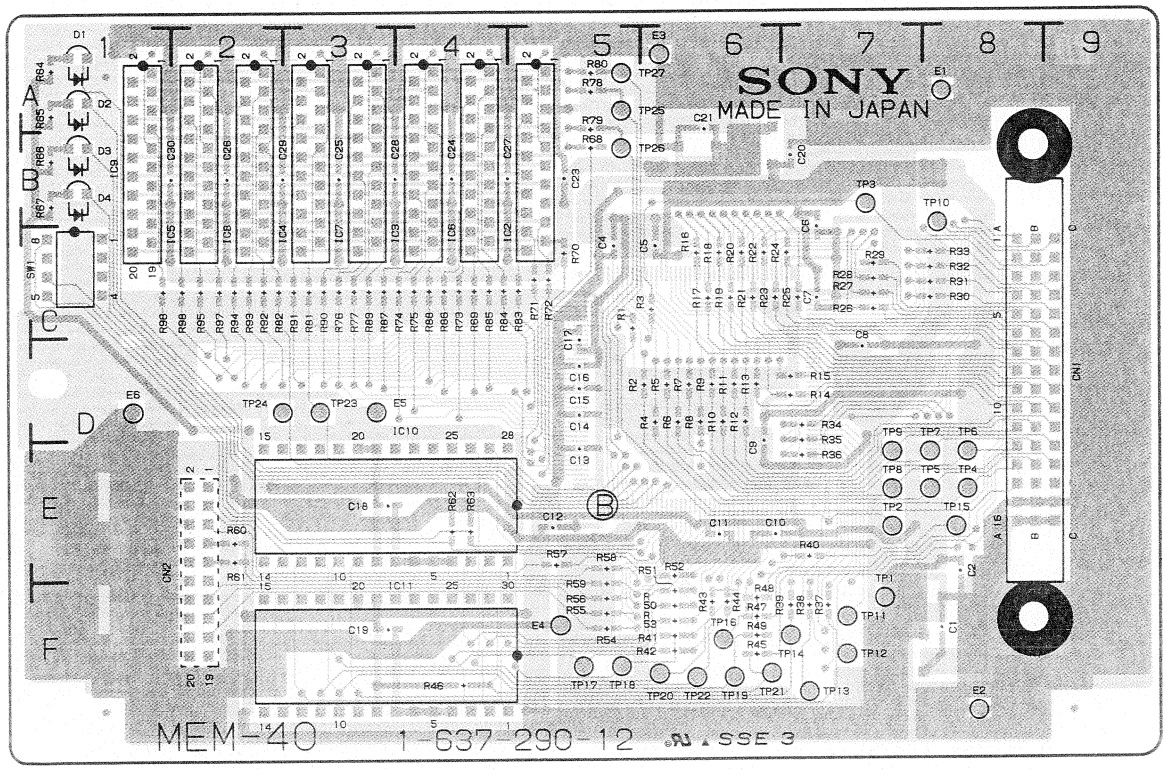

SOLDER SIDE PATTERN 1-637-290-12
COMPONENT SIDE PATTERN 1-637-290-12

D1	A-1	TP1	F-7	TP24	D-2
D2	A-1	TP2	E-7	TP25	A-6
D3	B-1	TP3	B-7	TP26	B-6
D4	B-1	TP4	E-8	TP27	A-6
		TP5	E-8		
E1	A-8	TP6	E-8		
E2	F-8	TP7	E-8		
E3	A-6	TP8	E-7		
E4	F-5	TP9	E-7		
E5	D-4	TP10	B-8		
E6	D-1	TP11	F-7		
		TP12	F-7		
IC1	C-6	TP13	F-7		
IC2	B-5	TP14	F-7		
IC3	B-4	TP15	E-8		
IC4	B-3	TP16	F-6		
IC5	B-2	TP17	F-5		
IC6	B-4	TP18	F-5		
IC7	B-3	TP19	F-6		
IC8	B-2	TP20	F-6		
IC9	B-1	TP21	F-6		
IC10	D-4	TP22	F-6		
IC11	F-4	TP23	D-3		

PS-211 BOARD (PCM-7050)
(1-637-273-12)
Component Side

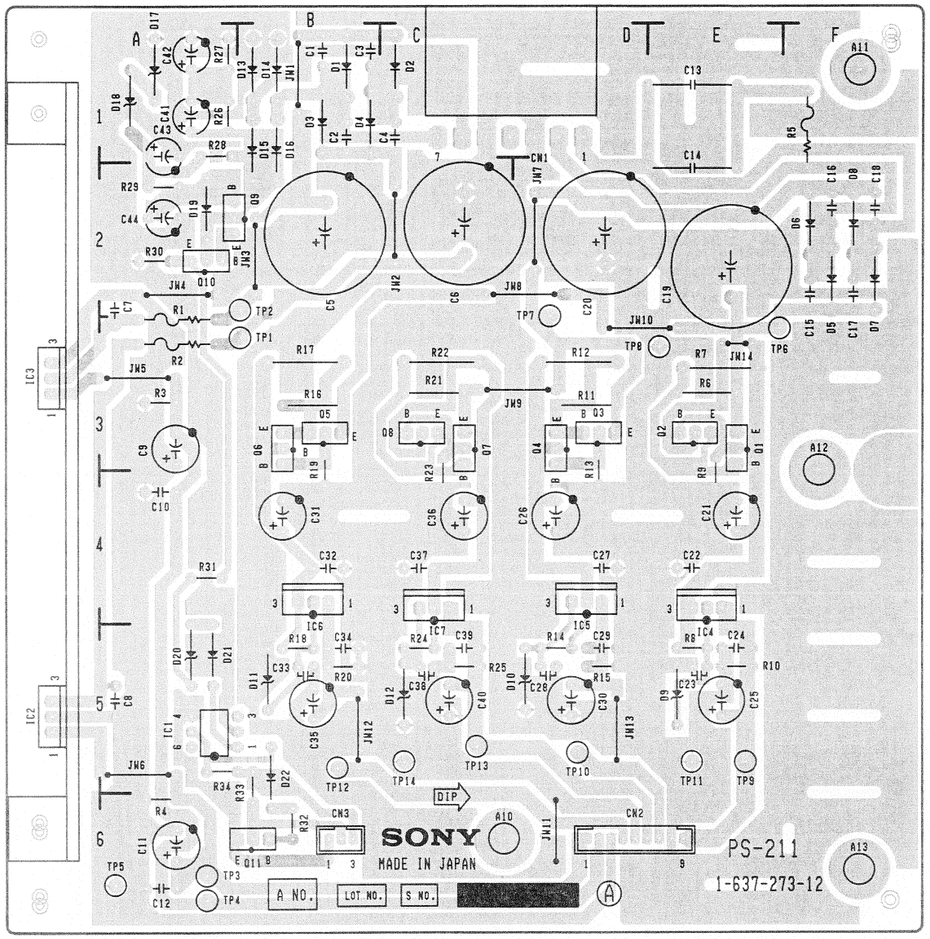

SOLDER SIDE PATTERN 1-637-273-12

D1	B-1	TP5	A-6
D2	C-1	TP6	E-2
D3	B-1	TP7	D-2
D4	B-1	TP8	D-3
D5	F-3	TP9	E-5
D6	F-2	TP10	D-5
D7	F-3	TP11	E-5
D8	F-2	TP12	B-5
D9	E-5	TP13	C-5
D10	D-5	TP14	C-5
D11	B-5		
D12	C-5		
D13	B-1		
D14	B-1		
D15	B-1		
D16	B-1		
D17	A-1		
D18	A-1		
D19	A-2		
D20	A-5		
D21	A-5		
D22	B-4		
IC1	A-5		
IC2	A-5		
IC3	A-3		
IC4	E-5		
IC5	D-4		
IC6	B-4		
IC7	C-5		
Q1	E-3		
Q2	E-3		
Q3	D-3		
Q4	D-3		
Q5	B-3		
Q6	B-3		
Q7	C-3		
Q8	C-3		
Q9	B-2		
Q10	A-2		
Q11	B-6		
TP1	B-3		
TP2	B-3		
TP3	A-6		
TP4	A-6		

RF-31 BOARD (PCM-7050)
(1-637-271-13)
Component Side

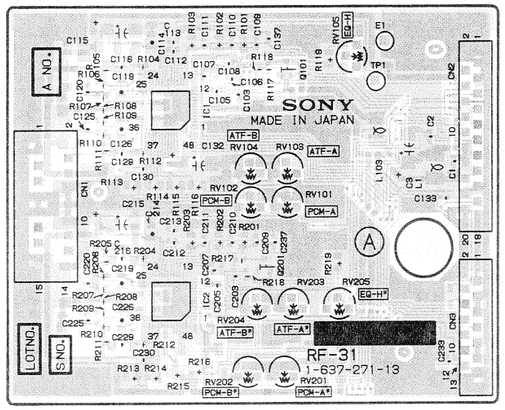

SOLDER SIDE PATTERN 1-637-271-13
COMPONENT SIDE PATTERN 1-637-271-13

Solder Side

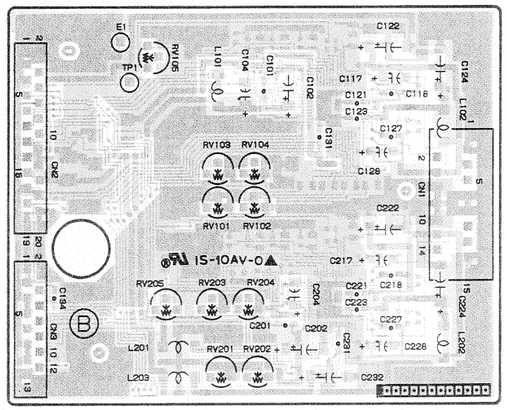

SOLDER SIDE PATTERN 1-637-271-13
COMPONENT SIDE PATTERN 1-637-271-13

RM-77 BOARD (PCM-7050)
(1-637-272-11)
Component Side

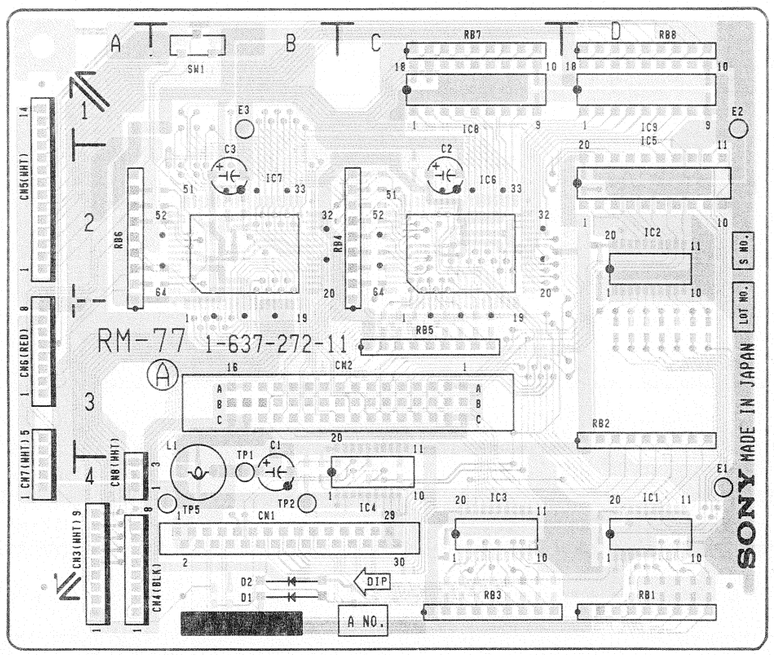

E1	D-4
E2	D-1
E3	B-1
D1	B-4
D2	B-4
IC1	D-4
IC2	D-2
IC3	C-4
IC4	C-4
IC5	D-2
IC6	C-2
IC7	B-2
IC8	C-1
IC9	D-1
SW1	B-1
TP1	B-4
TP2	B-4
TP5	B-4

SOLDER SIDE PATTERN 1-637-272-11
COMPONENT SIDE PATTERN 1-637-272-11

Solder Side

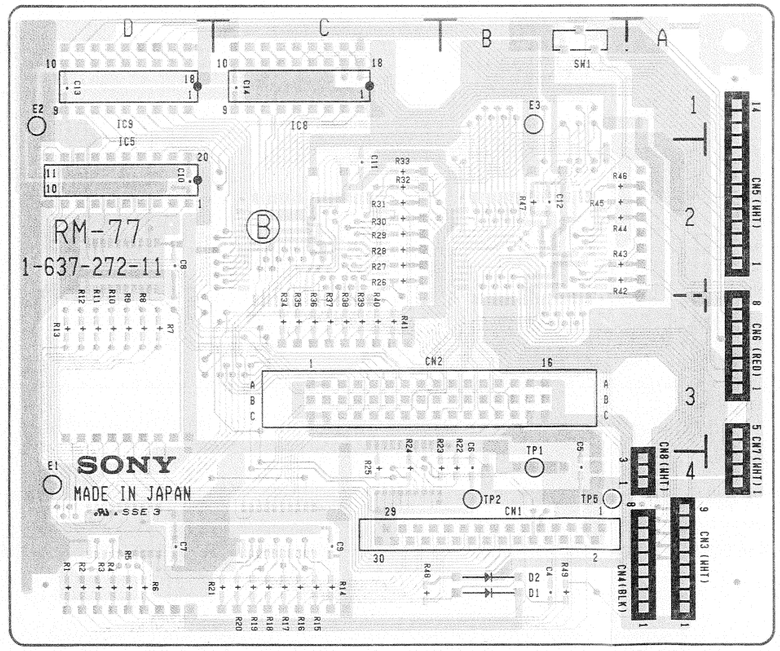

E1	D-4
E2	D-1
E3	B-1
D1	B-4
D2	B-4
IC5	D-2
IC8	C-1
IC9	D-1
TP1	B-4
TP2	B-4
TP5	B-4

SOLDER SIDE PATTERN 1-637-272-11
COMPONENT SIDE PATTERN 1-637-272-11

SP-13 SP-13

SP-13 BOARD (PCM-7050)
(1-637-265-11)
Component Side

Serial No. UC 20001 to 20025
EK 50001 to 50065

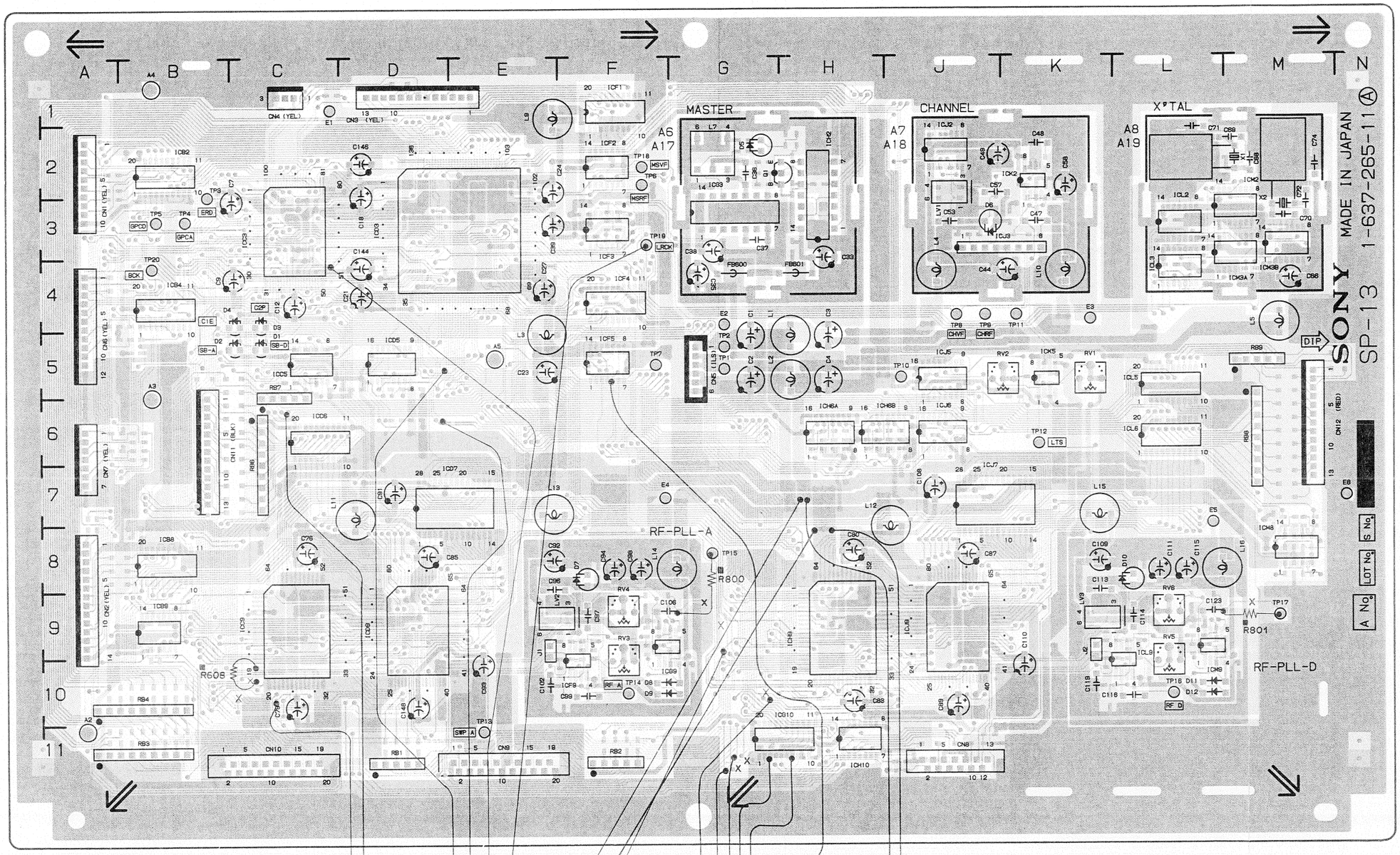

SOLDER SIDE PATTERN 1-637-265-11
COMPONENT SIDE PATTERN 1-637-265-11

B-40-1(a)

DUS-447 BOARD (PCM-7050)

(1-640-801-11)
Component Side

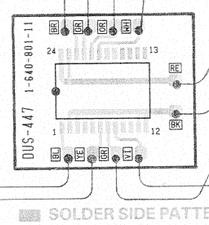

SOLDER SIDE PATTERN 1-640-801-11

DUS-316 BOARD (PCM-7050)
(KO-16 BOARD)

(1-639-523-11)
Component Side

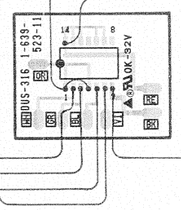

SOLDER SIDE PATTERN 1-639-523-11

B-41-1(a)

Applied Serial No. UC 20001 to 20015 EK 50001 to 50035	
Jumpers that have been soldered or cut.	ICC9-18 ——✕—— ICB

Applied Serial No. UC 20016 to 20025 EK 50036 to 50065	
Jumpers that have been soldered or cut.	ICG10-3 ——✕—— ICD ICG10-7 ——✕—— ICJ C106 ——✕—— TP15 C123 ——✕—— TP17
Parts marked with ▯ that have been installed on the component side.	▯ R800 ▯ R801

Applied Serial No. UC 20001 to 20025 EK 50001 to 50065	
Jumpers that have been soldered or cut.	ICG7-14 —— +5 ICG7-7 —— GND ICG7-1,4 —— IC ICG7-2 —— ICD ICG7-3 —— ICG ICG7-5 —— ICJ ICG7-6 —— ICG ICD3-47 ——✕—— ICC ICD3-46 ——✕—— ICH ICC3-43 ——✕—— ICJ ICF6-1 —— ICC
Parts that have been added.	ICG7 (DUS-316 B ICF6 (DUS-447 Bo

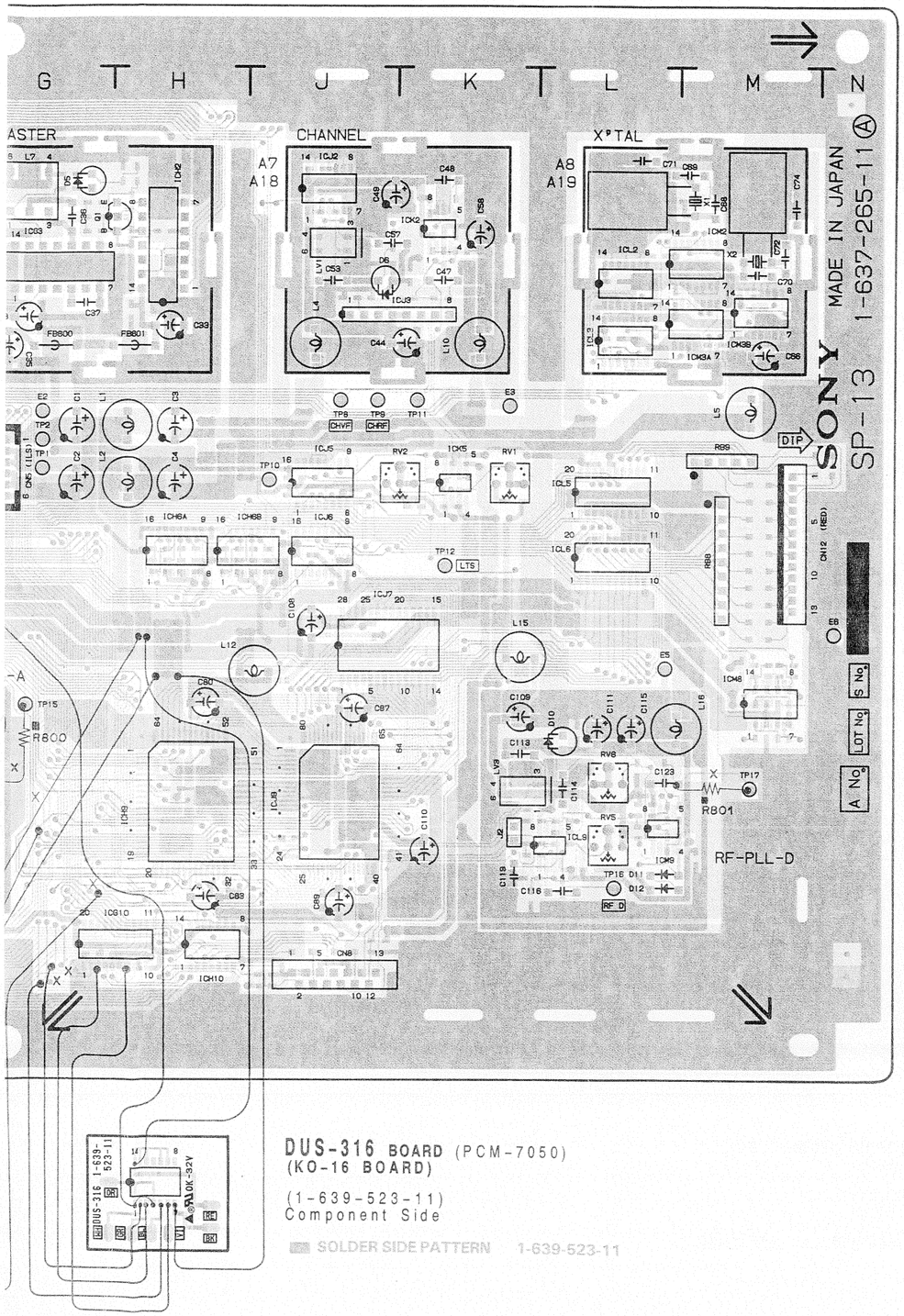

DUS-316 BOARD (PCM-7050)
(KO-16 BOARD)

(1-639-523-11)
Component Side

SOLDER SIDE PATTERN 1-639-523-11

B-41-1(a)

Applied Serial No. UC 20001 to 20015 EK 50001 to 50035	
Jumpers that have been soldered or cut.	ICC9-18 ⟶✕⟵ ICB8-5

Applied Serial No. UC 20016 to 20025 EK 50036 to 50065	
Jumpers that have been soldered or cut.	ICG10-3 ⟶✕⟵ ICD9-25 ICG10-7 ⟶✕⟵ ICJ9-25 C106 ⟶✕⟵ TP15 C123 ⟶✕⟵ TP17
Parts marked with ▲ that have been installed on the component side.	▲ R800 ▲ R801

Applied Serial No.UC 20001 to 20025 EK 50001 to 50065		
Jumpers that have been soldered or cut.	ICG7-14 —— +5V(RED) ICG7-7 —— GND(BLK) ICG7-1,4 —— ICF5-5(ORG) ICG7-2 —— ICD9-25(WHT) ICG7-3 —— ICG10-3(GRY) ICG7-5 —— ICJ9-25(BLU) ICG7-6 —— ICG10-7(VIO) ICD3-47 ⟶✕⟵ ICC9-29 ICD3-46 ⟶✕⟵ ICH9-29 ICC3-43 ⟶✕⟵ ICJ9-32 ICF6-1 —— ICC3-43(BLU)	ICF6-2 —— GND(BLK) ICF6-3 —— GND(BLK) ICF6-6 —— ICC9-29(YEL) ICF6-7 —— ICH9-29(GRY) ICF6-8 —— ICJ9-32(VIO) ICF6-11 —— GND(BLK) ICF6-12 —— GND(BLK) ICF6-19 —— ICC9-27(WHT) ICF6-20 —— ICC3-54(ORG) ICF6-21 —— ICD3-46(GRY) ICF6-22 —— ICD3-47(BRO) ICF6-24 —— +5V(RED)
Parts that have been added.	ICG7 [DUS-316 Board (KO-16 Board)] ICF6 [DUS-447 Board]	

D1	C-5	ICJ3	J-3	X1	M-2
D2	B-5	ICJ5	J-5	X2	M-3
D3	C-4	ICJ6	J-6		
D4	B-4	ICJ7	J-7		
D5	G-2	ICJ9	J-9		
D6	J-3	ICK2	K-2		
D7	F-8	ICK5	K-5		
D8	F-10	ICL2	L-3		
D9	F-10	ICL3	L-4		
D10	L-8	ICL5	L-5		
D11	L-10	ICL6	L-6		
D12	L-10	ICL9	L-9		
		ICM2	M-2		
E1	C-1	ICM3A	M-4		
E2	G-4	ICM3B	M-4		
E3	K-4	ICM8	M-8		
E4	F-7	ICM9	L-10		
E5	L-7				
E6	N-7	Q1	G-2		
ICB2	B-2	RV1	K-5		
ICB4	B-4	RV2	J-5		
ICB8	B-8	RV3	F-9		
ICB9	B-9	RV4	F-9		
ICC3	C-3	RV5	L-9		
ICC5	C-5	RV6	L-9		
ICC6	C-6				
ICC9	C-9	TP1	G-5		
ICD3	D-3	TP2	G-5		
ICD5	D-5	TP3	B-2		
ICD7	D-7	TP4	B-3		
ICD9	D-9	TP5	B-3		
ICF1	F-1	TP6	F-2		
ICF2	F-2	TP7	F-5		
ICF3	F-3	TP8	J-4		
ICF4	F-4	TP9	J-4		
ICF5	F-5	TP10	J-5		
ICF9	F-10	TP11	K-4		
ICG3	G-2	TP12	K-6		
ICG9	F-10	TP13	E-10		
ICG10	G-10	TP14	F-10		
ICH2	H-2	TP15	G-8		
ICH6A	H-6	TP16	L-10		
ICH6B	H-6	TP17	M-9		
ICH9	H-9	TP18	F-2		
ICH10	H-11	TP19	F-3		
ICJ2	J-2	TP20	B-4		

B-42-1(a)

SP-13 SP-13

SP-13 BOARD (PCM-7050)
(1-637-265-11)
Solder Side

Serial No. UC 20001 to 20025
EK 50001 to 50065

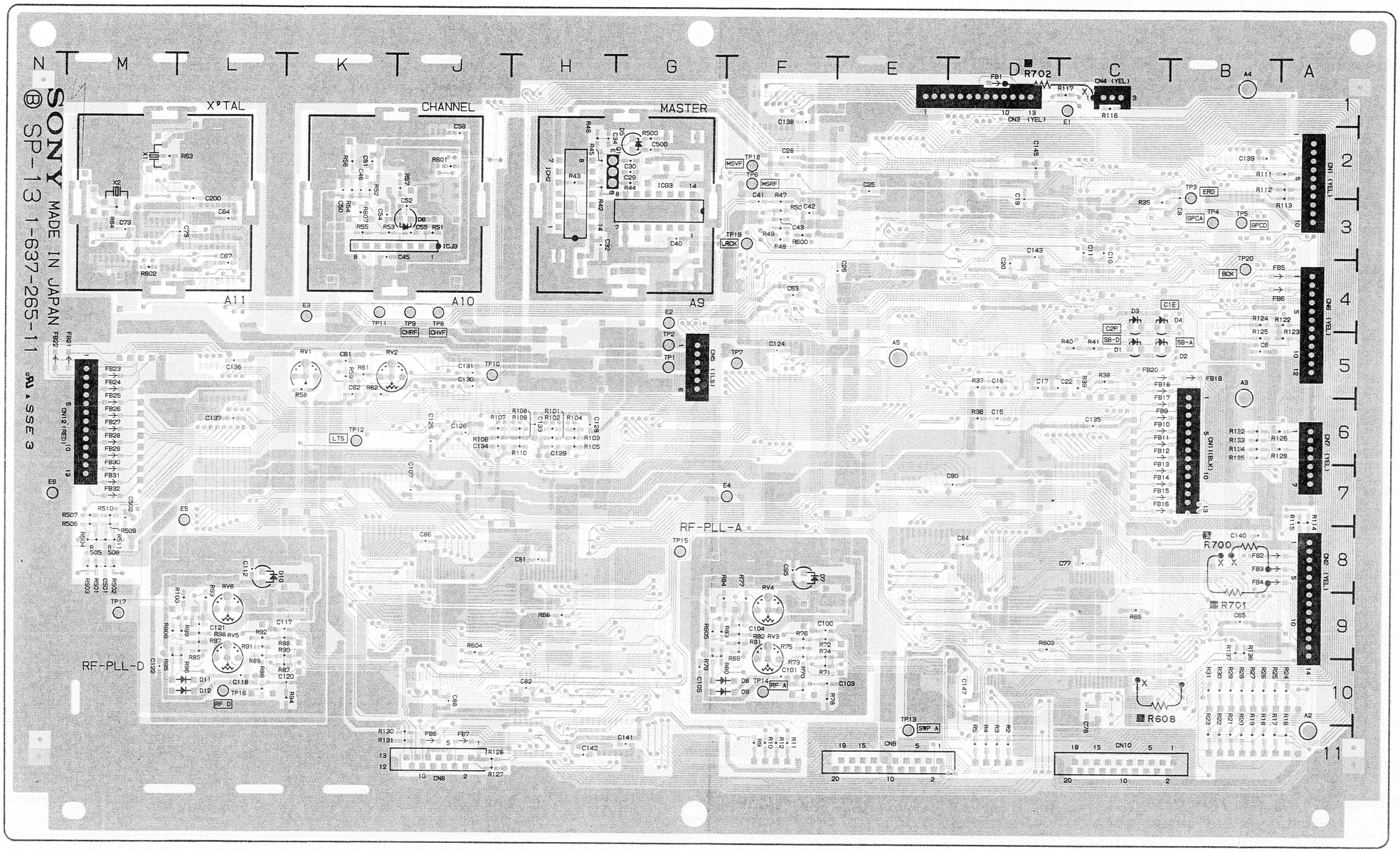

SOLDER SIDE PATTERN 1-637-265-11
COMPONENT SIDE PATTERN 1-637-265-11

Applied Serial No. UC 20016 to 20025 EK 50036 to 50065	
Jumpers that have been soldered or cut.	ICC9-18 —✕— IC
Parts marked with ‡ that have been installed on the solder side.	‡R608

Applied Serial No. UC 20001 to 20025 EK 50001 to 50065	
Jumpers that have been soldered or cut.	FB1 —✕— ICB8- FB3 —✕— ICB8- FB4 —✕— ICB8-
Parts marked with ‡ that have been installed on the solder side.	‡R700 ‡R701 ‡R702

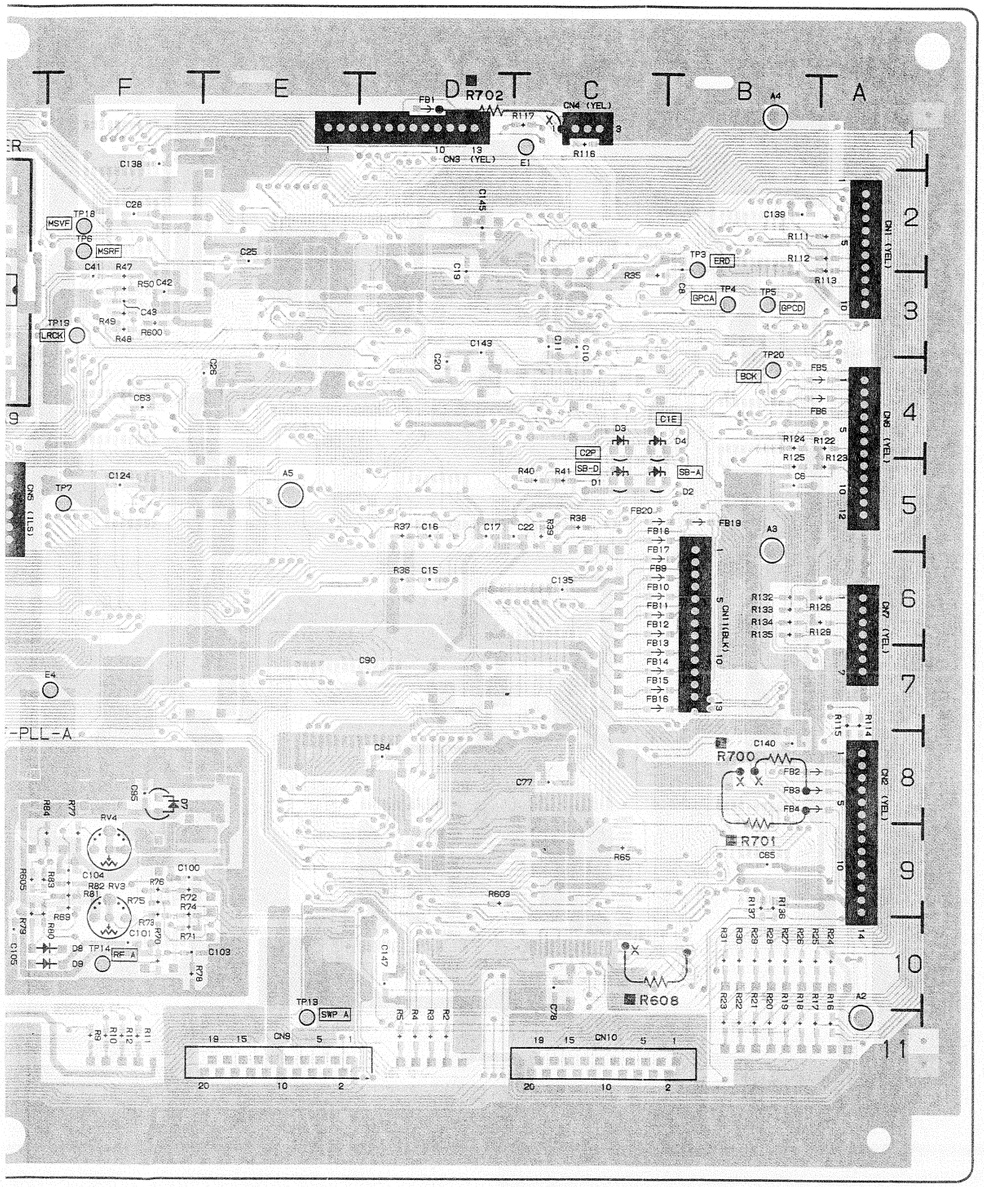

D1	C-5	ICJ3	J-3	X1	M-2
D2	B-5	ICJ5	J-5	X2	M-3
D3	C-4	ICJ6	J-6		
D4	B-4	ICJ7	J-7		
D5	G-2	ICJ9	J-9		
D6	J-3	ICK2	K-2		
D7	F-8	ICK5	K-5		
D8	F-10	ICL2	L-3		
D9	F-10	ICL3	L-4		
D10	L-8	ICL5	L-5		
D11	L-10	ICL6	L-6		
D12	L-10	ICL9	L-9		
		ICM2	M-2		
E1	C-1	ICM3A	M-4		
E2	G-4	ICM3B	M-4		
E3	K-4	ICM8	M-8		
E4	F-7	ICM9	L-10		
E5	L-7				
E6	N-7	Q1	G-2		
ICB2	B-2	RV1	K-5		
ICB4	B-4	RV2	J-5		
ICB8	B-8	RV3	F-9		
ICB9	B-9	RV4	F-9		
ICC3	C-3	RV5	L-9		
ICC5	C-5	RV6	L-9		
ICC6	C-6				
ICC9	C-9	TP1	G-5		
ICD3	D-3	TP2	G-5		
ICD5	D-5	TP3	B-2		
ICD7	D-7	TP4	B-3		
ICD9	D-9	TP5	B-3		
ICF1	F-1	TP6	F-2		
ICF2	F-2	TP7	F-5		
ICF3	F-3	TP8	J-4		
ICF4	F-4	TP9	J-4		
ICF5	F-5	TP10	J-5		
ICF9	F-10	TP11	K-4		
ICG3	G-2	TP12	K-6		
ICG9	F-10	TP13	E-10		
ICG10	G-10	TP14	F-10		
ICH2	H-2	TP15	G-8		
ICH6A	H-6	TP16	L-10		
ICH6B	H-6	TP17	M-9		
ICH9	H-9	TP18	F-2		
ICH10	H-11	TP19	F-3		
ICJ2	J-2	TP20	B-4		

Applied Serial No. UC 20016 to 20025 EK 50036 to 50065	
Jumpers that have been soldered or cut.	ICC9-18 —✕— ICB8-5
Parts marked with ® that have been installed on the solder side.	®R608

Applied Serial No. UC 20001 to 20025 EK 50001 to 50065	
Jumpers that have been soldered or cut.	FB1 —✕— ICB8-12 FB3 —✕— ICB8-16 FB4 —✕— ICB8-14
Parts marked with ® that have been installed on the solder side.	®R700 ®R701 ®R702

SP-13 SP-13

SP-13 BOARD (PCM-7050)
(1-637-265-12)
Component Side

Serial No. UC 20026 to 20055
EK 50066 to 50175

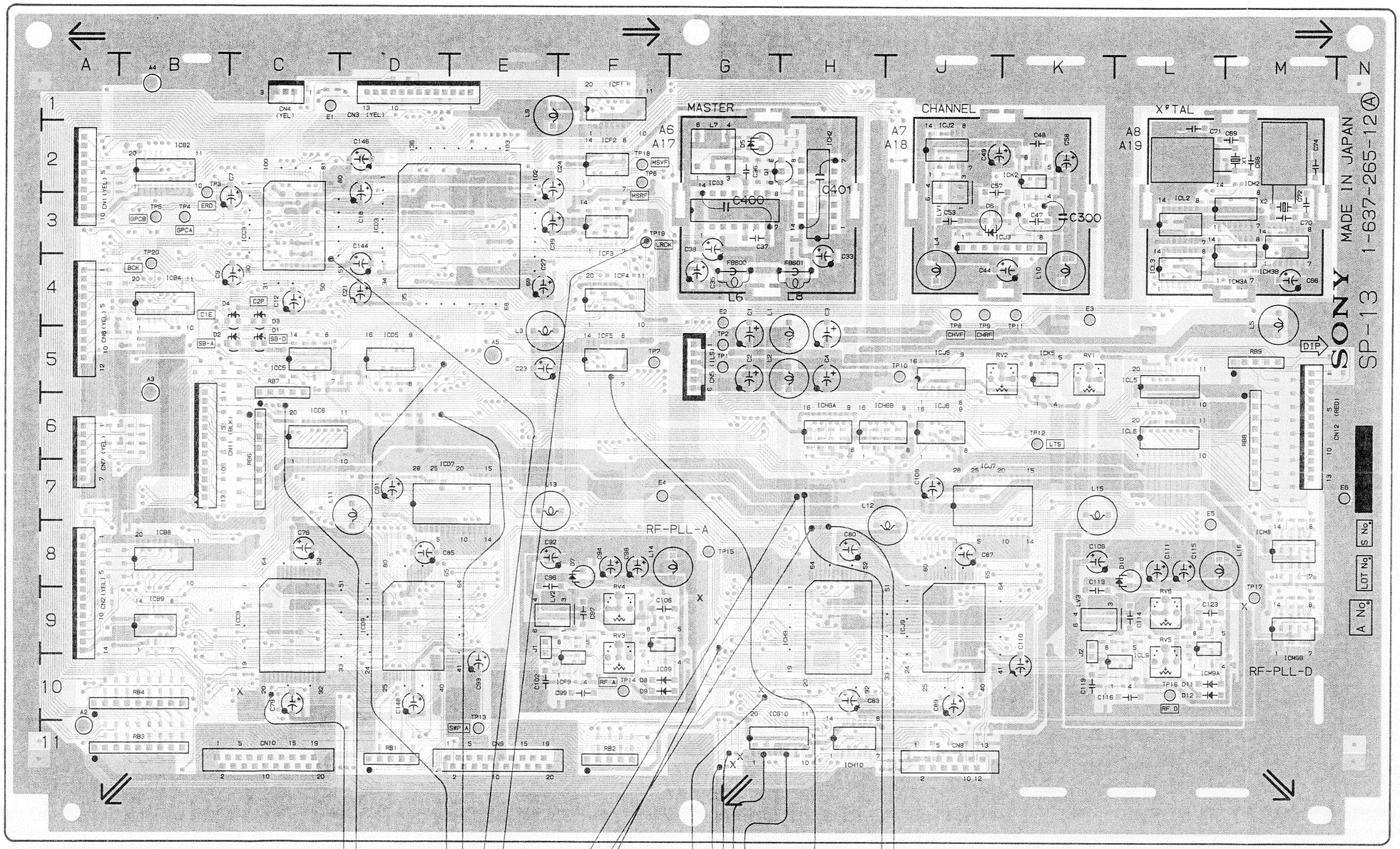

Applied Serial No. UC 20026 to 20055 EK 50066 to 50175	
Jumpers that have been soldered or cut.	ICG10-3 → ICD9 ICG10-7 → ICJ9 C106 → TP15 C123 → TP17
Parts that have been added.	ICG7 (DUS-316 Boa ICF6 (DUS-447 Boar

Applied Serial No. UC; 20036 and higher EK; 50116 and higher	
Parts that have been changed.	FB600 → L6 FB6
Parts that have been added.	C300,400,401

DUS-447 BOARD (PCM-7050)
(1-640-801-11)
Component Side

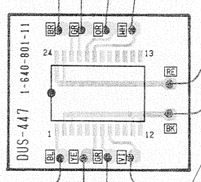

B-40-1(b)

SOLDER SIDE PATTERN 1-640-801-11

DUS-316 BOARD (PCM-7050)
(KO-16 BOARD)
(1-639-523-11)
Component Side

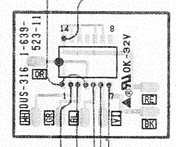

SOLDER SIDE PATTERN 1-639-523-11

B-41-1(b)

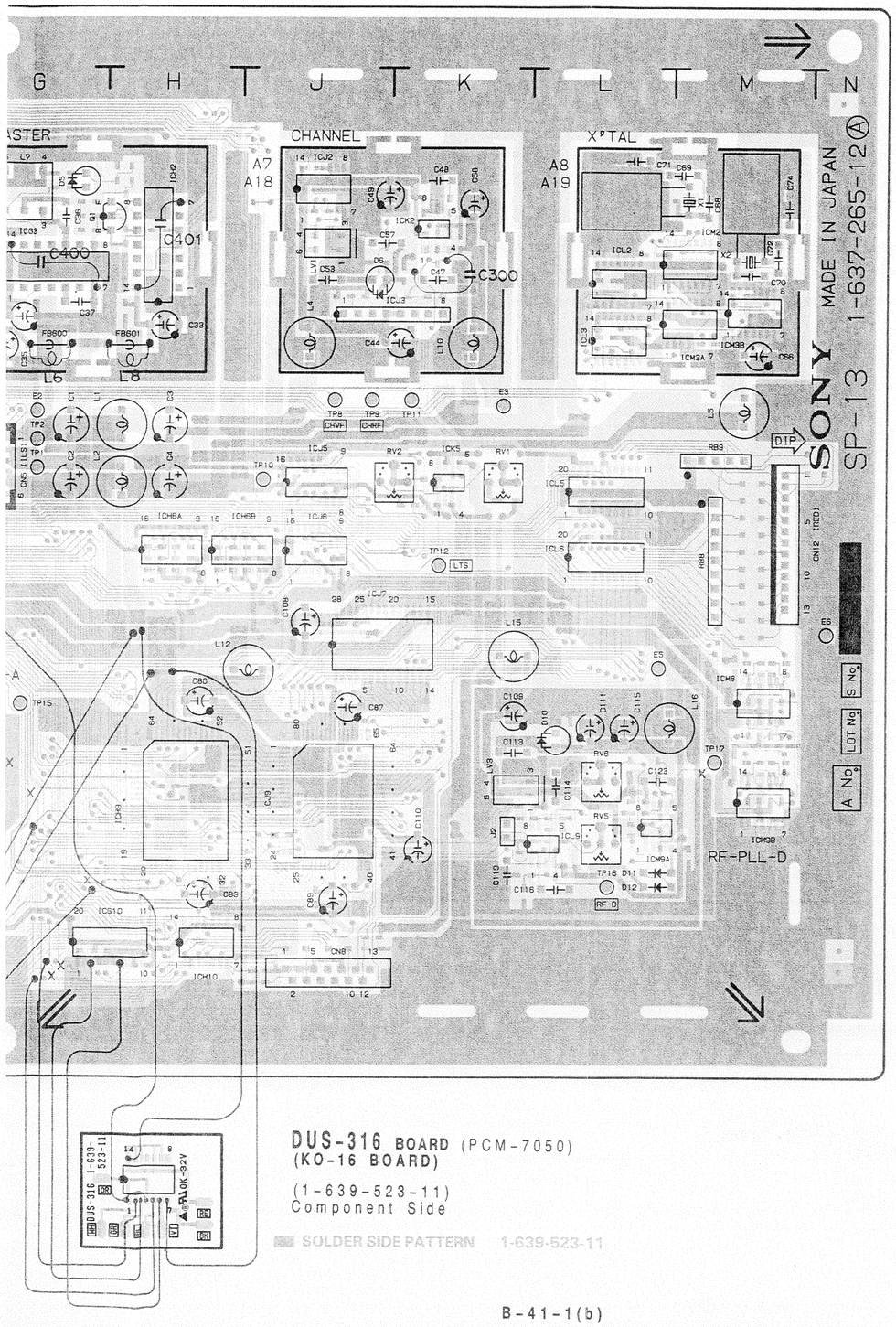

DUS-316 BOARD (PCM-7050)
(KO-16 BOARD)

(1-639-523-11)
Component Side

SOLDER SIDE PATTERN 1-639-523-11

B-41-1(b)

Applied Serial No. UC 20026 to 20055 EK 50066 to 50175			
Jumpers that have been soldered or cut.	ICG10-3 ⟶✕⟵ ICD9-25 ICG10-7 ⟶✕⟵ ICJ9-25 C106 ⟶✕⟵ TP15 C123 ⟶✕⟵ TP17	ICG7-14 —— +5V(RED) ICG7-7 —— GND(BLK) ICG7-1,4 —— ICF5-5(ORG) ICG7-2 —— ICD9-25(WHT) ICG7-3 —— ICG10-3(GRY) ICG7-5 —— ICJ9-25(BLU) ICG7-6 —— ICG10-7(VIO) ICD3-47 ⟶✕⟵ ICC9-29 ICD3-46 ⟶✕⟵ ICH9-29 ICC3-43 ⟶✕⟵ ICJ9-32 ICF6-1 —— ICC3-43(BLU)	ICF6-2 —— GND(BLK) ICF6-3 —— GND(BLK) ICF6-5 —— ICC9-29(YEL) ICF6-7 —— ICH9-29(GRY) ICF6-8 —— ICJ9-32(VIO) ICF6-11 —— GND(BLK) ICF6-12 —— GND(BLK) ICF6-19 —— ICC9-27(WHT) ICF6-20 —— ICC3-54(ORG) ICF6-21 —— ICD3-46(GRY) ICF6-22 —— ICD3-47(BRO) ICF6-24 —— +5V(RED)
Parts that have been added.	ICG7 (DUS-316 Board(KO-16 Board)) ICF6 (DUS-447 Board)		

Applied Serial No. UC; 20036 and higher EK; 50116 and higher	
Parts that have been changed.	FB600 → L6 FB601 → L8
Parts that have been added.	C300,400,401

D1	C-5	ICJ3	J-3	X1	M-2
D2	B-5	ICJ5	J-5	X2	M-3
D3	C-4	ICJ6	J-6		
D4	B-4	ICJ7	J-7		
D5	G-2	ICJ9	J-9		
D6	J-3	ICK2	K-2		
D7	F-8	ICK5	K-5		
D8	F-10	ICL2	L-3		
D9	F-10	ICL3	L-4		
D10	L-8	ICL5	L-5		
D11	L-10	ICL6	L-6		
D12	L-10	ICL9	L-9		
		ICM2	M-2		
E1	C-1	ICM3A	M-4		
E2	G-4	ICM3B	M-4		
E3	K-4	ICM8	M-8		
E4	F-7	ICM9	L-10		
E5	L-7				
E6	N-7	Q1	G-2		
ICB2	B-2	RV1	K-5		
ICB4	B-4	RV2	J-5		
ICB8	B-8	RV3	F-9		
ICB9	B-9	RV4	F-9		
ICC3	C-3	RV5	L-9		
ICC5	C-5	RV6	L-9		
ICC6	C-6				
ICC9	C-9	TP1	G-5		
ICD3	D-3	TP2	G-5		
ICD5	D-5	TP3	B-2		
ICD7	D-7	TP4	B-3		
ICD9	D-9	TP5	B-3		
ICF1	F-1	TP6	F-2		
ICF2	F-2	TP7	F-5		
ICF3	F-3	TP8	J-4		
ICF4	F-4	TP9	J-4		
ICF5	F-5	TP10	J-5		
ICF9	F-10	TP11	K-4		
ICG3	G-2	TP12	K-6		
ICG9	F-10	TP13	E-10		
ICG10	G-10	TP14	F-10		
ICH2	H-2	TP15	G-8		
ICH6A	H-6	TP16	L-10		
ICH6B	H-6	TP17	M-9		
ICH9	H-9	TP18	F-2		
ICH10	H-11	TP19	F-3		
ICJ2	J-2	TP20	B-4		

B-42-1(b)

SP-13 SP-13

SP-13 BOARD (PCM-7050)
(1-637-265-12)
Solder Side

Serial No. UC 20026 to 20055
EK 50066 to 50175

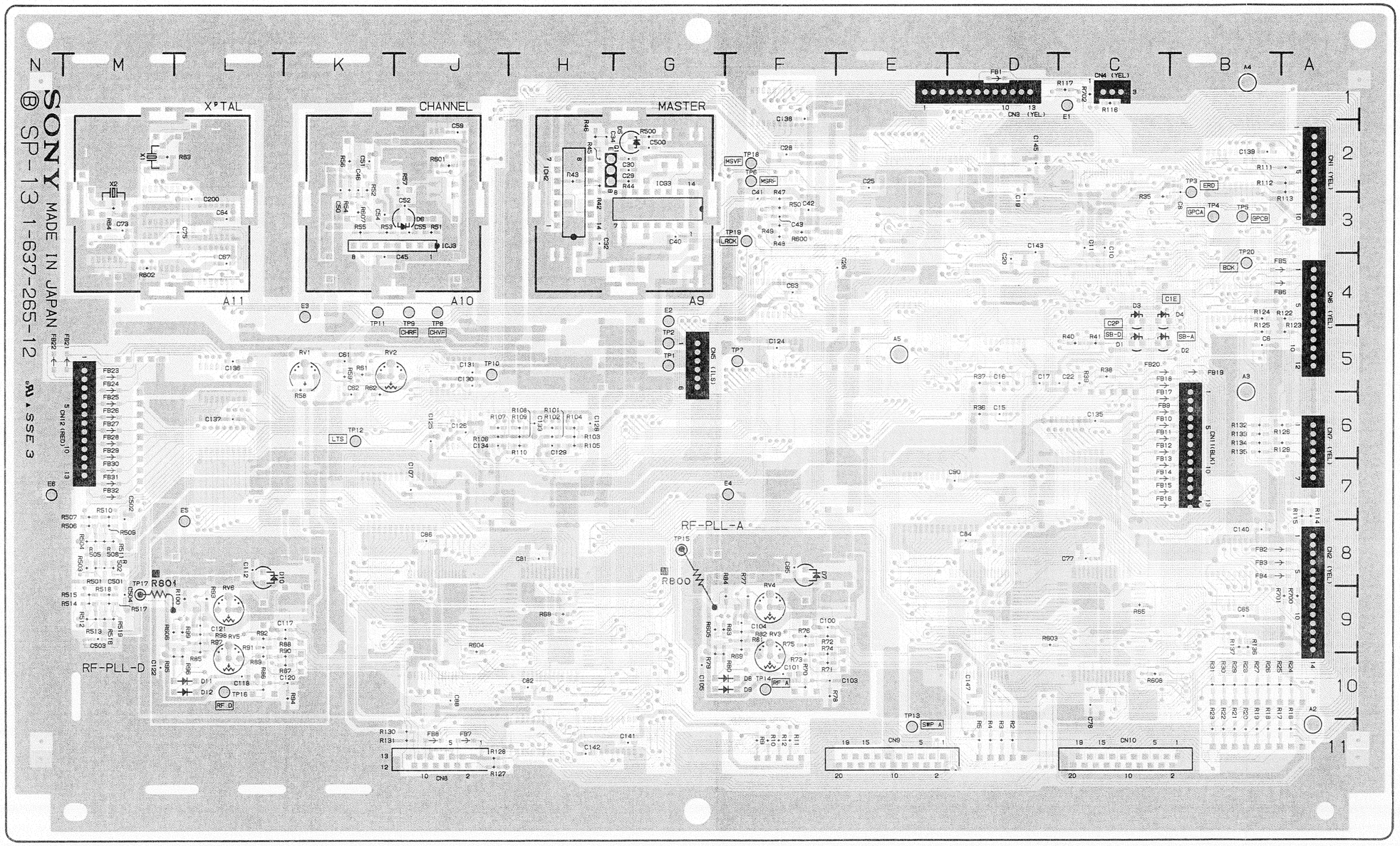

SOLDER SIDE PATTERN 1-637-265-12
COMPONENT SIDE PATTERN 1-637-265-12

Applied Serial No. UC 20026 to 20055 EK 50066 to 50175	
Parts marked with ‡ that have been installed on the solder side.	‡ R800 ‡ R801

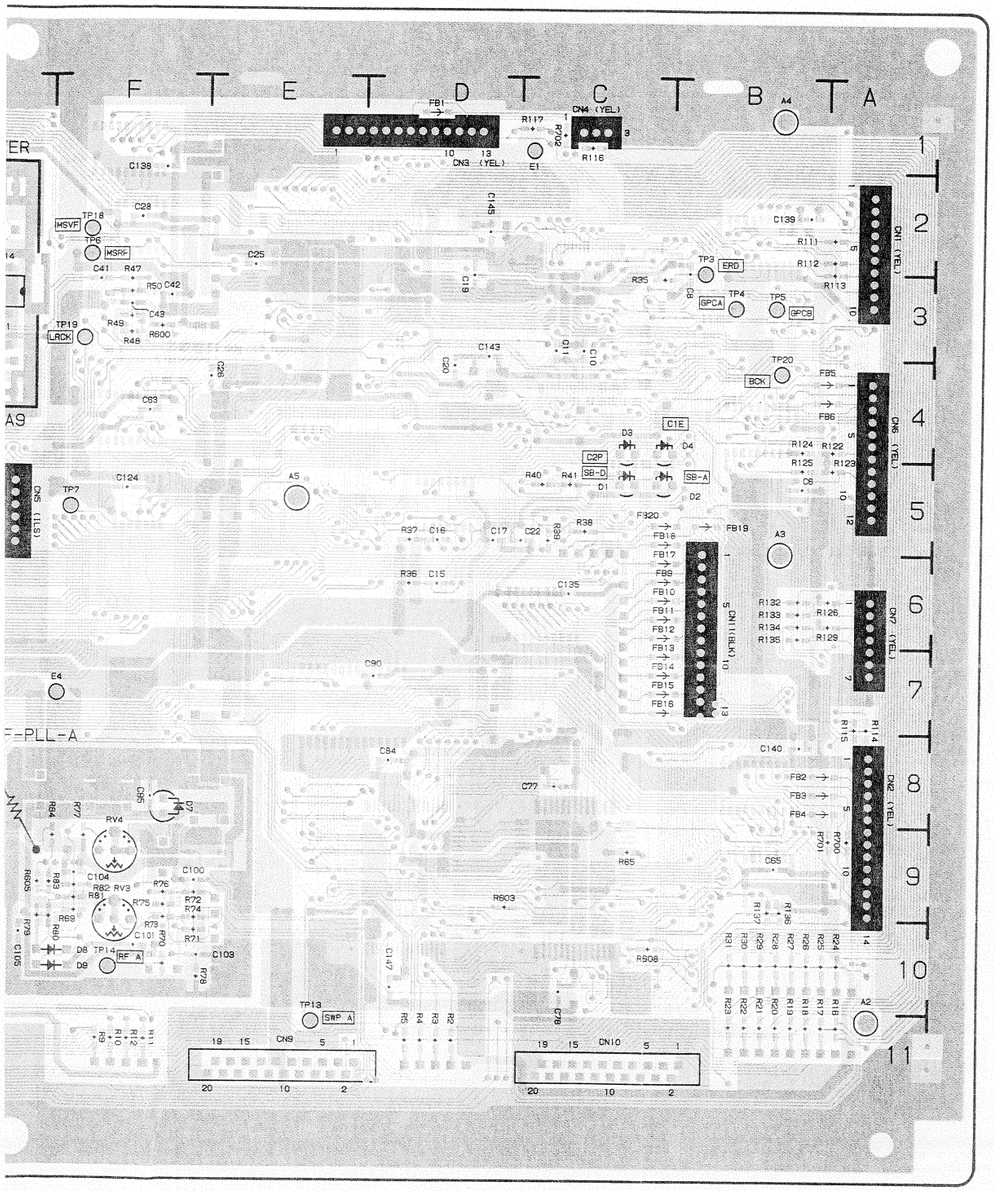

D1	C-5	ICJ3	J-3	X1	M-2
D2	B-5	ICJ5	J-5	X2	M-3
D3	C-4	ICJ6	J-6		
D4	B-4	ICJ7	J-7		
D5	G-2	ICJ9	J-9		
D6	J-3	ICK2	K-2		
D7	F-8	ICK5	K-5		
D8	F-10	ICL2	L-3		
D9	F-10	ICL3	L-4		
D10	L-8	ICL5	L-5		
D11	L-10	ICL6	L-6		
D12	L-10	ICL9	L-9		
		ICM2	M-2		
E1	C-1	ICM3A	M-4		
E2	G-4	ICM3B	M-4		
E3	K-4	ICM8	M-8		
E4	F-7	ICM9	L-10		
E5	L-7				
E6	N-7	Q1	G-2		
ICB2	B-2	RV1	K-5		
ICB4	B-4	RV2	J-5		
ICB8	B-8	RV3	F-9		
ICB9	B-9	RV4	F-9		
ICC3	C-3	RV5	L-9		
ICC5	C-5	RV6	L-9		
ICC6	C-6				
ICC9	C-9	TP1	G-5		
ICD3	D-3	TP2	G-5		
ICD5	D-5	TP3	B-2		
ICD7	D-7	TP4	B-3		
ICD9	D-9	TP5	B-3		
ICF1	F-1	TP6	F-2		
ICF2	F-2	TP7	F-5		
ICF3	F-3	TP8	J-4		
ICF4	F-4	TP9	J-4		
ICF5	F-5	TP10	J-5		
ICF9	F-10	TP11	K-4		
ICG3	G-2	TP12	K-6		
ICG9	F-10	TP13	E-10		
ICG10	G-10	TP14	F-10		
ICH2	H-2	TP15	G-8		
ICH6A	H-6	TP16	L-10		
ICH6B	H-6	TP17	M-9		
ICH9	H-9	TP18	F-2		
ICH10	H-11	TP19	F-3		
ICJ2	J-2	TP20	B-4		

Applied Serial No. UC 20026 to 20055 EK 50066 to 50175	
Parts marked with ※ that have been installed on the solder side.	※ R800 ※ R801

SP-13 SP-13

SP-13 BOARD (PCM-7050)
(1-637-265-13)
Component Side

Serial No. UC 20056 to 25010
EK 50176 to 55110

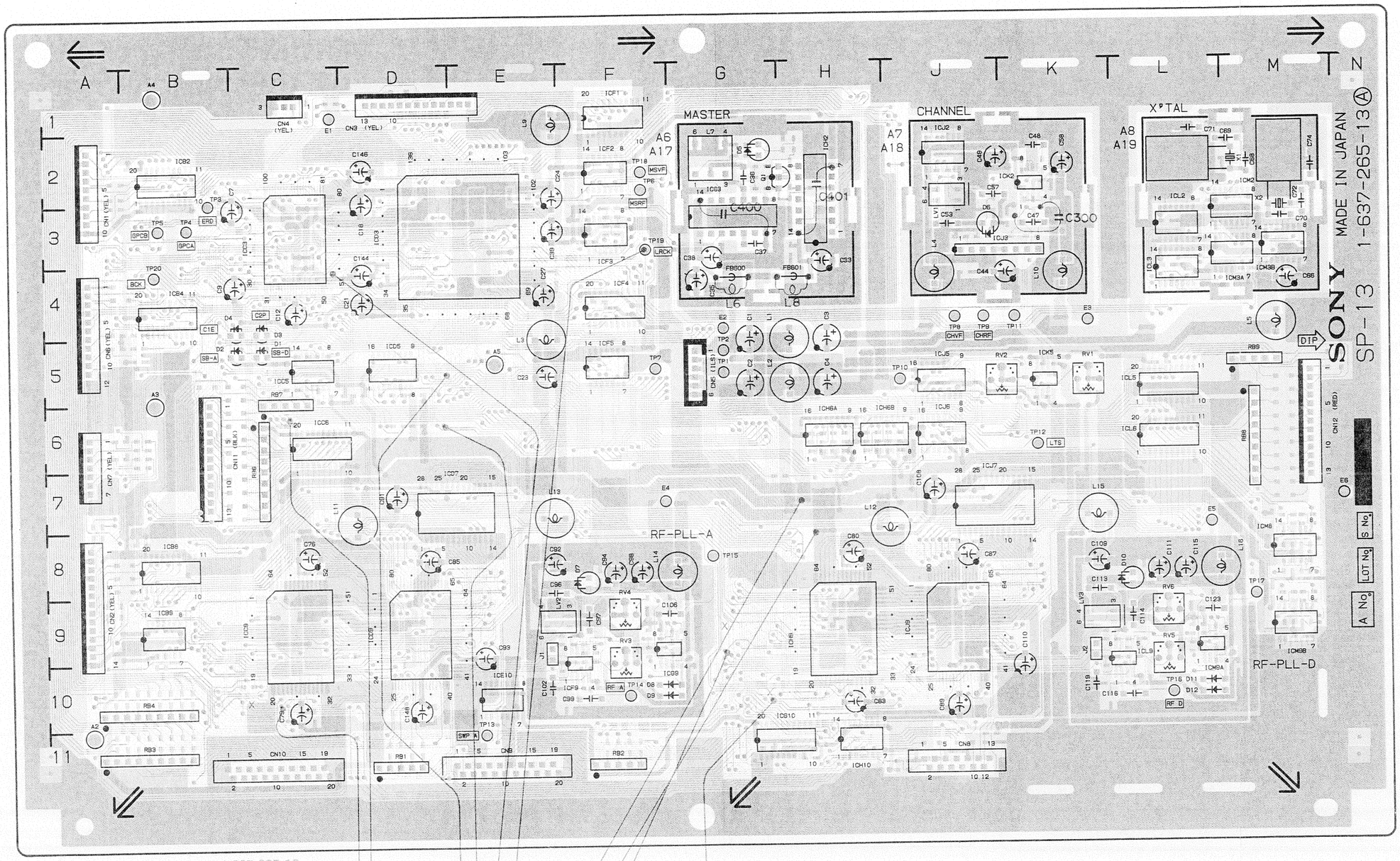

Applied Serial UC 20056 and higher EK 50176 and higher	
Parts that have been changed.	FB800 — L6 FB80
Parts that have been soldered or cut.	ICC3-43 — ICJ9- ICD3-46 — ICH9- ICD3-47 — ICC9- ICF6-1 — ICC3- ICF6-2 — GND(B ICF6-3 — GND(B ICF6-6 — ICC9- ICF6-7 — ICH9- ICF6-8 — ICJ9-
Parts that have been added.	C300,400,401 ICF6(DUS-447 Board

SOLDER SIDE PATTERN 1-637-265-13
COMPONENT SIDE PATTERN 1-637-265-12

DUS-447 BOARD (PCM-7050)
(1-640-801-11)
Component Side

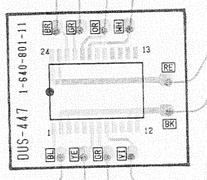

SOLDER SIDE PATTERN 1-640-801-11

B-40-1(c)

B-41-1(c)

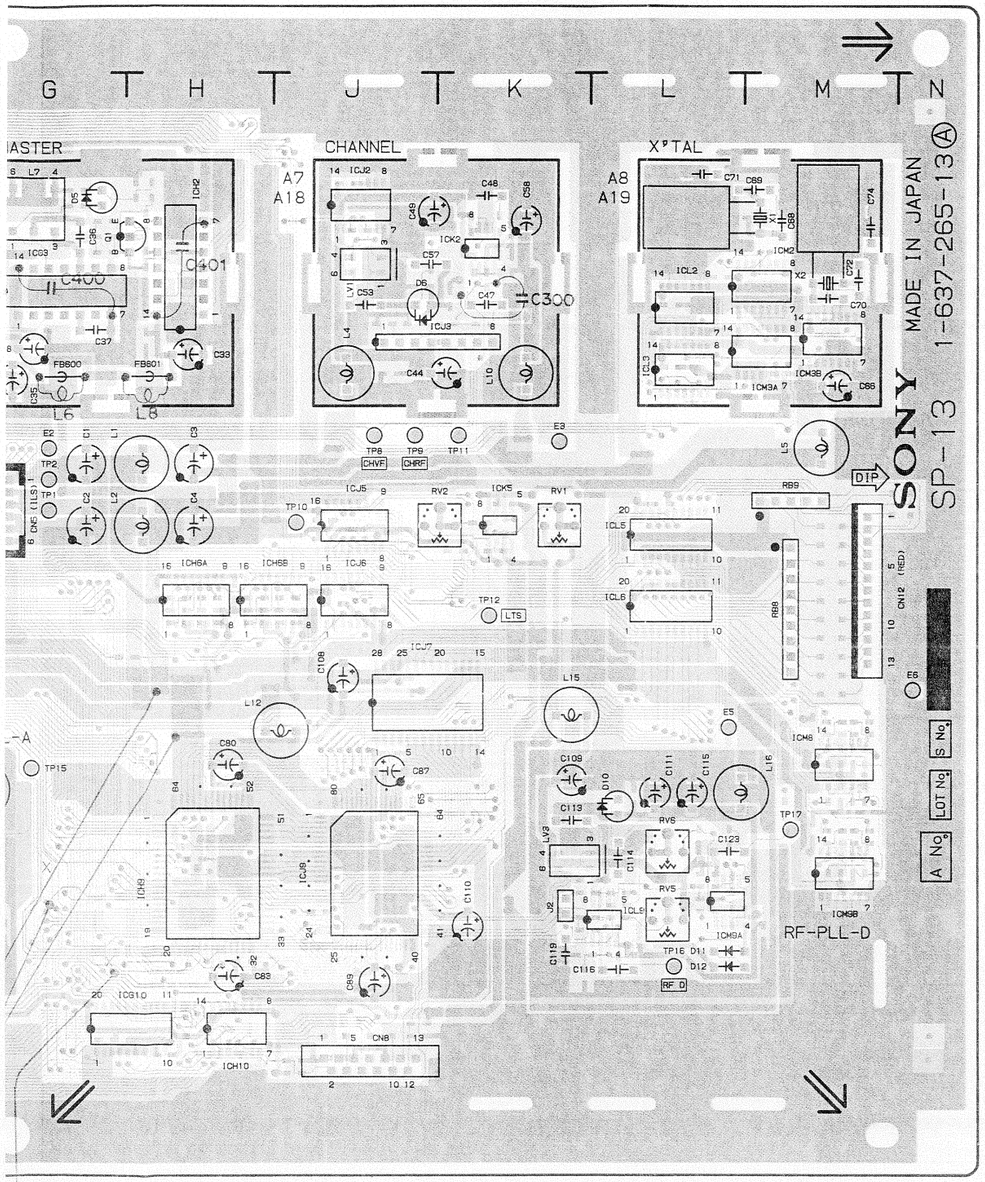

D1	C-5	ICJ3	J-3	X1	M-2
D2	B-5	ICJ5	J-5	X2	M-3
D3	C-4	ICJ6	J-6		
D4	B-4	ICJ7	J-7		
D5	G-2	ICJ9	J-9		
D6	J-3	ICK2	K-2		
D7	F-8	ICK5	K-5		
D8	F-10	ICL2	L-3		
D9	F-10	ICL3	L-4		
D10	L-8	ICL5	L-5		
D11	L-10	ICL6	L-6		
D12	L-10	ICL9	L-9		
		ICM2	M-2		
E1	C-1	ICM3A	M-4		
E2	G-4	ICM3B	M-4		
E3	K-4	ICM8	M-8		
E4	F-7	ICM9	L-10		
E5	L-7				
E6	N-7	Q1	G-2		
ICB2	B-2	RV1	K-5		
ICB4	B-4	RV2	J-5		
ICB8	B-8	RV3	F-9		
ICB9	B-9	RV4	F-9		
ICC3	C-3	RV5	L-9		
ICC5	C-5	RV6	L-9		
ICC6	C-6				
ICC9	C-9	TP1	G-5		
ICD3	D-3	TP2	G-5		
ICD5	D-5	TP3	B-2		
ICD7	D-7	TP4	B-3		
ICD9	D-9	TP5	B-3		
ICF1	F-1	TP6	F-2		
ICF2	F-2	TP7	F-5		
ICF3	F-3	TP8	J-4		
ICF4	F-4	TP9	J-4		
ICF5	F-5	TP10	J-5		
ICF9	F-10	TP11	K-4		
ICG3	G-2	TP12	K-6		
ICG9	F-10	TP13	E-10		
ICG10	G-10	TP14	F-10		
ICH2	H-2	TP15	G-8		
ICH6A	H-6	TP16	L-10		
ICH6B	H-6	TP17	M-9		
ICH9	H-9	TP18	F-2		
ICH10	H-11	TP19	F-3		
ICJ2	J-2	TP20	B-4		

Applied Serial UC 20056 and higher EK 50176 and higher	
Parts that have been changed.	FB600 — L6 FB601 — L8
Parts that have been soldered or cut.	ICC3-43 ⟶ ICJ9-32 ICD3-46 ⟶ ICH9-29 ICD3-47 ⟶ ICC9-29 ICF6-1 —— ICC3-43(BLU) ICF6-11 —— GND(BLK) ICF6-2 —— GND(BLK) ICF6-12 —— GND(BLK) ICF6-3 —— GND(BLK) ICF6-19 —— ICC9-27(WHT) ICF6-6 —— ICC9-29(YEL) ICF6-20 —— ICC3-54(ORG) ICF6-7 —— ICH9-29(GRY) ICF6-21 —— ICD3-46(GRY) ICF6-8 —— ICJ9-32(VIO) ICF6-22 —— ICD3-47(BRO) ICF6-24 —— +5V(RED)
Parts that have been added.	C300,400,401 ICF6(DUS-447 Board)

DUS-447 BOARD (PCM-7050)

(1-640-801-11)
Component Side

SOLDERSIDE PATTERN 1-640-801-11

SP-13 SP-13

SP-13 BOARD (PCM-7050)
(1-637-265-13)
Solder Side

Serial No. UC 20056 to 25010
EK 50176 to 55110

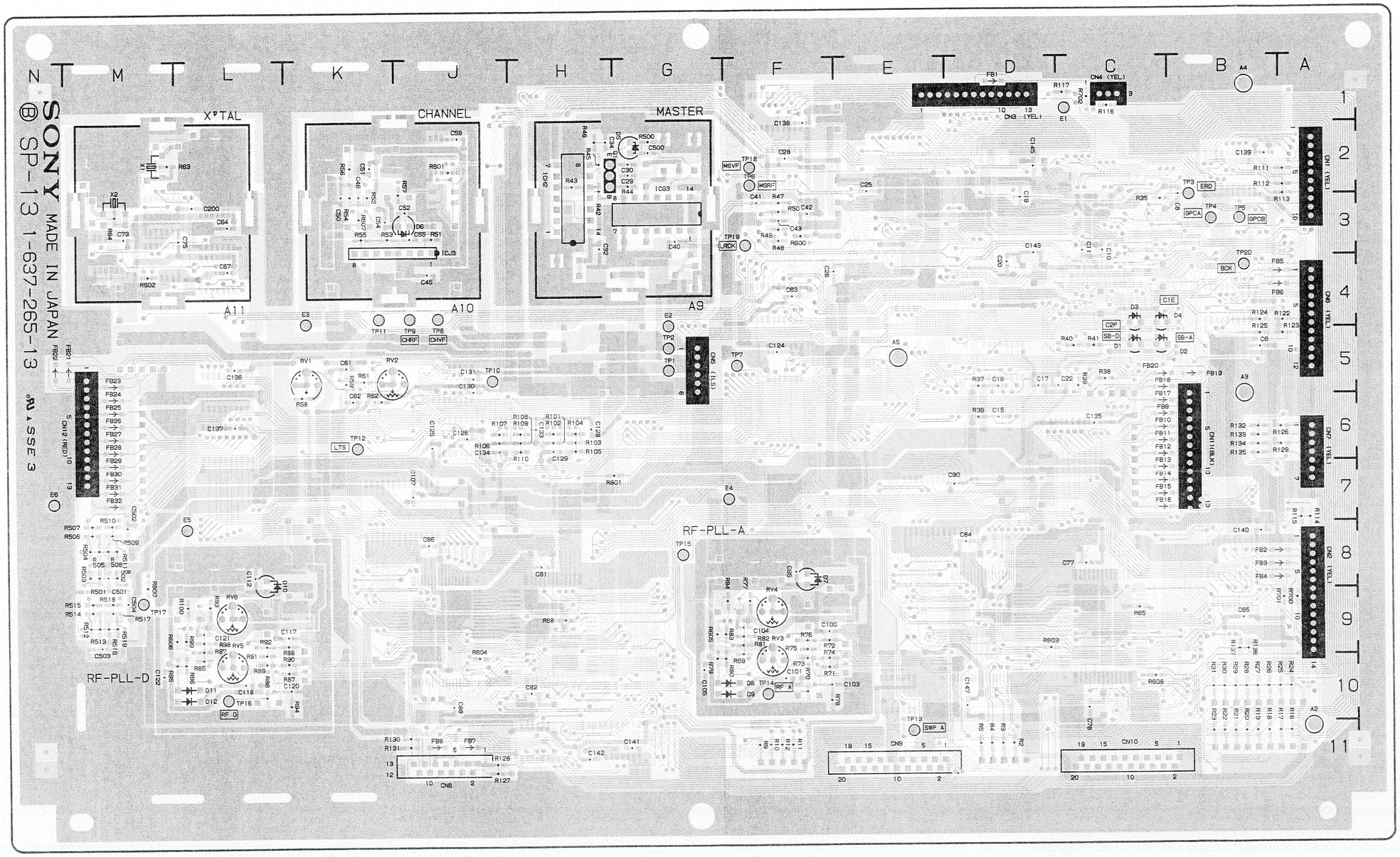

SOLDER SIDE PATTERN 1-637-265-13
COMPONENT SIDE PATTERN 1-637-265-13

B-40-2(c)

B-41-2(c)

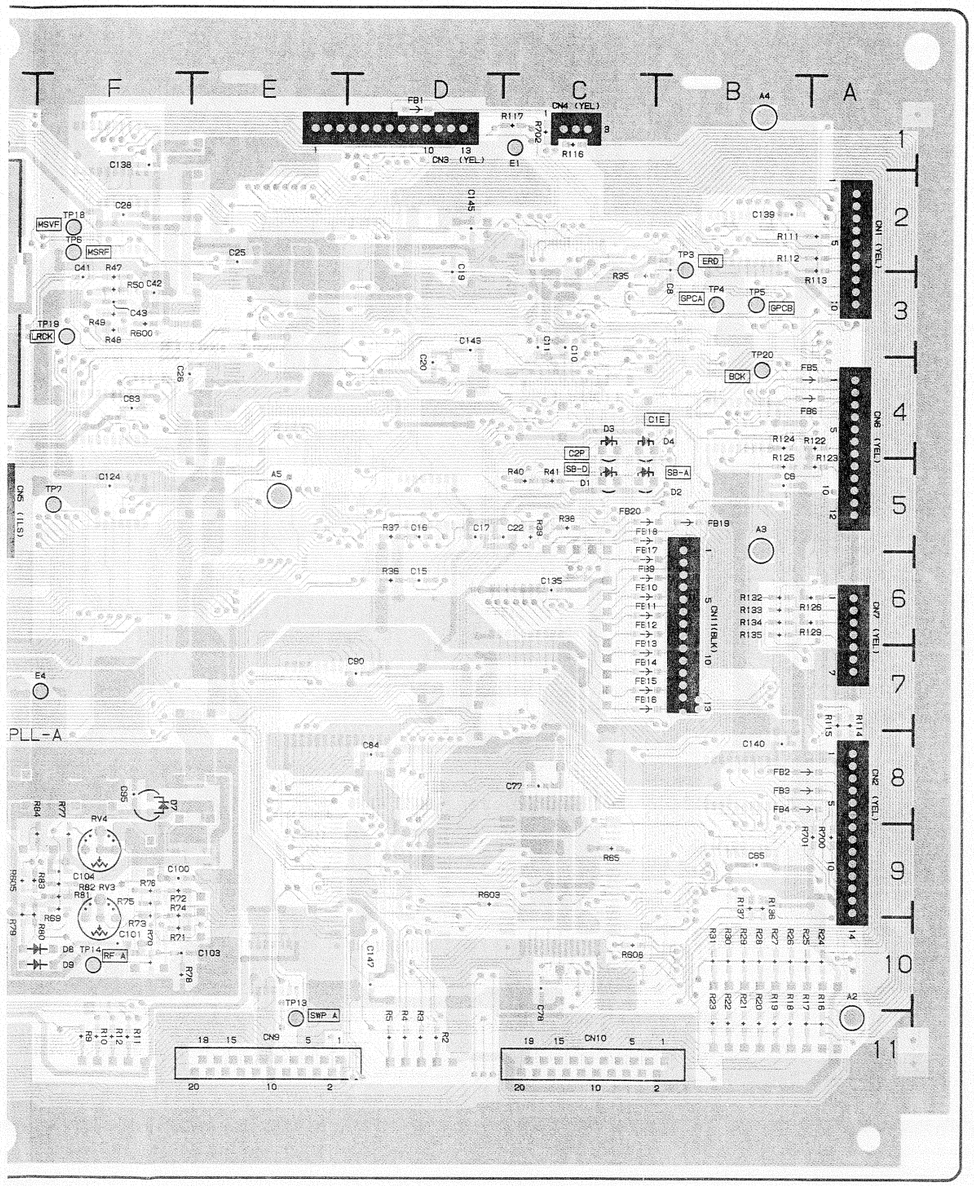

B-41-2(c)

D1	C-5	ICJ3	J-3	X1	M-2
D2	B-5	ICJ5	J-5	X2	M-3
D3	C-4	ICJ6	J-6		
D4	B-4	ICJ7	J-7		
D5	G-2	ICJ9	J-9		
D6	J-3	ICK2	K-2		
D7	F-8	ICK5	K-5		
D8	F-10	ICL2	L-3		
D9	F-10	ICL3	L-4		
D10	L-8	ICL5	L-5		
D11	L-10	ICL6	L-6		
D12	L-10	ICL9	L-9		
		ICM2	M-2		
E1	C-1	ICM3A	M-4		
E2	G-4	ICM3B	M-4		
E3	K-4	ICM8	M-8		
E4	F-7	ICM9	L-10		
E5	L-7				
E6	N-7	Q1	G-2		
ICB2	B-2	RV1	K-5		
ICB4	B-4	RV2	J-5		
ICB8	B-8	RV3	F-9		
ICB9	B-9	RV4	F-9		
ICC3	C-3	RV5	L-9		
ICC5	C-5	RV6	L-9		
ICC6	C-6				
ICC9	C-9	TP1	G-5		
ICD3	D-3	TP2	G-5		
ICD5	D-5	TP3	B-2		
ICD7	D-7	TP4	B-3		
ICD9	D-9	TP5	B-3		
ICF1	F-1	TP6	F-2		
ICF2	F-2	TP7	F-5		
ICF3	F-3	TP8	J-4		
ICF4	F-4	TP9	J-4		
ICF5	F-5	TP10	J-5		
ICF9	F-10	TP11	K-4		
ICG3	G-2	TP12	K-6		
ICG9	F-10	TP13	E-10		
ICG10	G-10	TP14	F-10		
ICH2	H-2	TP15	G-8		
ICH6A	H-6	TP16	L-10		
ICH6B	H-6	TP17	M-9		
ICH9	H-9	TP18	F-2		
ICH10	H-11	TP19	F-3		
ICJ2	J-2	TP20	B-4		

B-42-2(c)

SP-13 SP-13

SP-13 BOARD (PCM-7050)
(1-637-265-14)
Component Side

Serial No. UC 25011 to 25080

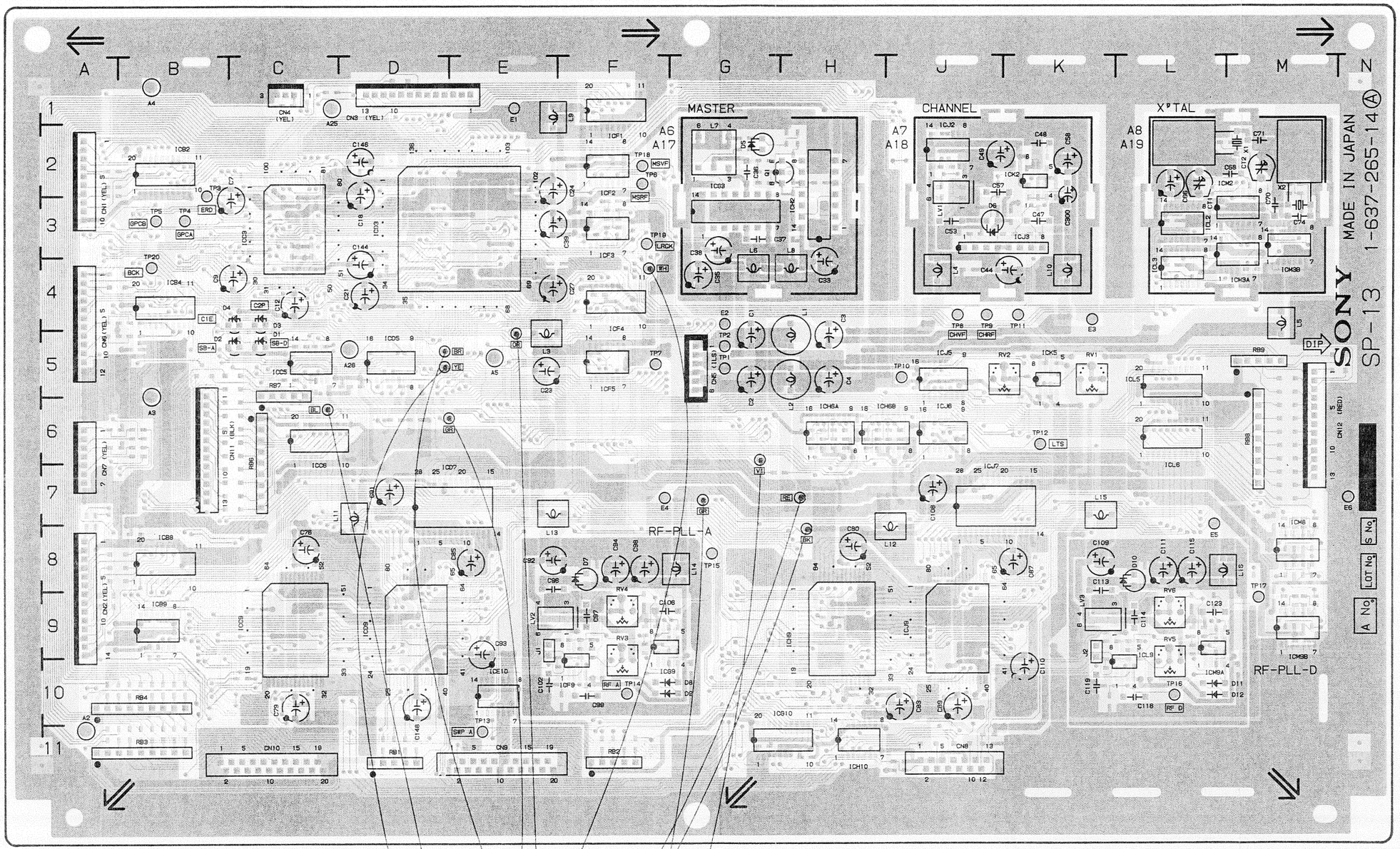

SOLDER SIDE PATTERN 1-637-265-14

COMPONENT SIDE PATTERN 1-637-265-14

Applied Serial No.UC 25011 and higher	
Parts that have been soldered.	ICF6-1 — ICC ICF6-2 — GN ICF6-3 — GN ICF6-6 — ICC ICF6-7 — ICH ICF6-8 — ICJ ICF6-11 — GN ICF6-12 — GN
Parts that have been added.	ICF6 (DUS-447 Bo

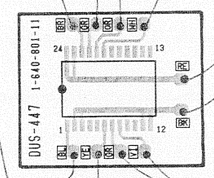

DUS-447 BOARD (PCM-7030)
(1-640-801-11)
Component Side

SOLDER SIDE PATTERN 1-640-801-11

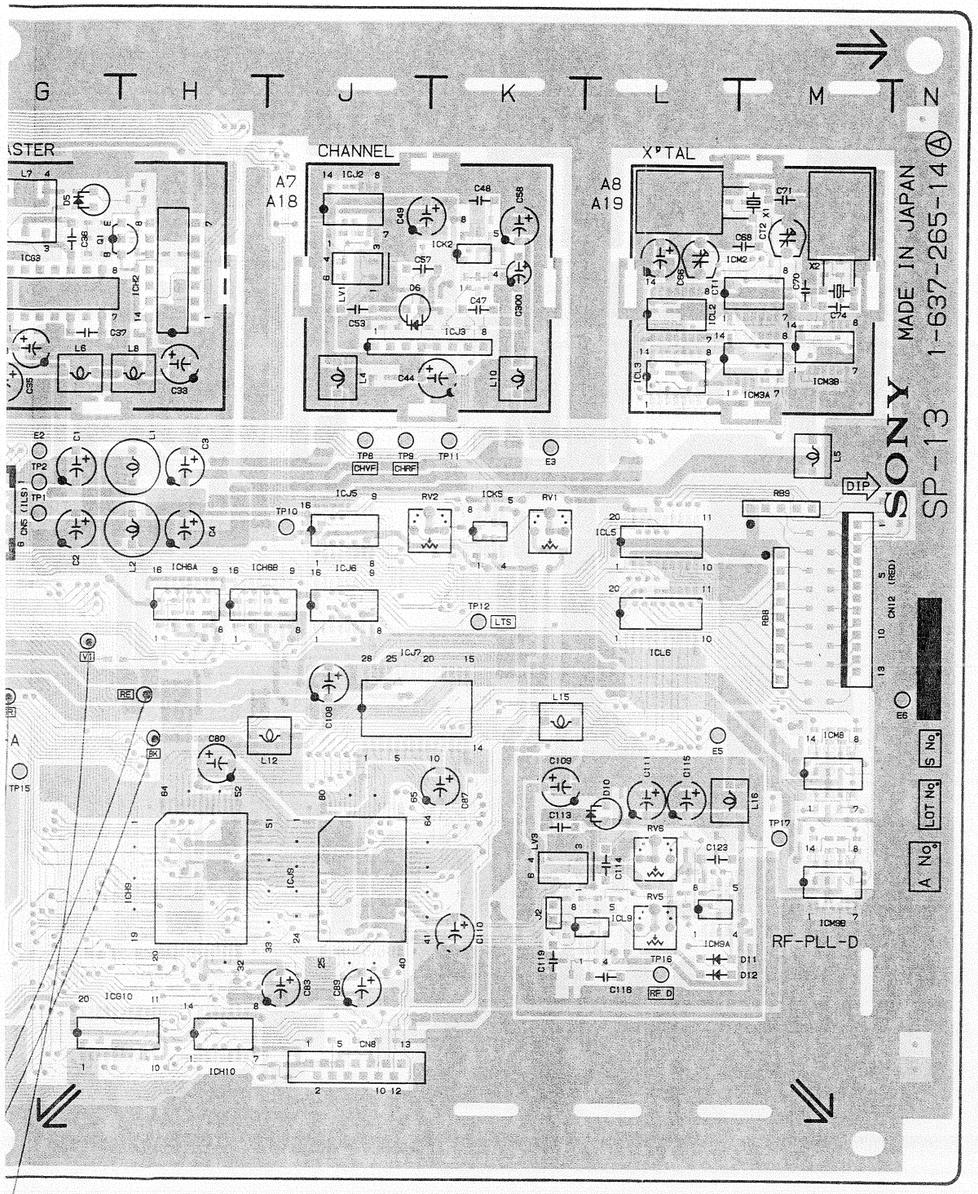

Applied Serial No.UC 25011 and higher	
Parts that have been soldered.	ICF6-1 —— ICC3-43(BLU) ICF6-19 —— ICC9-27(WHT) ICF6-2 —— GND(BLK) ICF6-20 —— ICC3-54(ORG) ICF6-3 —— GND(BLK) ICF6-21 —— ICD3-46(GRY) ICF6-6 —— ICC9-29(YEL) ICF6-22 —— ICD3-47(BRO) ICF6-7 —— ICH9-29(GRY) ICF6-24 —— +5V(RED) ICF6-8 —— ICJ9-32(VIO) ICF6-11 —— GND(BLK) ICF6-12 —— GND(BLK)
Parts that have been added.	ICF6 (DUS-447 Board)

DUS-447 BOARD (PCM-7030)

(1-640-801-11)
Component Side

SOLDER SIDE PATTERN 1-640-801-11

B-41-1(d)

D1	C-5	ICJ3	J-3	X1	M-2
D2	B-5	ICJ5	J-5	X2	M-3
D3	C-4	ICJ6	J-6		
D4	B-4	ICJ7	J-7		
D5	G-2	ICJ9	J-9		
D6	J-3	ICK2	K-2		
D7	F-8	ICK5	K-5		
D8	F-10	ICL2	L-3		
D9	F-10	ICL3	L-4		
D10	L-8	ICL5	L-5		
D11	L-10	ICL6	L-6		
D12	L-10	ICL9	L-9		
		ICM2	M-2		
E1	E-1	ICM3A	M-4		
E2	G-4	ICM3B	M-4		
E3	K-4	ICM8	M-8		
E4	F-7	ICM9A	L-9		
E5	L-7	ICM9B	M-9		
E6	N-7				
		Q1	G-2		
ICB2	B-2				
ICB4	B-4	RV1	K-5		
ICB8	B-8	RV2	J-5		
ICB9	B-9	RV3	F-9		
ICC3	C-3	RV4	F-9		
ICC5	C-5	RV5	L-9		
ICC6	C-6	RV6	L-9		
ICC9	C-9				
ICD3	D-3	TP1	G-5		
ICD5	D-5	TP2	G-5		
ICD7	D-7	TP3	B-2		
ICD9	D-9	TP4	B-3		
ICE10	E-10	TP5	B-3		
ICF1	F-1	TP6	F-2		
ICF2	F-2	TP7	F-5		
ICF3	F-3	TP8	J-4		
ICF4	F-4	TP9	J-4		
ICF5	F-5	TP10	J-5		
ICF9	F-10	TP11	K-4		
ICG3	G-2	TP12	K-6		
ICG9	F-10	TP13	E-11		
ICG10	G-10	TP14	F-10		
ICH2	H-2	TP15	G-8		
ICH6A	H-6	TP16	L-10		
ICH6B	H-6	TP17	M-9		
ICH9	H-9	TP18	F-2		
ICH10	H-11	TP19	F-3		
ICJ2	J-2	TP20	B-4		

B-42-1(d)

SP-13 SP-13

SP-13 BOARD (PCM-7050)
(1-637-265-14)
Solder Side

Serial No. UC 25011 to 25080

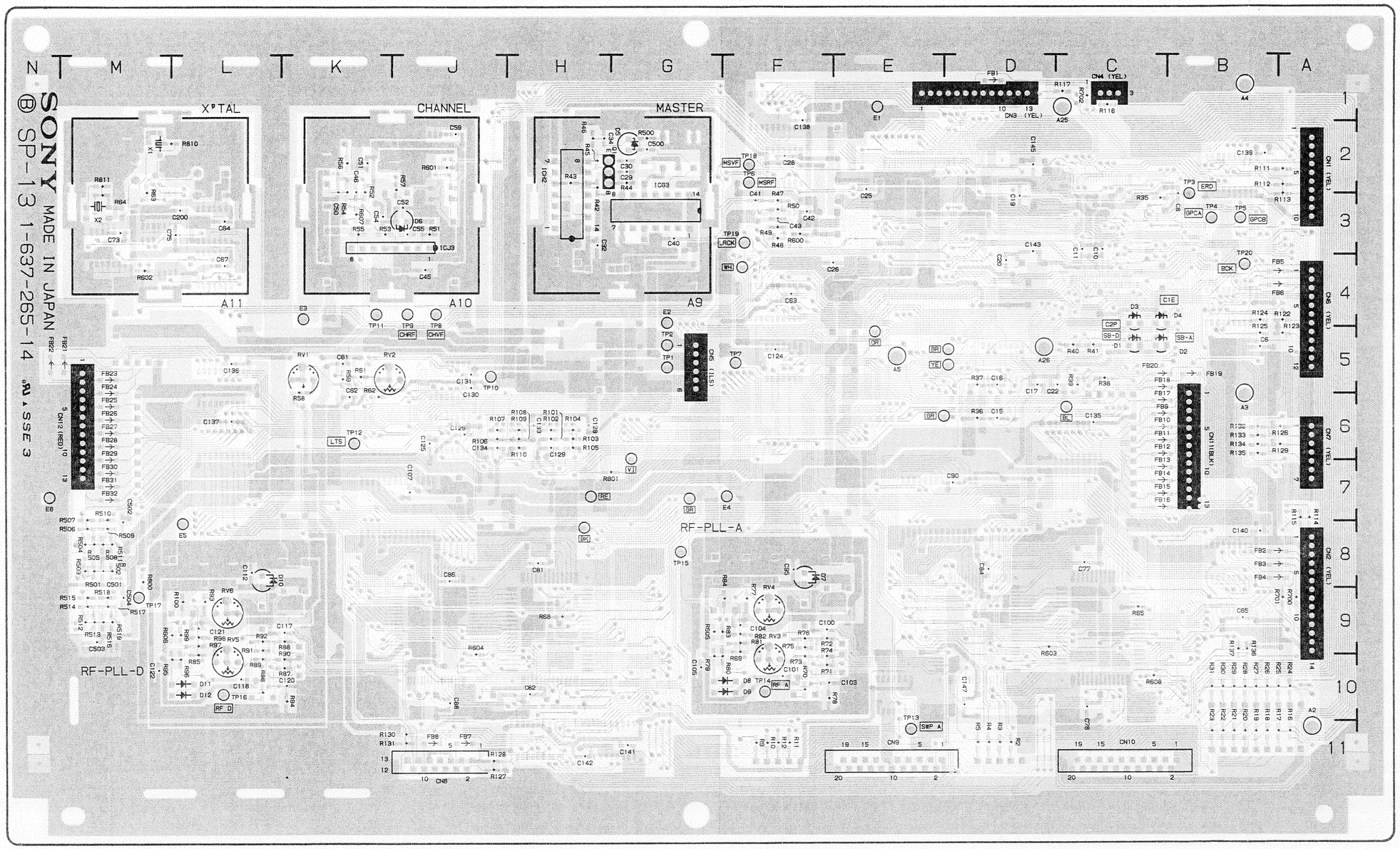

SOLDER SIDE PATTERN 1-637-265-14
COMPONENT SIDE PATTERN 1-637-265-14

B-40-2(d)

B-41-2(d)

D1
D2
D3
D4
D5
D6
D7
D8
D9
D10
D11
D12

E1
E2
E3
E4
E5
E6

ICB2
ICB4
ICB8
ICB9
ICC3
ICC5
ICC6
ICC9
ICD3
ICD5
ICD7
ICD9
ICE1
ICF1
ICF2
ICF3
ICF4
ICF5
ICF9
ICG3
ICG9
ICG1
ICH2
ICH6
ICH9
ICH1
ICJ2

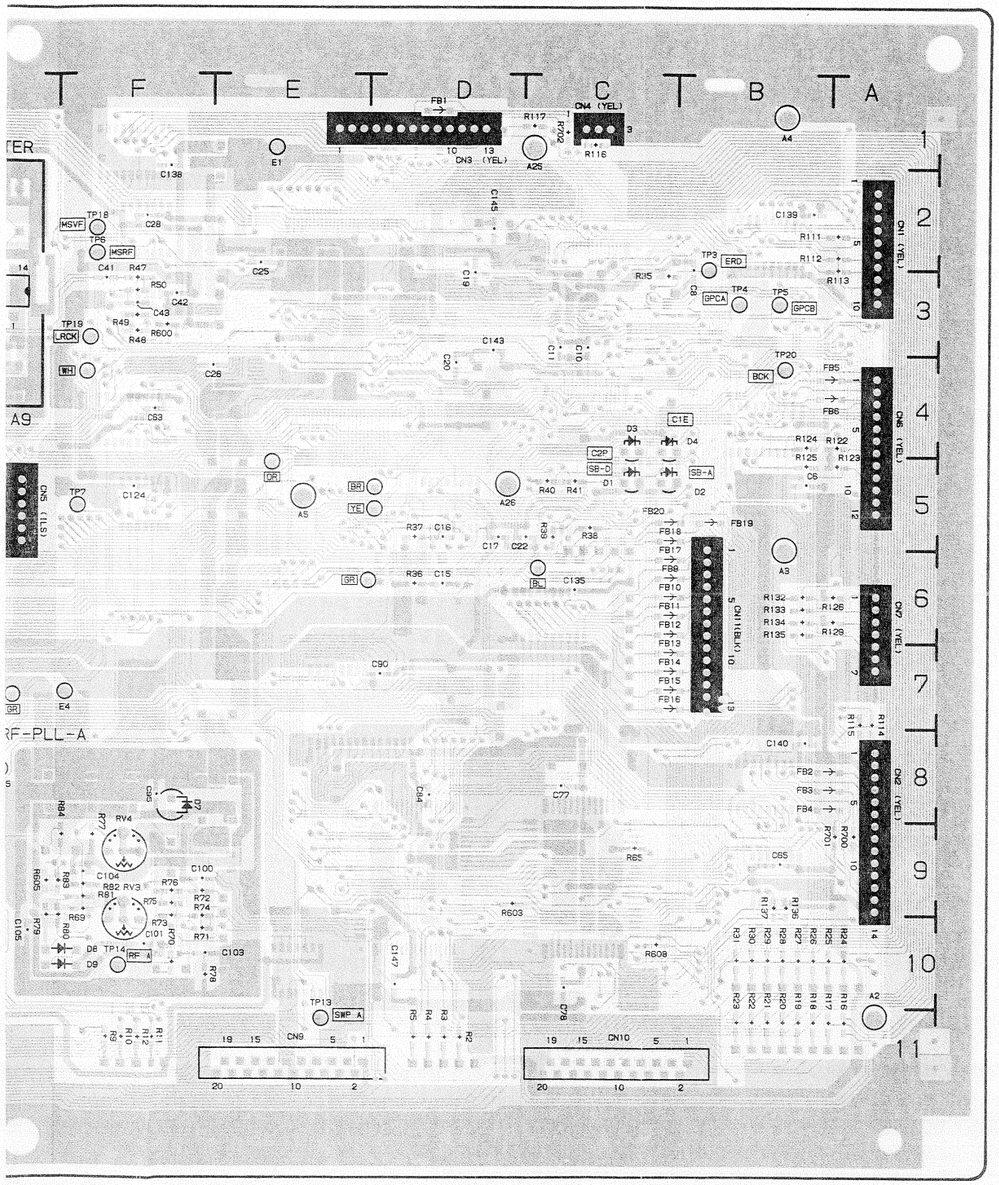

B-41-2(d)

D1	C-5	ICJ3	J-3	X1	M-2
D2	B-5	ICJ5	J-5	X2	M-3
D3	C-4	ICJ6	J-6		
D4	B-4	ICJ7	J-7		
D5	G-2	ICJ9	J-9		
D6	J-3	ICK2	K-2		
D7	F-8	ICK5	K-5		
D8	F-10	ICL2	L-3		
D9	F-10	ICL3	L-4		
D10	L-8	ICL5	L-5		
D11	L-10	ICL6	L-6		
D12	L-10	ICL9	L-9		
		ICM2	M-2		
E1	E-1	ICM3A	M-4		
E2	G-4	ICM3B	M-4		
E3	K-4	ICM8	M-8		
E4	F-7	ICM9A	L-9		
E5	L-7	ICM9B	M-9		
E6	N-7				
		Q1	G-2		
ICB2	B-2				
ICB4	B-4	RV1	K-5		
ICB8	B-8	RV2	J-5		
ICB9	B-9	RV3	F-9		
ICC3	C-3	RV4	F-9		
ICC5	C-5	RV5	L-9		
ICC6	C-6	RV6	L-9		
ICC9	C-9				
ICD3	D-3	TP1	G-5		
ICD5	D-5	TP2	G-5		
ICD7	D-7	TP3	B-2		
ICD9	D-9	TP4	B-3		
ICE10	E-10	TP5	B-3		
ICF1	F-1	TP6	F-2		
ICF2	F-2	TP7	F-5		
ICF3	F-3	TP8	J-4		
ICF4	F-4	TP9	J-4		
ICF5	F-5	TP10	J-5		
ICF9	F-10	TP11	K-4		
ICG3	G-2	TP12	K-6		
ICG9	F-10	TP13	E-11		
ICG10	G-10	TP14	F-10		
ICH2	H-2	TP15	G-8		
ICH6A	H-6	TP16	L-10		
ICH6B	H-6	TP17	M-9		
ICH9	H-9	TP18	F-2		
ICH10	H-11	TP19	F-3		
ICJ2	J-2	TP20	B-4		

B-42-2(d)

SP-13 SP-13

SP-13 BOARD (PCM-7050)
(1-637-265-15)
Component Side

Serial No. UC 25081 and higher
EK 55111 and higher

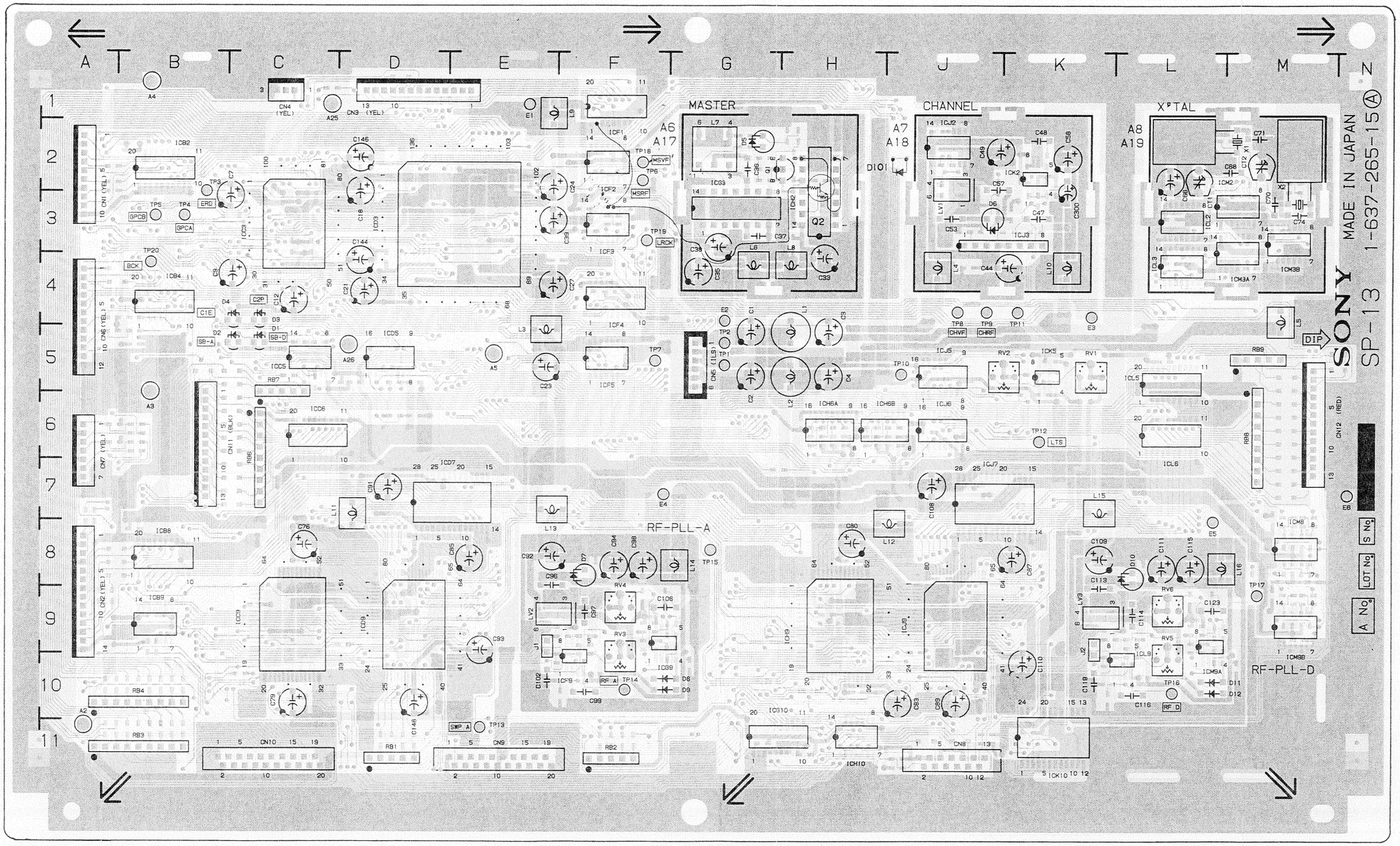

SOLDER SIDE PATTERN 1-637-265-15
COMPONENT SIDE PATTERN 1-637-265-15

D1	C-5	ICJ5	J-5
D2	B-5	ICJ6	J-6
D3	C-4	ICJ7	J-7
D4	B-4	ICJ9	J-9
D5	G-2	ICK2	K-2
D6	J-3	ICK5	K-3
D7	F-8	ICK10	K-10
D8	F-10	ICL2	L-3
D9	F-10	ICL3	L-4
D10	L-8	ICL5	L-5
D11	L-10	ICL6	L-6
D12	L-10	ICL9	L-9
		ICM2	M-2
E1	E-1	ICM3A	M-4
E2	G-4	ICM3B	M-4
E3	K-4	ICM8	M-8
E4	F-7	ICM9A	L-9
E5	L-7	ICM9B	M-9
E6	N-7		
		Q1	G-2
ICB2	B-2	Q2	H-2
ICB4	B-4		
ICB8	B-8	RV1	K-5
ICB9	B-9	RV2	J-5
ICC3	C-3	RV3	F-9
ICC5	C-5	RV4	F-9
ICC6	C-6	RV5	L-9
ICC9	C-9	RV6	L-9
ICD3	D-3		
ICD5	D-5	TP1	G-5
ICD7	D-7	TP2	G-5
ICD9	D-9	TP3	B-2
ICF1	F-1	TP4	B-3
ICF2	F-2	TP5	B-3
ICF3	F-3	TP6	F-2
ICF4	F-4	TP7	F-5
ICF5	F-5	TP8	J-4
ICF9	F-10	TP9	J-4
ICG3	G-2	TP10	J-5
ICG9	F-10	TP11	K-4
ICG10	G-10	TP12	K-6
ICH2	H-2	TP13	E-11
ICH6A	H-6	TP14	F-10
ICH6B	H-6	TP15	G-8
ICH9	H-9	TP16	L-10
ICH10	H-11	TP17	M-9
ICJ2	J-2	TP18	F-2
ICJ3	J-3	TP19	F-3

Applied Serial No. UC 25471 and higher EK 55501 and higher	
Parts that have been soldered.	ICF1-2 —— ICF3-11 ICF3-10 —— Q2(Base)
Parts that have been added.	Q2

Applied Serial No. UC;30021 and higher EK;55121 and higher	
Parts that have been added	D101

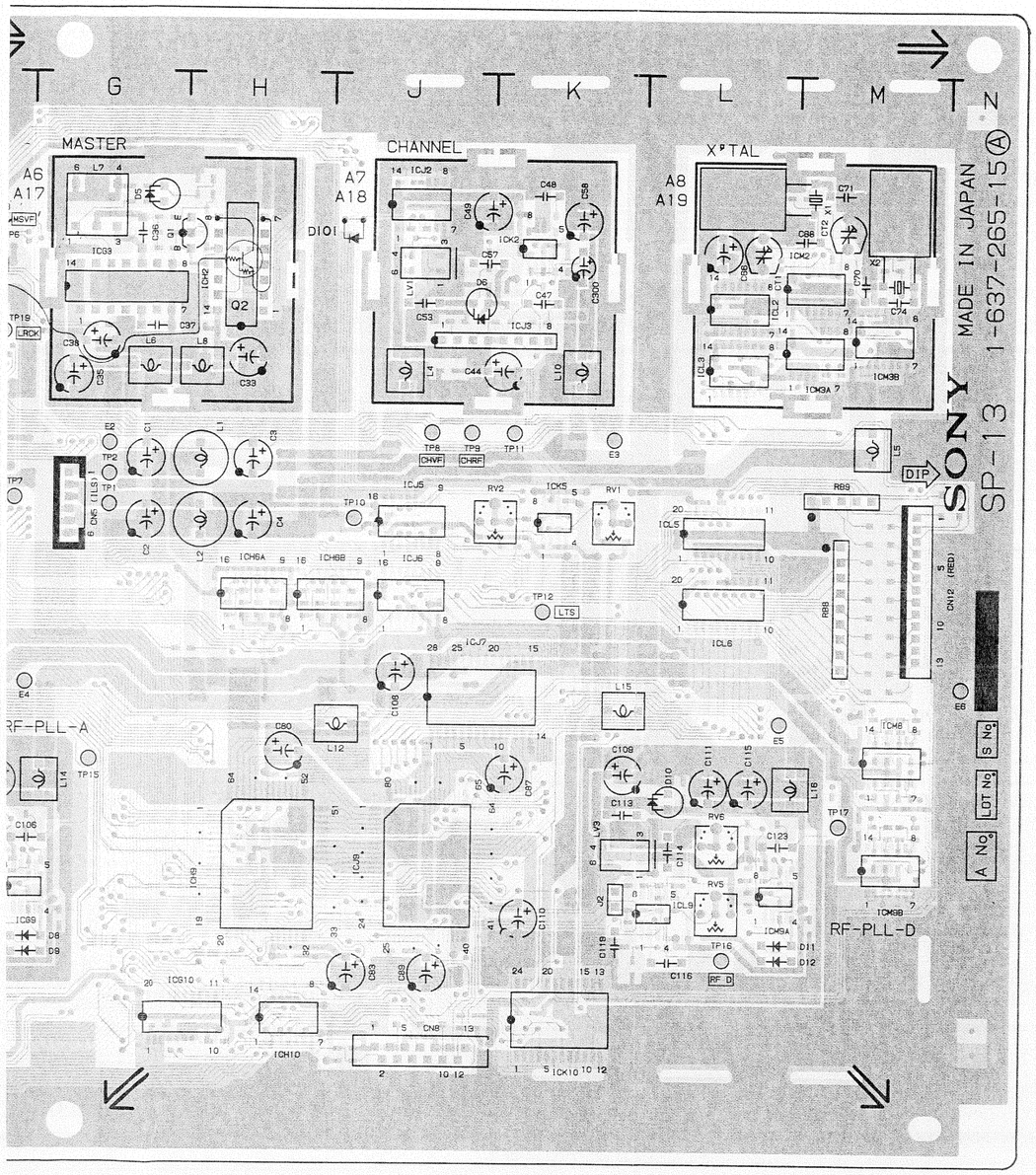

D1	C-5	ICJ5	J-5	TP20	B-4
D2	B-5	ICJ6	J-6		
D3	C-4	ICJ7	J-7	X1	M-2
D4	B-4	ICJ9	J-9	X2	M-3
D5	G-2	ICK2	K-2		
D6	J-3	ICK5	K-5		
D7	F-8	ICK10	K-10		
D8	F-10	ICL2	L-3		
D9	F-10	ICL3	L-4		
D10	L-8	ICL5	L-5		
D11	L-10	ICL6	L-6		
D12	L-10	ICL9	L-9		
		ICM2	M-2		
E1	E-1	ICM3A	M-4		
E2	G-4	ICM3B	M-4		
E3	K-4	ICM8	M-8		
E4	F-7	ICM9A	L-9		
E5	L-7	ICM9B	M-9		
E6	N-7				
		Q1	G-2		
ICB2	B-2	Q2	H-2		
ICB4	B-4				
ICB8	B-8	RV1	K-5		
ICB9	B-9	RV2	J-5		
ICC3	C-3	RV3	F-9		
ICC5	C-5	RV4	F-9		
ICC6	C-6	RV5	L-9		
ICC9	C-9	RV6	L-9		
ICD3	D-3				
ICD5	D-5	TP1	G-5		
ICD7	D-7	TP2	G-5		
ICD9	D-9	TP3	B-2		
ICF1	F-1	TP4	B-3		
ICF2	F-2	TP5	B-3		
ICF3	F-3	TP6	F-2		
ICF4	F-4	TP7	F-5		
ICF5	F-5	TP8	J-4		
ICF9	F-10	TP9	J-4		
ICG3	G-2	TP10	J-5		
ICG9	F-10	TP11	K-4		
ICG10	G-10	TP12	K-6		
ICH2	H-2	TP13	E-11		
ICH6A	H-6	TP14	F-10		
ICH6B	H-6	TP15	G-8		
ICH9	H-9	TP16	L-10		
ICH10	H-11	TP17	M-9		
ICJ2	J-2	TP18	F-2		
ICJ3	J-3	TP19	F-3		

Applied Serial No.	UC 25471 and higher EK 55501 and higher
Parts that have been soldered.	ICF1-2 —— ICF3-11 ICF3-10 —— Q2(Base)
Parts that have been added.	Q2

Applied Serial No.	UC;30021 and higher EK;55121 and higher
Parts that have been added	D101

SP-13 SP-13

SP-13 BOARD (PCM-7050)
(1-637-265-15)
Solder Side

Serial No. UC 25081 and higher
EK 55111 and higher

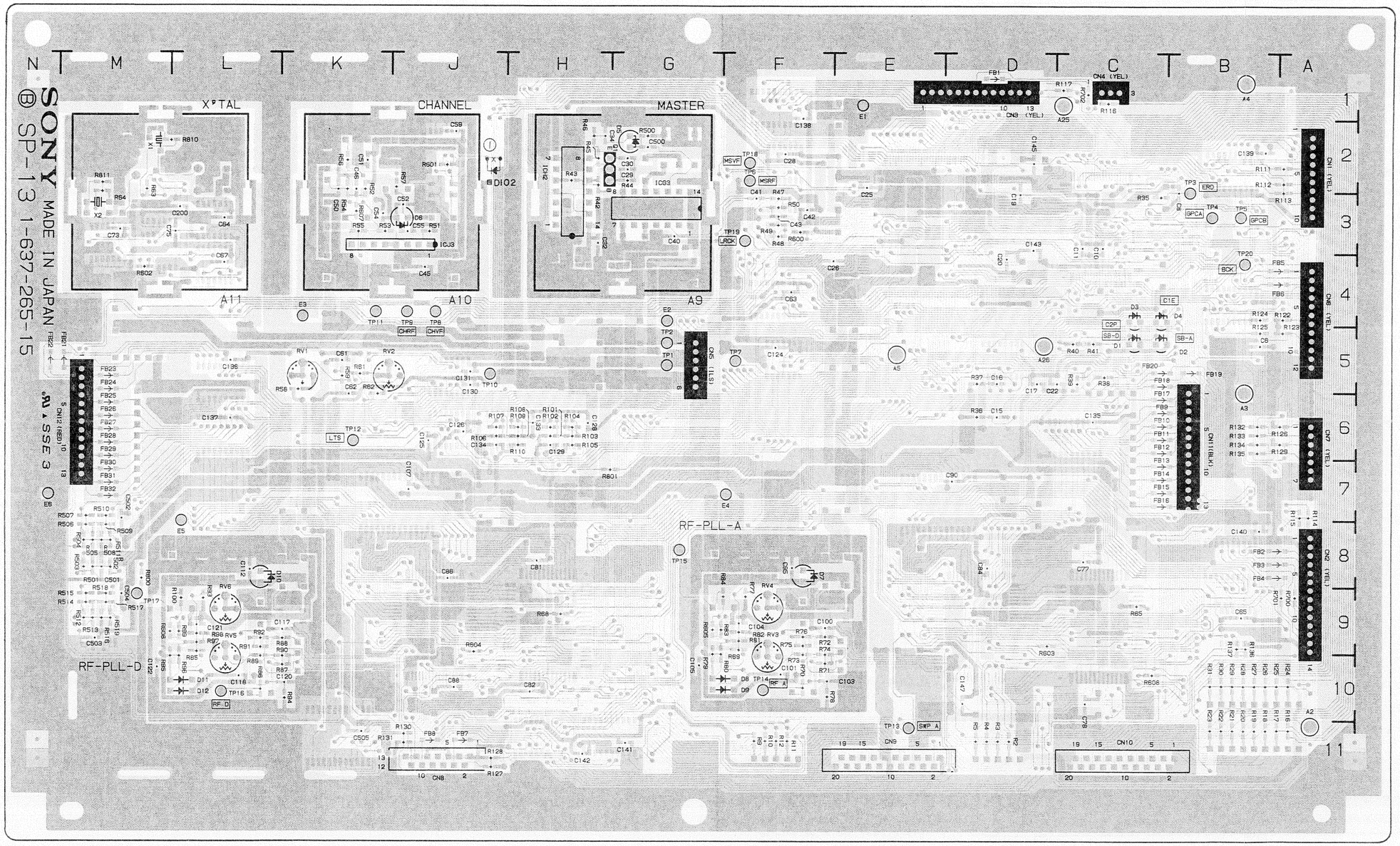

SOLDER SIDE PATTERN 1-637-265-15
COMPONENT SIDE PATTERN 1-637-265-15

D1	C-5	ICJ5	J-5
D2	B-5	ICJ6	J-6
D3	C-4	ICJ7	J-7
D4	B-4	ICJ9	J-9
D5	G-2	ICK2	K-2
D6	J-3	ICK5	K-5
D7	F-8	ICK10	K-10
D8	F-10	ICL2	L-3
D9	F-10	ICL3	L-4
D10	L-8	ICL5	L-5
D11	L-10	ICL6	L-6
D12	L-10	ICL9	L-9
		ICM2	M-2
E1	E-1	ICM3A	M-4
E2	G-4	ICM3B	M-4
E3	K-4	ICM8	M-8
E4	F-7	ICM9A	L-9
E5	L-8	ICM9B	M-9
E6	N-7		
		Q1	G-2
ICB2	B-2		
ICB4	B-4	RV1	K-5
ICB8	B-8	RV2	J-5
ICB9	B-9	RV3	F-9
ICC3	C-3	RV4	F-9
ICC5	C-5	RV5	L-9
ICC6	C-6	RV6	L-9
ICC9	C-9		
ICD3	D-3	TP1	G-5
ICD5	D-5	TP2	G-5
ICD7	D-7	TP3	B-2
ICD9	D-9	TP4	B-3
ICF1	F-1	TP5	B-3
ICF2	F-2	TP6	F-2
ICF3	F-3	TP7	F-5
ICF4	F-4	TP8	J-4
ICF5	F-5	TP9	J-4
ICF9	F-10	TP10	J-5
ICG3	G-2	TP11	K-4
ICG9	F-10	TP12	K-6
ICG10	G-10	TP13	E-11
ICH2	H-2	TP14	F-10
ICH6A	H-6	TP15	G-8
ICH6B	H-6	TP16	L-10
ICH9	H-9	TP17	M-9
ICH10	H-11	TP18	F-2
ICJ2	J-2	TP19	F-3
ICJ3	J-3	TP20	B-4

Applied Serial No.	UC;30021 and higher EK;50121 and higher
Jumpers that have been cut.	① (See the b
Parts marked with ∎ that have been installed on the solder side.	∎ D102

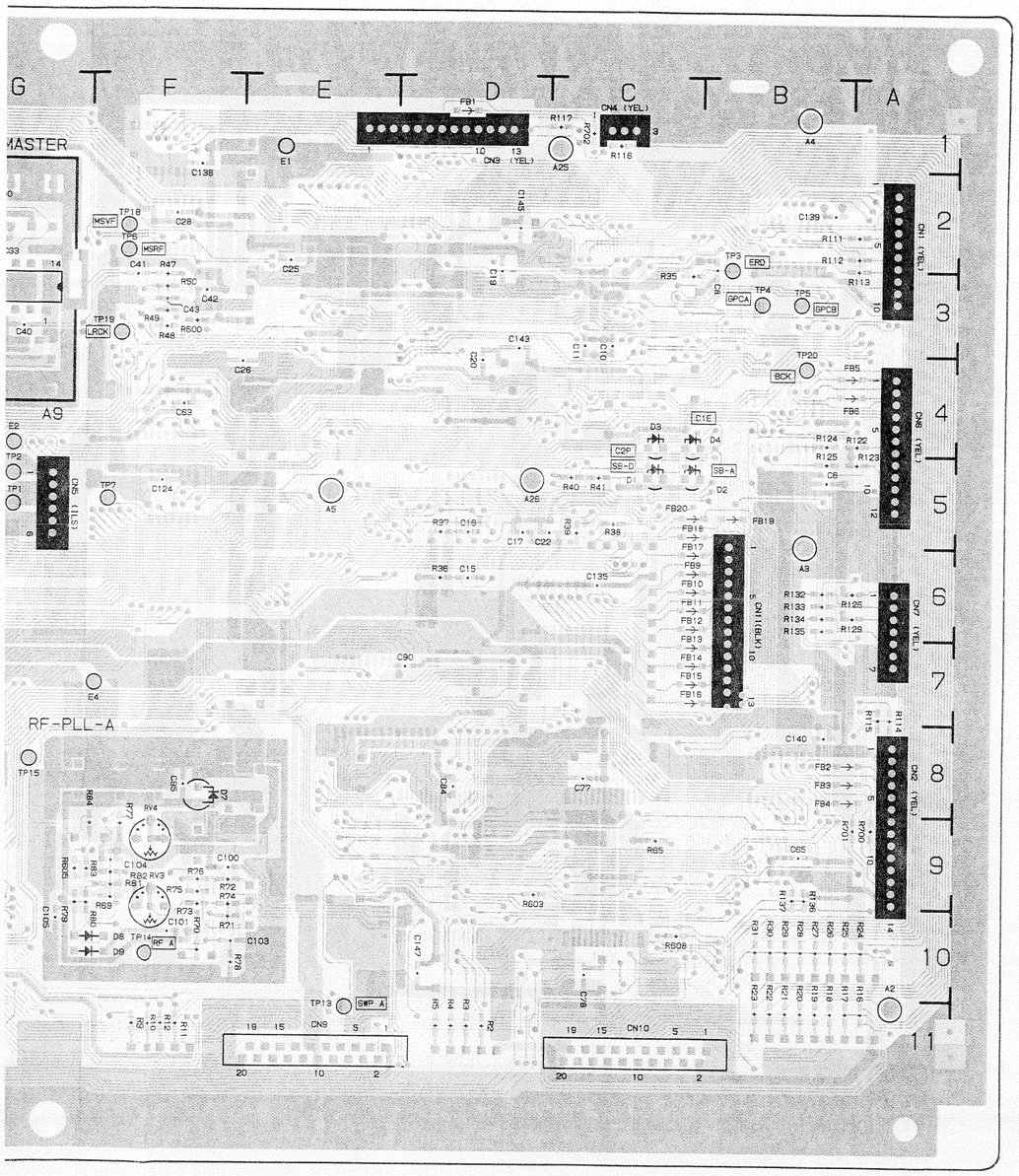

D1	C-5	ICJ5	J-5	X1	M-2
D2	B-5	ICJ6	J-6	X2	M-3
D3	C-4	ICJ7	J-7		
D4	B-4	ICJ9	J-9		
D5	G-2	ICK2	K-2		
D6	J-3	ICK5	K-5		
D7	F-8	ICK10	K-10		
D8	F-10	ICL2	L-3		
D9	F-10	ICL3	L-4		
D10	L-8	ICL5	L-5		
D11	L-10	ICL6	L-6		
D12	L-10	ICL9	L-9		
		ICM2	M-2		
E1	E-1	ICM3A	M-4		
E2	G-4	ICM3B	M-4		
E3	K-4	ICM8	M-8		
E4	F-7	ICM9A	L-9		
E5	L-8	ICM9B	M-9		
E6	N-7				
		Q1	G-2		
ICB2	B-2				
ICB4	B-4	RV1	K-5		
ICB8	B-8	RV2	J-5		
ICB9	B-9	RV3	F-9		
ICC3	C-3	RV4	F-9		
ICC5	C-5	RV5	L-9		
ICC6	C-6	RV6	L-9		
ICC9	C-9				
ICD3	D-3	TP1	G-5		
ICD5	D-5	TP2	G-5		
ICD7	D-7	TP3	B-2		
ICD9	D-9	TP4	B-3		
ICF1	F-1	TP5	B-3		
ICF2	F-2	TP6	F-2		
ICF3	F-3	TP7	F-5		
ICF4	F-4	TP8	J-4		
ICF5	F-5	TP9	J-4		
ICF9	F-10	TP10	J-5		
ICG3	G-2	TP11	K-4		
ICG9	F-10	TP12	K-6		
ICG10	G-10	TP13	E-11		
ICH2	H-2	TP14	F-10		
ICH6A	H-6	TP15	G-8		
ICH6B	H-6	TP16	L-10		
ICH9	H-9	TP17	M-9		
ICH10	H-11	TP18	F-2		
ICJ2	J-2	TP19	F-3		
ICJ3	J-3	TP20	B-4		

Applied Serial No.	UC;30021 and higher EK;50121 and higher
Jumpers that have been cut.	① (See the board.)
Parts marked with ∎ that have been installed on the solder side.	∎ D102

SP-17C BOARD (PCM-7050)
(1-640-802-11)

Component Side

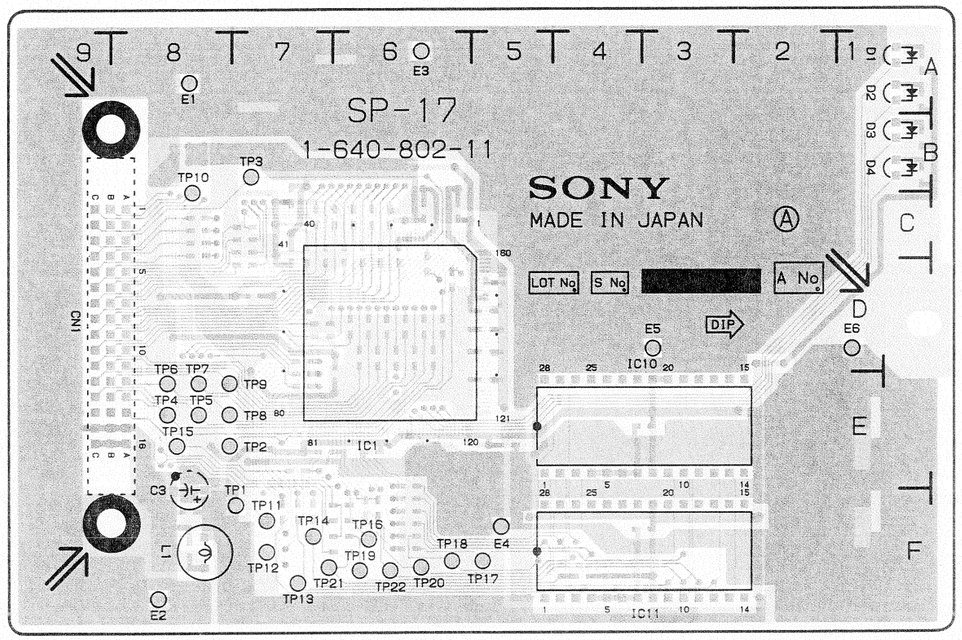

Solder Side

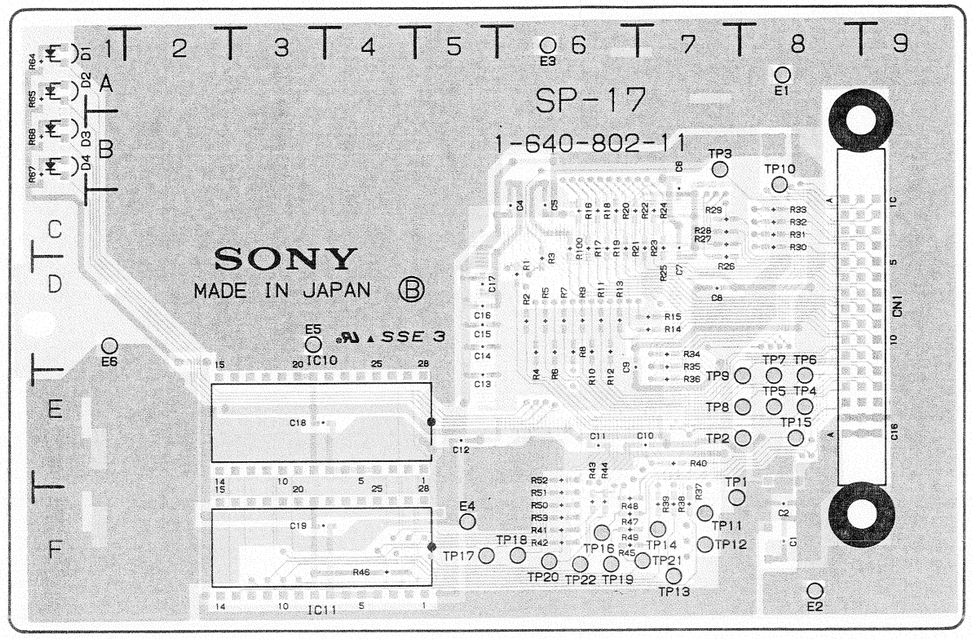

SOLDER SIDE PATTERN 1-640-802-11
COMPONENT SIDE PATTERN 1-640-802-11

D1	A-1	TP8	E-7
D2	A-1	TP9	E-7
D3	B-1	TP10	B-8
D4	B-1	TP11	E-7
		TP12	F-7
E1	A-8	TP13	F-7
E2	F-8	TP14	F-7
E3	A-6	TP15	E-8
E4	F-5	TP16	F-6
E5	D-1	TP17	F-5
		TP18	F-6
IC1	E-6	TP19	F-6
IC10	E-3	TP20	F-6
IC11	F-3	TP21	F-6
TP1	E-7		
TP2	E-7		
TP3	B-7		
TP4	D-8		
TP5	D-8		
TP6	D-8		
TP7	D-8		

SV-123 BOARD (PCM-7050)
(1-637-263-11)
Component Side

Serial No. UC 20001 to 20015
EK 50001 to 50035

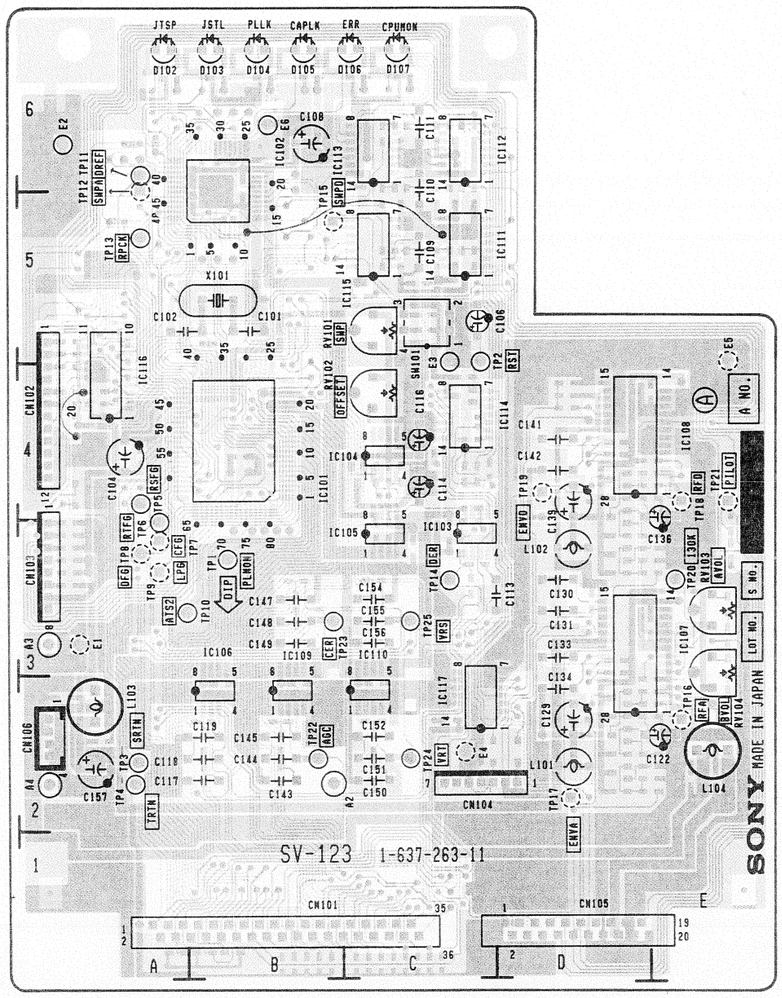

SOLDER SIDE PATTERN 1-637-263-11
COMPONENT SIDE PATTERN 1-637-263-11

D102	A-6	TP22	B-2
D103	B-6	TP23	B-3
D104	B-6	TP24	C-2
D105	B-6	TP25	C-3
D106	C-6		
D107	C-6	X101	B-5
E2	A-6		
E3	C-4		
E6	B-6		
IC101	B-4		
IC102	B-6		
IC103	C-3		
IC104	B-4		
IC105	B-3		
IC106	B-3		
IC107	E-3		
IC108	E-4		
IC109	B-3		
IC110	C-3		
IC111	D-5		
IC112	D-6		
IC113	C-6		
IC114	D-4		
IC115	C-5		
IC116	A-4		
IC117	C-2		
RV101	B-5		
RV102	B-4		
RV103	E-3		
RV104	E-2		
SW101	C-4		
TP1	B-3		
TP2	D-4		
TP3	A-2		
TP4	A-2		
TP5	A-4		
TP6	A-3		
TP10	B-3		
TP11	A-6		
TP13	A-5		
TP14	C-3		
TP20	E-3		

Applied Serial No. UC 20001 to 20015 EK 50001 to 50035	
Jumpers that have been soldered.	IC111-10 —— IC102-12 IC116-18 —— CN102-7

SV-123 BOARD (PCM-7050)
(1-637-263-11)
Solder Side

Serial No. UC 20001 to 20015
EK 50001 to 50035

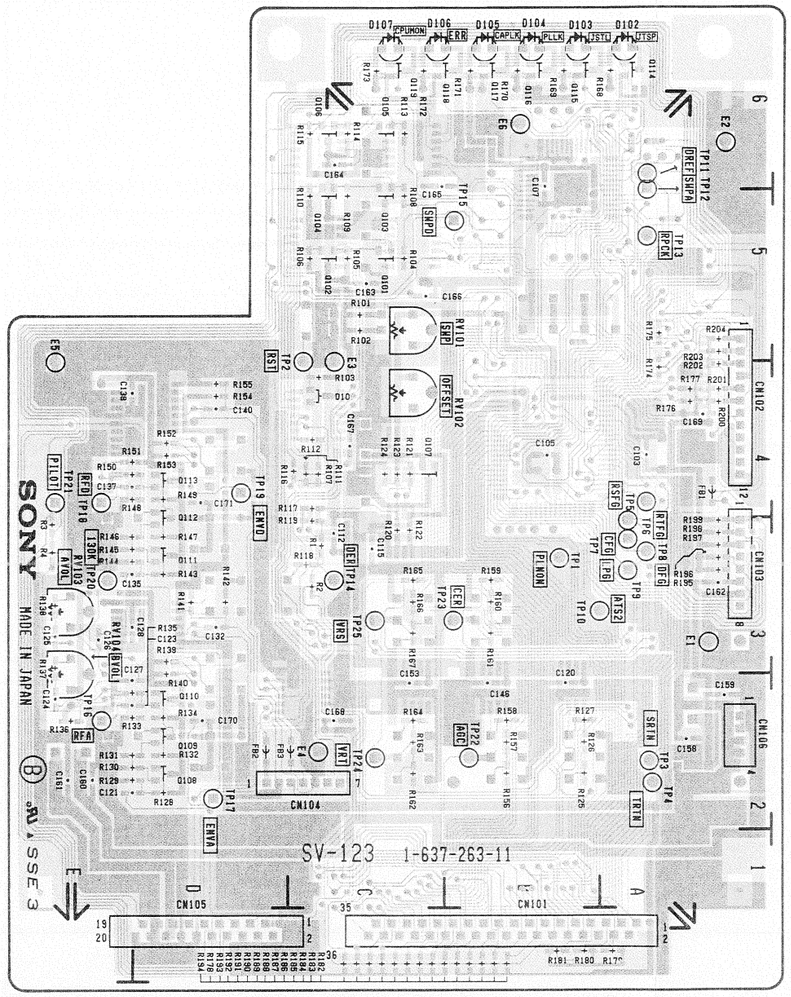

SOLDER SIDE PATTERN 1-637-263-11
COMPONENT SIDE PATTERN 1-637-263-11

D101	C-4		
E1	A-3		
E4	C-2		
E5	E-5		
Q101	C-5		
Q102	C-5		
Q103	C-5		
Q104	C-5		
Q105	C-6		
Q106	C-6		
Q107	C-4		
Q108	D-2		
Q109	D-2		
Q110	D-2		
Q111	D-3		
Q112	D-4		
Q113	D-4		
Q114	A-6		
Q115	B-6		
Q116	B-6		
Q117	B-6		
Q118	B-6		
Q119	C-6		
TP7	B-3		
TP8	A-3		
TP9	A-3		
TP12	A-5		
TP15	B-5		
TP16	E-2		
TP17	D-2		
TP18	E-4		
TP19	D-4		
TP21	E-4		

SV-123 BOARD (PCM-7050)
(1-637-263-12)

Serial No. UC 20016 and higher
EK 50036 and higher

Component Side

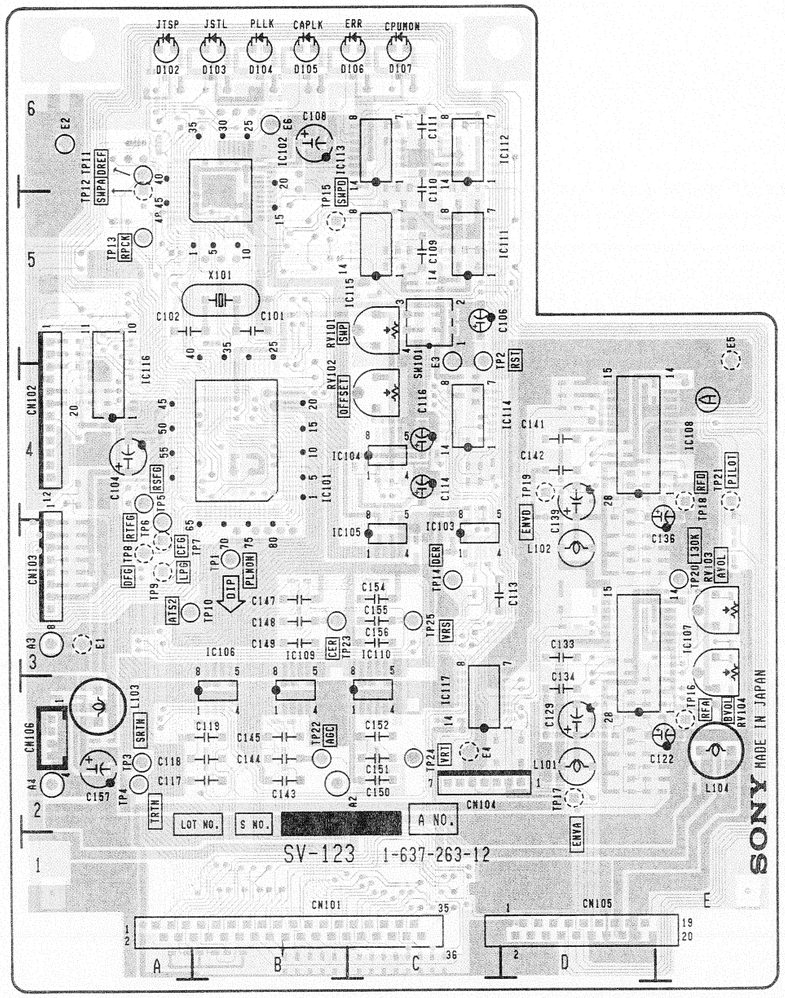

D102	A-6	TP22	B-2
D103	B-6	TP23	B-3
D104	B-6	TP24	C-2
D105	B-6	TP25	C-3
D106	C-6		
D107	C-6	X101	B-5
E2	A-6		
E3	C-4		
E6	B-6		
IC101	B-4		
IC102	B-6		
IC103	C-3		
IC104	B-4		
IC105	B-3		
IC106	B-3		
IC107	E-3		
IC108	E-4		
IC109	B-3		
IC110	C-3		
IC111	D-5		
IC112	D-6		
IC113	C-6		
IC114	D-4		
IC115	C-5		
IC116	A-4		
IC117	C-2		
RV101	B-5		
RV102	B-4		
RV103	E-3		
RV104	E-2		
SW101	C-4		
TP1	B-3		
TP2	D-4		
TP3	A-2		
TP4	A-2		
TP5	A-4		
TP6	A-3		
TP10	B-3		
TP11	A-6		
TP13	A-5		
TP14	C-3		
TP20	E-3		

SOLDER SIDE PATTERN 1-637-263-12
COMPONENT SIDE PATTERN 1-637-263-12

Solder Side

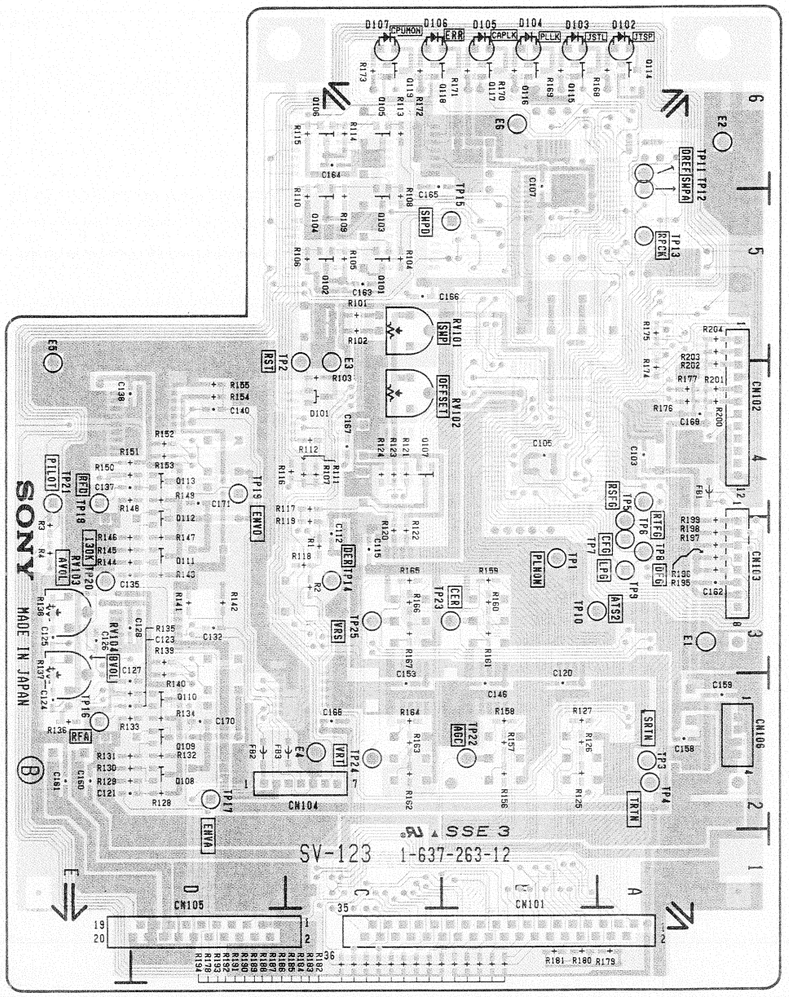

D101	C-4
E1	A-3
E4	C-2
E5	E-5
Q101	C-5
Q102	C-5
Q103	C-5
Q104	C-5
Q105	C-6
Q106	C-6
Q107	C-4
Q108	D-2
Q109	D-2
Q110	D-2
Q111	D-3
Q112	D-4
Q113	D-4
Q114	A-6
Q115	B-6
Q116	B-6
Q117	B-6
Q118	B-6
Q119	C-6
TP7	B-3
TP8	A-3
TP9	A-3
TP12	A-5
TP15	B-5
TP16	E-2
TP17	D-2
TP18	E-4
TP19	D-4
TP21	E-4

SOLDER SIDE PATTERN 1-637-263-12
COMPONENT SIDE PATTERN 1-637-263-12

SW-420 BOARD (PCM-7050)
(1-637-270-11)
Component Side

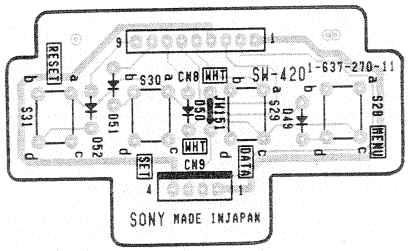

SOLDER SIDE PATTERN 1-637-270-11

SW-426 BOARD (PCM-7050)
(1-637-279-11)
Component Side

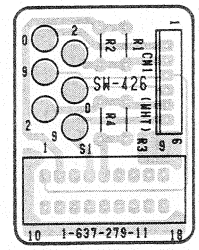

SOLDER SIDE PATTERN 1-637-279-11

SW-452 BOARD (PCM-7050)
(1-637-287-11)
Component Side

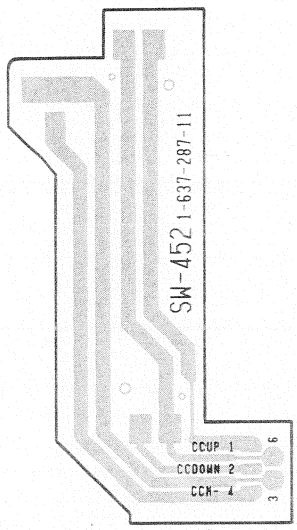

SOLDER SIDE PATTERN 1-637-287-11

SW-453 BOARD (PCM-7050)
(1-637-293-11)
Component Side

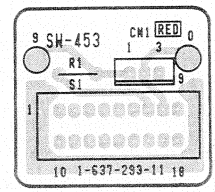

SOLDER SIDE PATTERN 1-637-293-11

SW-454 BOARD (PCM-7050)
(1-637-294-11)
Component Side

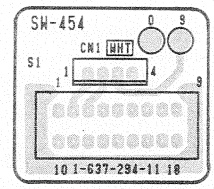

SOLDER SIDE PATTERN 1-637-294-11

SY-155A,VR-109 SY-15

VR-109 BOARD (PCM-7050)
(1-637-284-12)
Component Side

Serial No. UC 20001 to 20015
EK 50001 to 50035

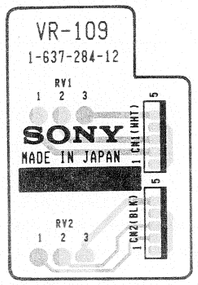

SOLDER SIDE PATTERN 1-637-284-12

SY-155A BOARD (PCM-7050)
(1-637-266-11)
Component Side

Serial No. UC 20001 to 20015
EK 50001 to 50035

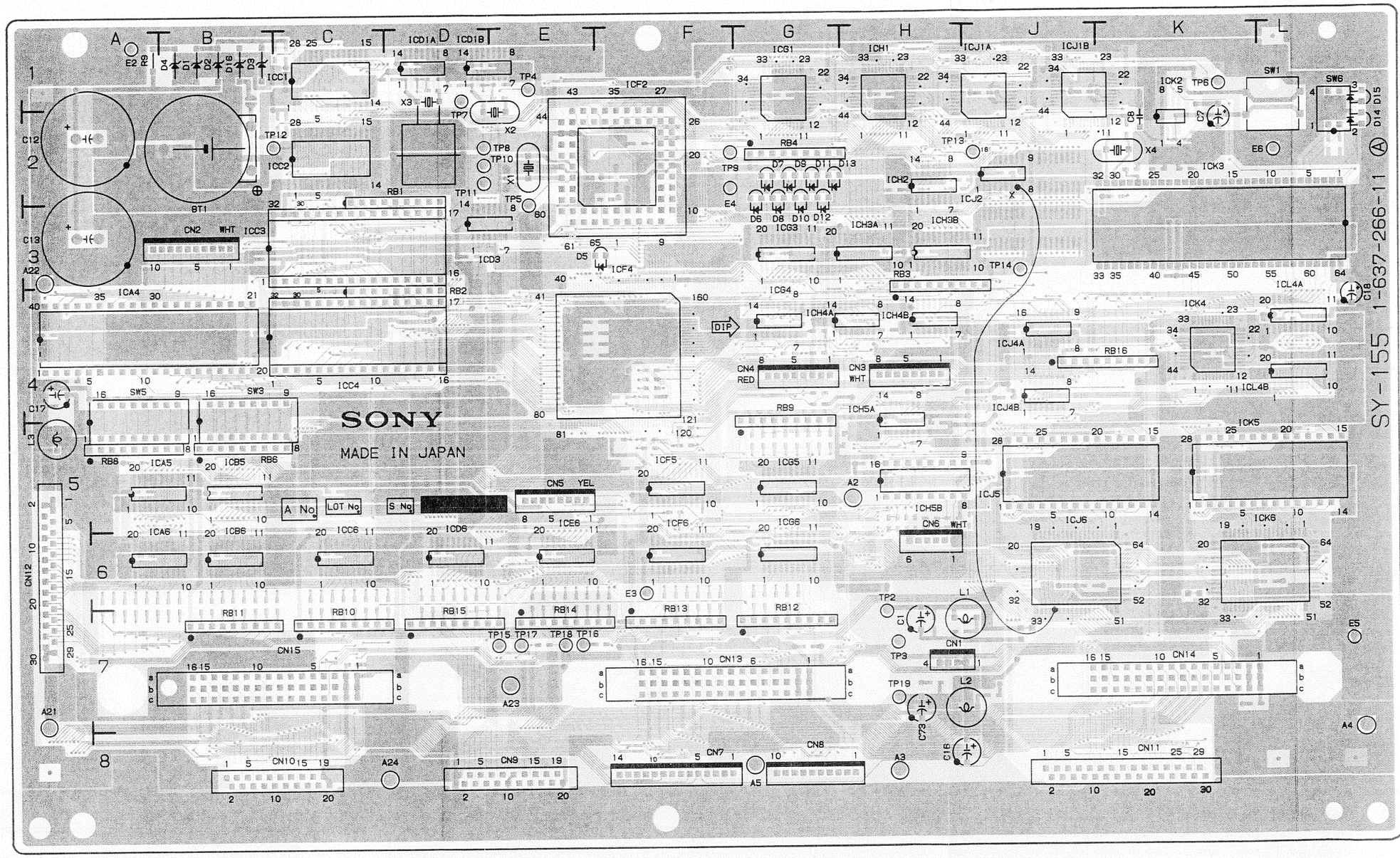

SOLDER SIDE PATTERN 1-637-266-11
COMPONENT SIDE PATTERN 1-637-266-11

C 20001 to 20015
K 50001 to 50035

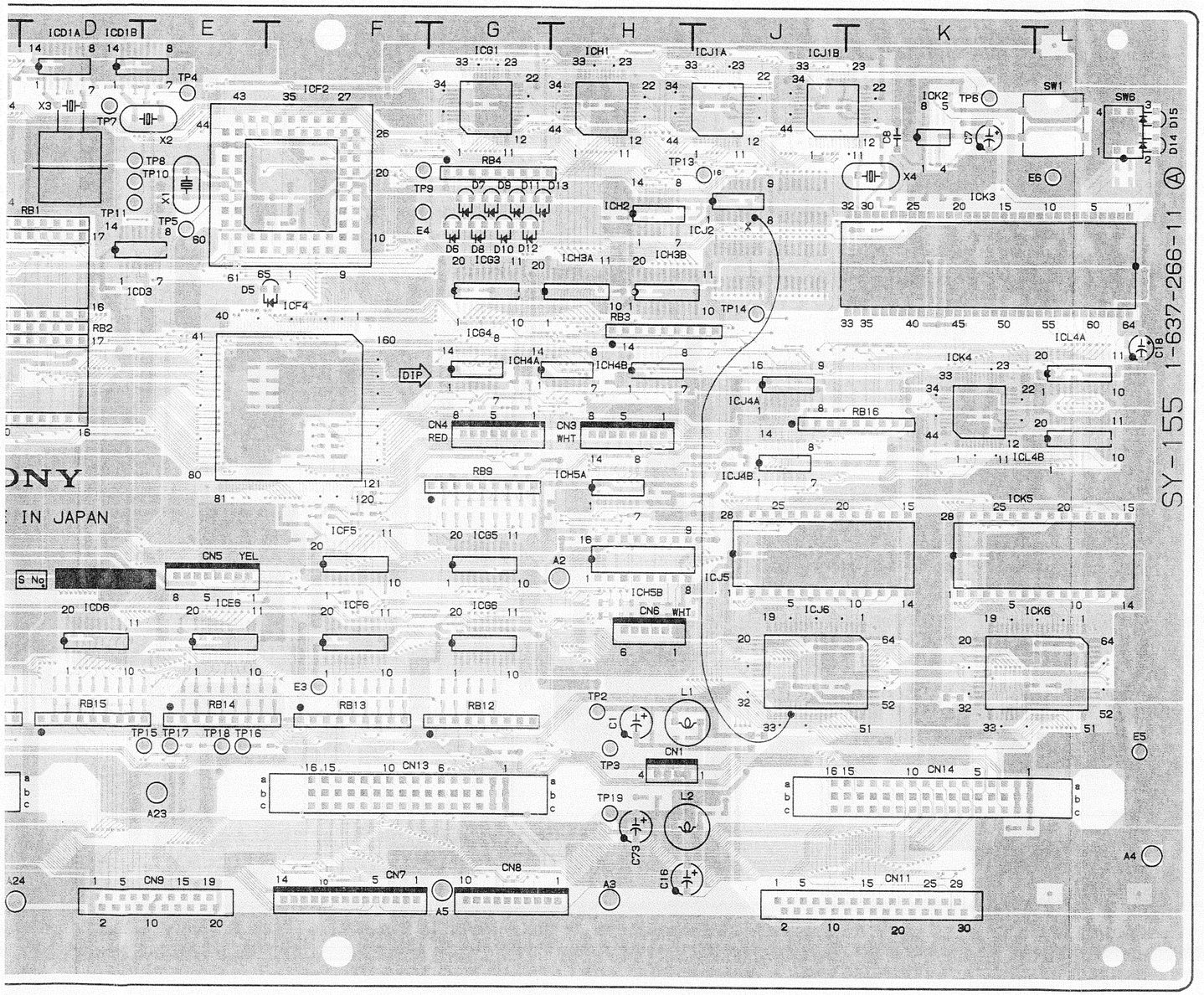

B-57-1(a)

D1	B-1	ICH1	H-1	X1	E-2
D2	B-1	ICH2	H-2	X2	E-2
D3	B-1	ICH3A	H-3	X3	D-1
D4	B-1	ICH3B	H-3	X4	K-2
D5	E-3	ICH4A	G-4		
D6	G-3	ICH4B	H-4		
D7	G-2	ICH5A	H-5		
D8	G-3	ICH5B	H-5		
D9	G-2	ICJ1A	J-1		
D10	G-3	ICJ1B	J-1		
D11	G-2	ICJ2	J-3		
D12	G-3	ICJ4A	J-4		
D13	G-2	ICJ4B	J-4		
D14	L-2	ICJ5	J-5		
D15	L-2	ICJ6	J-6		
D16	B-1	ICK2	K-1		
		ICK3	K-2		
E2	A-1	ICK4	K-4		
E3	F-6	ICK5	K-5		
E4	F-3	ICK6	L-6		
E5	L-7	ICL4A	L-4		
E6	L-2	ICL4B	L-4		
ICA4	A-4	SW1	L-1		
ICA5	A-5	SW3	B-4		
ICA6	A-6	SW5	A-4		
ICB5	B-5	SW6	L-1		
ICB6	B-6				
ICC1	C-1	TP2	H-6		
ICC2	C-2	TP3	H-7		
ICC3	B-3	TP4	E-1		
ICC4	C-4	TP5	E-3		
ICC6	C-6	TP6	K-1		
ICD1A	D-1	TP7	D-2		
ICD1B	D-1	TP8	E-2		
ICD3	D-3	TP9	F-2		
ICD6	D-6	TP10	E-2		
ICE6	E-6	TP11	D-2		
ICF2	F-1	TP12	C-2		
ICF4	F-3	TP13	H-2		
ICF5	F-5	TP14	J-3		
ICF6	F-6	TP15	E-7		
ICG1	G-1	TP16	E-7		
ICG3	G-3	TP17	E-7		
ICG4	G-4	TP18	E-7		
ICG5	G-5	TP19	H-7		
ICG6	G-6				

Applied Serial No.	UC 20001 to 20015 EK 50001 to 50035
Jumpers that have been soldered or cut.	ICJ2-6 —✕— ICJ6-37 ICJ2-7 —— ICJ6-37

B-58-1(a)

SY-155A SY-15

SY-155A BOARD (PCM-7050)
(1-637-266-11)
Solder Side

Serial No. UC 20001 to 20015
EK 50001 to 50035

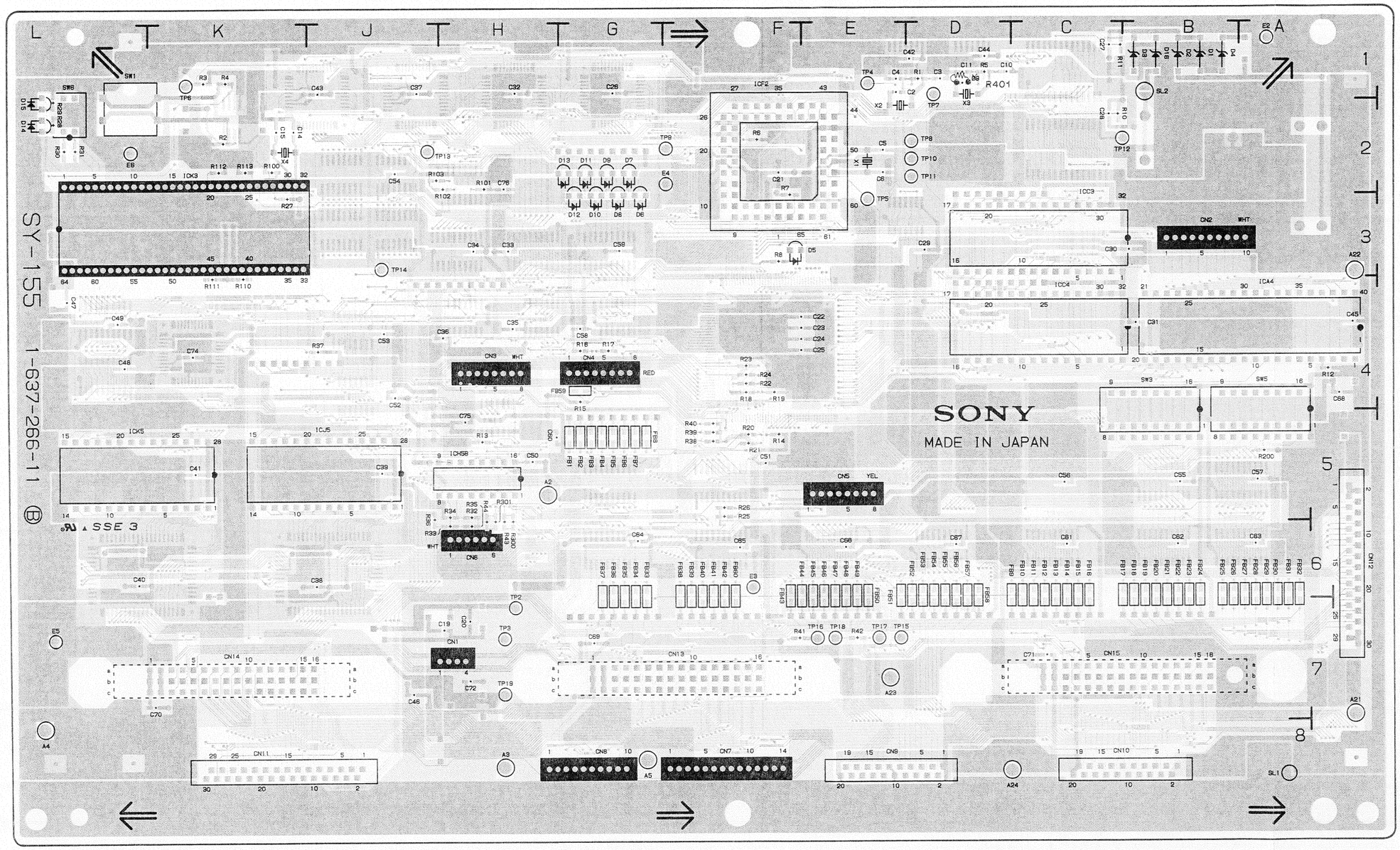

SOLDER SIDE PATTERN 1-637-266-11
COMPONENT SIDE PATTERN 1-637-266-11

Applied Serial No. UC 20001 to 20015 EK 50001 to 50035	
Parts that have been changed.	C9 → R401

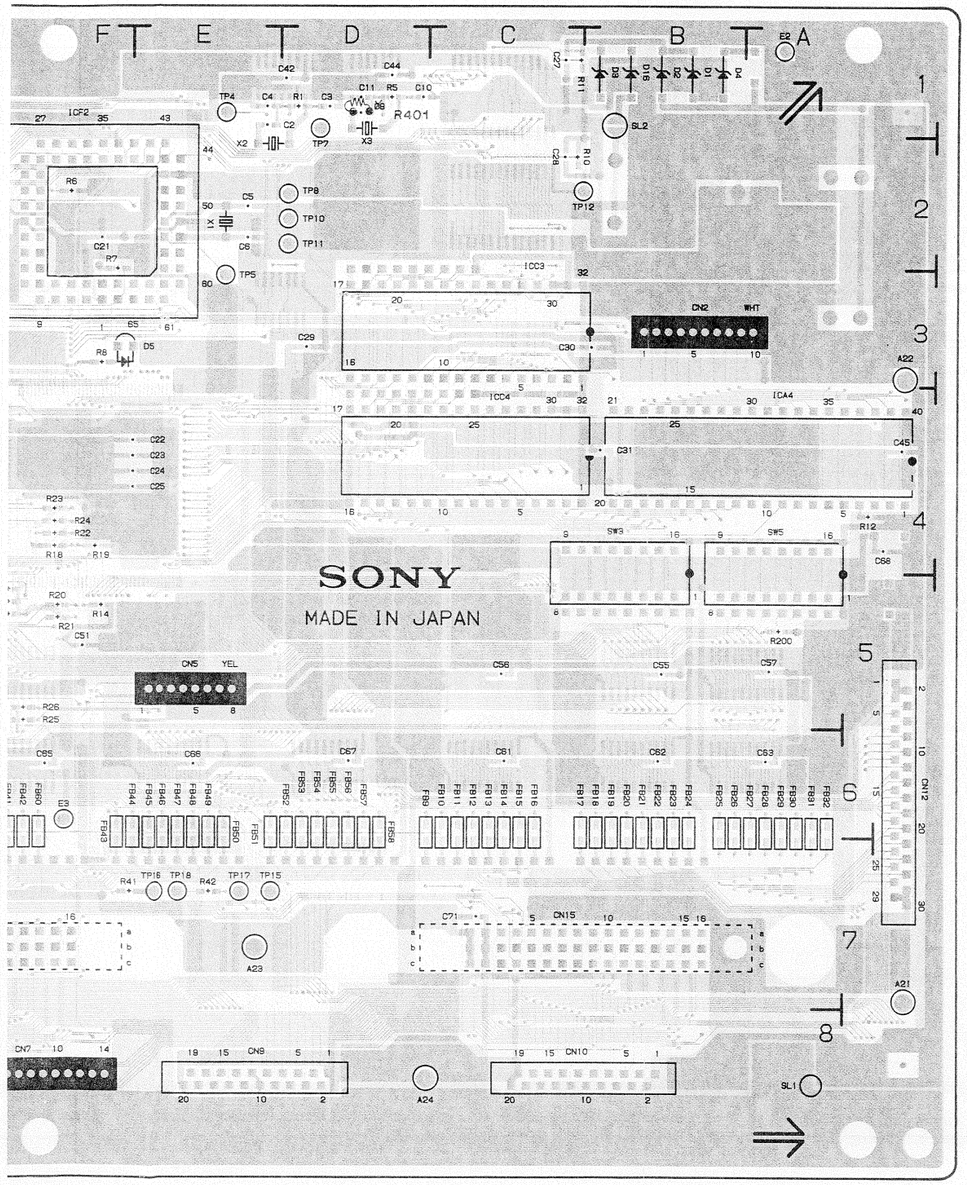

Applied Serial No. UC 20001 to 20015 EK 50001 to 50035	
Parts that have been changed.	C9 → R401

D1	B-1	ICH1	H-1	X1	E-2
D2	B-1	ICH2	H-2	X2	E-2
D3	B-1	ICH3A	H-3	X3	D-1
D4	B-1	ICH3B	H-3	X4	K-2
D5	E-3	ICH4A	G-4		
D6	G-3	ICH4B	H-4		
D7	G-2	ICH5A	H-5		
D8	G-3	ICH5B	H-5		
D9	G-2	ICJ1A	J-1		
D10	G-3	ICJ1B	J-1		
D11	G-2	ICJ2	J-3		
D12	G-3	ICJ4A	J-4		
D13	G-2	ICJ4B	J-4		
D14	L-2	ICJ5	J-5		
D15	L-2	ICJ6	J-5		
D16	B-1	ICK2	K-1		
		ICK3	K-2		
E2	A-1	ICK4	K-4		
E3	F-6	ICK5	K-5		
E4	F-3	ICK6	L-5		
E5	L-7	ICL4A	L-4		
E6	L-2	ICL4B	L-4		
ICA4	A-4	SW1	L-1		
ICA5	A-5	SW3	B-4		
ICA6	A-5	SW5	A-4		
ICB5	B-5	SW6	L-1		
ICB6	B-6				
ICC1	C-1	TP2	H-6		
ICC2	C-2	TP3	H-7		
ICC3	B-3	TP4	E-1		
ICC4	C-4	TP5	E-3		
ICC6	C-6	TP6	K-1		
ICD1A	D-1	TP7	D-2		
ICD1B	D-1	TP8	E-2		
ICD3	D-3	TP9	F-2		
ICD6	D-6	TP10	E-2		
ICE6	E-5	TP11	D-2		
ICF2	F-1	TP12	C-2		
ICF4	F-3	TP13	H-2		
ICF5	F-5	TP14	J-3		
ICF6	F-5	TP15	E-7		
ICG1	G-1	TP16	E-7		
ICG3	G-3	TP17	E-7		
ICG4	G-4	TP18	E-7		
ICG5	G-5	TP19	H-7		
ICG6	G-6				

VR-109 BOARD (PCM-7050)
(1-637-284-13)
Component Side

Serial No. UC 20016 and higher
EK 50036 and higher

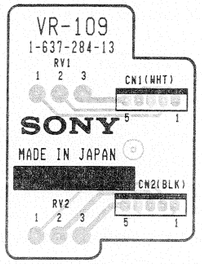

SOLDER SIDE PATTERN 1-637-284-13

SY-155A BOARD (PCM-7050)
(1-637-266-12)
Component Side

Serial No. UC 20016 and higher
EK 50036 and higher

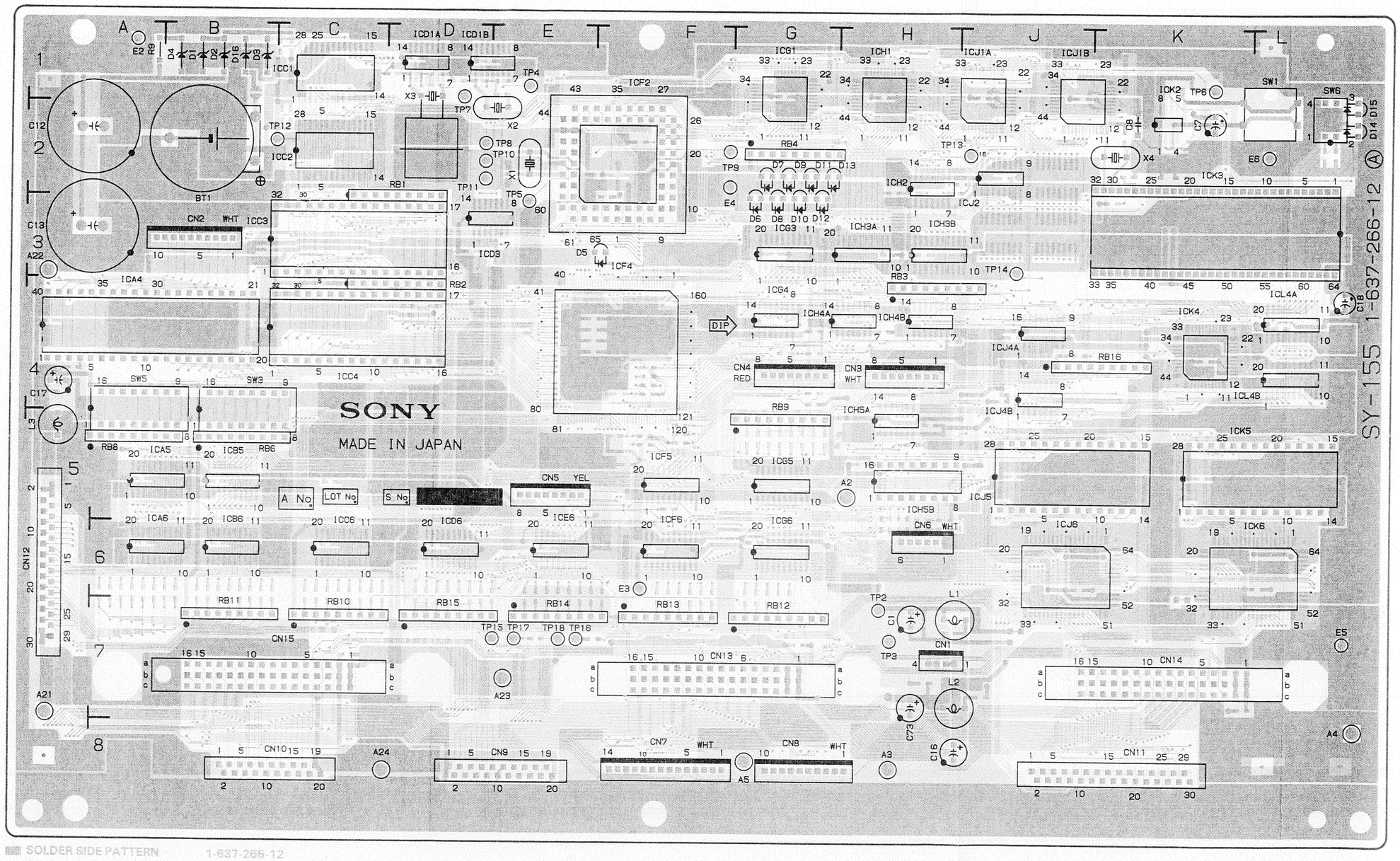

SOLDER SIDE PATTERN 1-637-266-12
COMPONENT SIDE PATTERN 1-637-266-12

IC 20016 and higher
IK 50036 and higher

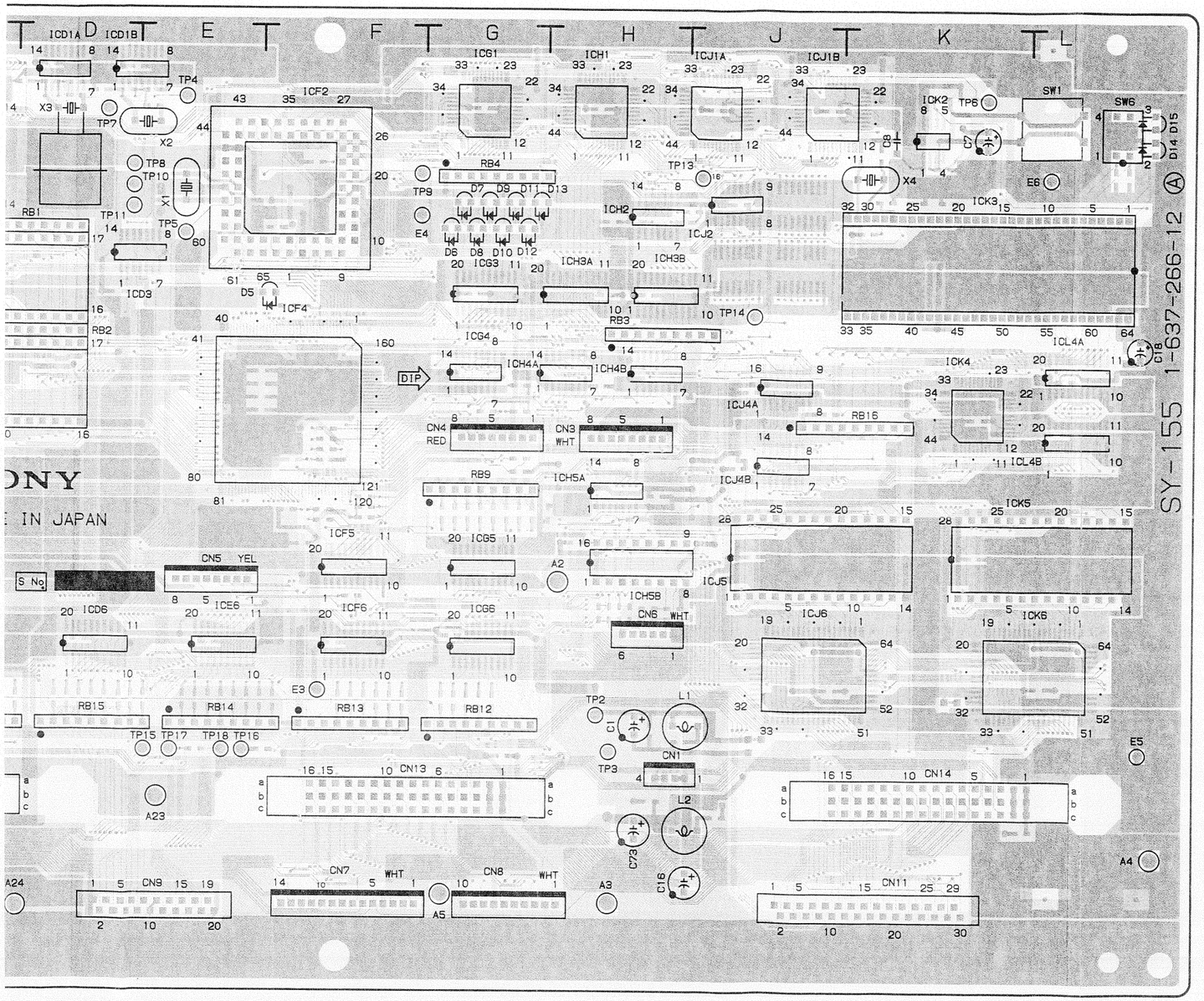

B-57-1(b)

D1	B-1	ICH1	H-1	X1	E-2
D2	B-1	ICH2	H-2	X2	E-2
D3	B-1	ICH3A	H-3	X3	D-1
D4	B-1	ICH3B	H-3	X4	K-2
D5	E-3	ICH4A	G-4		
D6	G-3	ICH4B	H-4		
D7	G-2	ICH5A	H-5		
D8	G-3	ICH5B	H-5		
D9	G-2	ICJ1A	J-1		
D10	G-3	ICJ1B	J-1		
D11	G-2	ICJ2	J-3		
D12	G-3	ICJ4A	J-4		
D13	G-2	ICJ4B	J-4		
D14	L-2	ICJ5	J-5		
D15	L-2	ICJ6	J-5		
D16	B-1	ICK2	K-1		
		ICK3	K-2		
E2	A-1	ICK4	K-4		
E3	F-6	ICK5	K-5		
E4	F-3	ICK6	L-5		
E5	L-7	ICL4A	L-4		
E6	L-2	ICL4B	L-4		
ICA4	A-4	SW1	L-1		
ICA5	A-5	SW3	B-4		
ICA6	A-5	SW5	A-4		
ICB5	B-5	SW6	L-1		
ICB6	B-6				
ICC1	C-1	TP2	H-6		
ICC2	C-2	TP3	H-7		
ICC3	B-3	TP4	E-1		
ICC4	C-4	TP5	E-3		
ICC6	C-6	TP6	K-1		
ICD1A	D-1	TP7	D-2		
ICD1B	D-1	TP8	E-2		
ICD3	D-3	TP9	F-2		
ICD6	D-6	TP10	E-2		
ICE6	E-5	TP11	D-2		
ICF2	F-1	TP12	C-2		
ICF4	F-3	TP13	H-2		
ICF5	F-5	TP14	J-3		
ICF6	F-5	TP15	E-7		
ICG1	G-1	TP16	E-7		
ICG3	G-3	TP17	E-7		
ICG4	G-4	TP18	E-7		
ICG5	G-5	TP19	H-7		
ICG6	G-6				

B-58-1(b)

SY-155A

SY-155A BOARD (PCM-7050)
(1-637-266-12)
Solder Side

Serial No. UC 20016 and higher
EK 50036 and higher

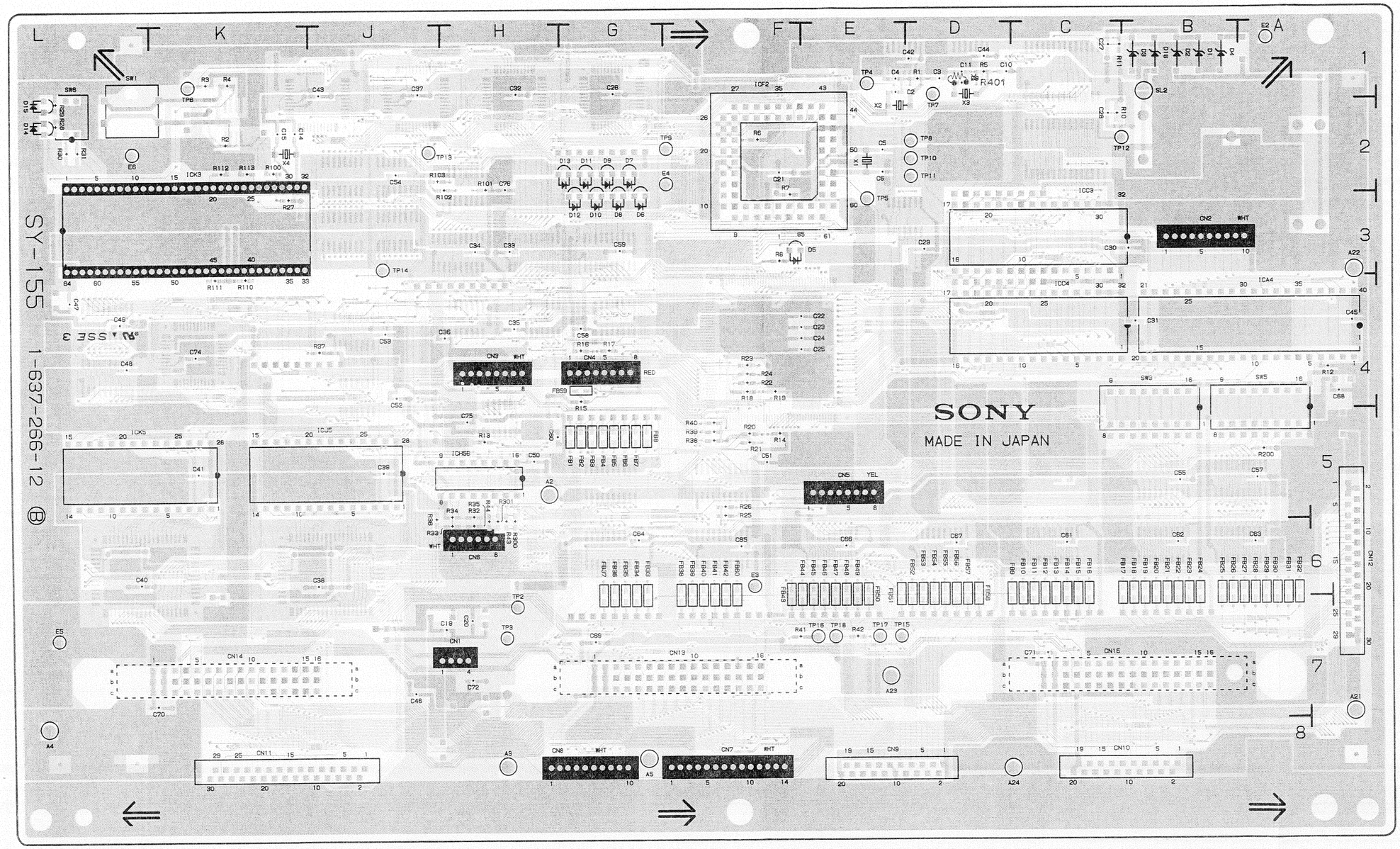

SOLDER SIDE PATTERN 1-637-266-12
COMPONENT SIDE PATTERN 1-637-266-12

Applied Serial No. UC 20016 and higher EK 50036 and higher	
Parts that have been changed.	C9 → R401

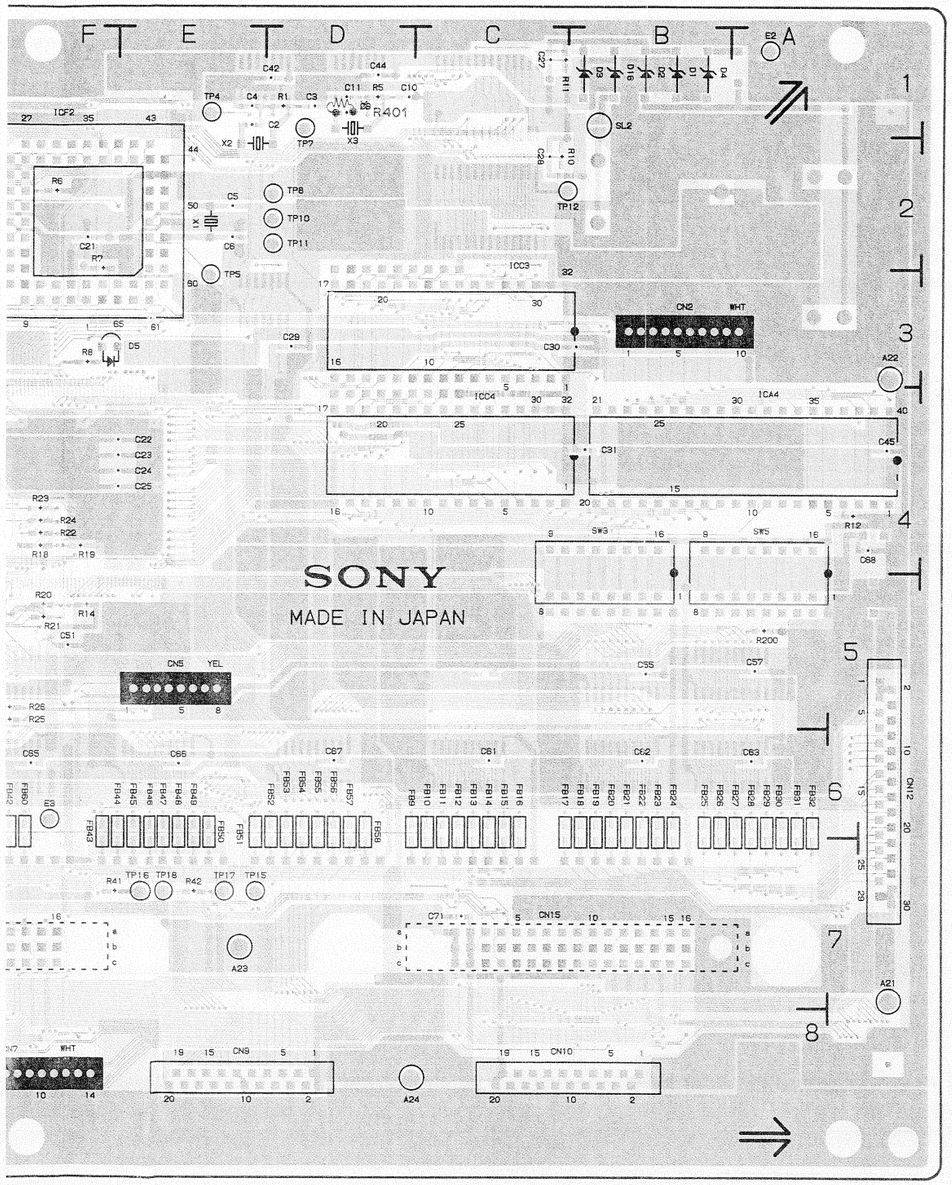

D1	B-1	ICH1	H-1	X1	E-2
D2	B-1	ICH2	H-2	X2	E-2
D3	B-1	ICH3A	H-3	X3	D-1
D4	B-1	ICH3B	H-3	X4	K-2
D5	E-3	ICH4A	G-4		
D6	G-3	ICH4B	H-4		
D7	G-2	ICH5A	H-5		
D8	G-3	ICH5B	H-5		
D9	G-2	ICJ1A	J-1		
D10	G-3	ICJ1B	J-1		
D11	G-2	ICJ2	J-3		
D12	G-3	ICJ4A	J-4		
D13	G-2	ICJ4B	J-4		
D14	L-2	ICJ5	J-5		
D15	L-2	ICJ6	J-5		
D16	B-1	ICK2	K-1		
		ICK3	K-2		
E2	A-1	ICK4	K-4		
E3	F-6	ICK5	K-5		
E4	F-3	ICK6	L-5		
E5	L-7	ICL4A	L-4		
E6	L-2	ICL4B	L-4		
ICA4	A-4	SW1	L-1		
ICA5	A-5	SW3	B-4		
ICA6	A-5	SW5	A-4		
ICB5	B-5	SW6	L-1		
ICB6	B-6				
ICC1	C-1	TP2	H-6		
ICC2	C-2	TP3	H-7		
ICC3	B-3	TP4	E-1		
ICC4	C-4	TP5	E-3		
ICC6	C-6	TP6	K-1		
ICD1A	D-1	TP7	D-2		
ICD1B	D-1	TP8	E-2		
ICD3	D-3	TP9	F-2		
ICD6	D-6	TP10	E-2		
ICE6	E-5	TP11	D-2		
ICF2	F-1	TP12	C-2		
ICF4	F-3	TP13	H-2		
ICF5	F-5	TP14	J-3		
ICF6	F-5	TP15	E-7		
ICG1	G-1	TP16	E-7		
ICG3	G-3	TP17	E-7		
ICG4	G-4	TP18	E-7		
ICG5	G-5	TP19	H-7		
ICG6	G-6				

Applied Serial No. UC 2001b and higher EK 50036 and higher	
Parts that have been changed.	C9 → R401

SECTION C
SCHEMATIC DIAGRAMS

AC-104 BOARD (PCM-7050)
AC,Fuse

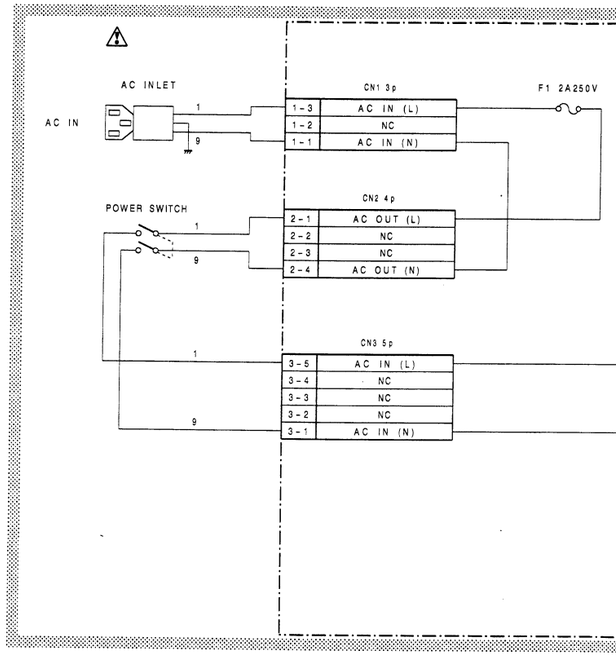

AC-104

AC-104 BOARD (PCM-7050)
AC,Fuse

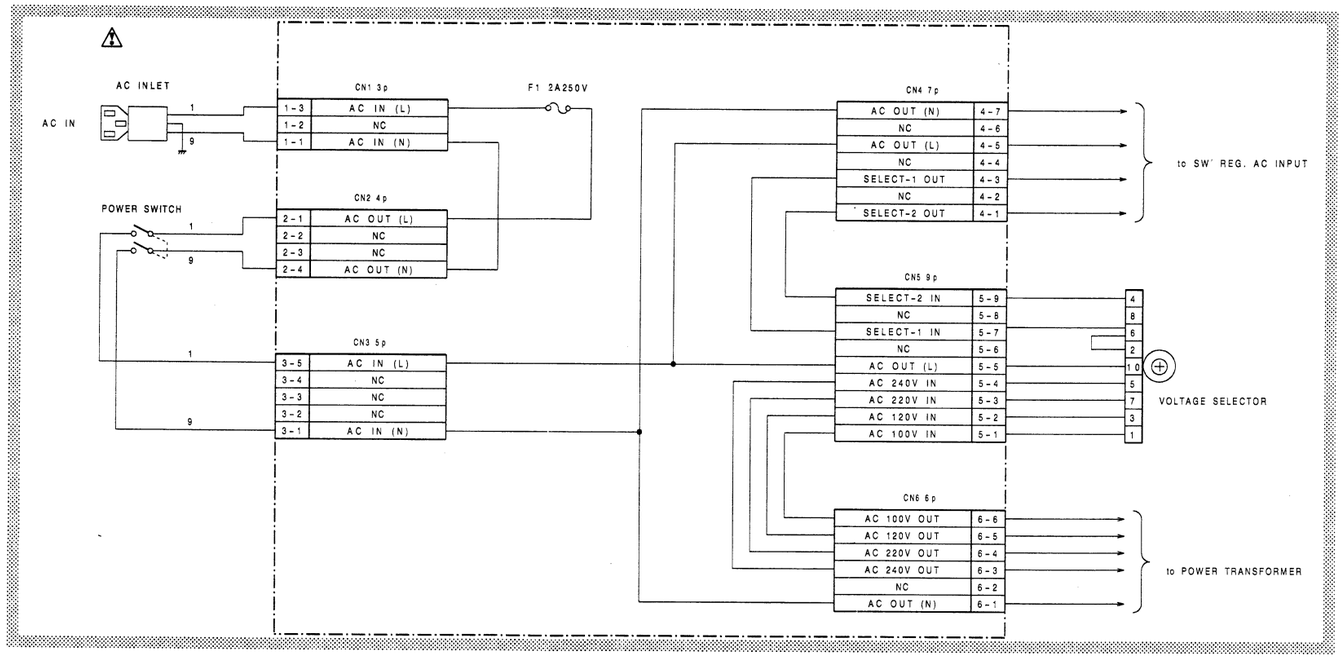

NOTE:

The shaded and ⚠ -marked components are critical to safety.
Replace only with same components as specified.

AC-104 BOARD
BOARD NO.1-637-275-11 & HIGHER
PCM-7050

ADA-18(1/2) BOARD (PCM-7050)
REC Audio,A/D Converter

Serial No. UC 20001 to 20055
EK 50001 to 50175

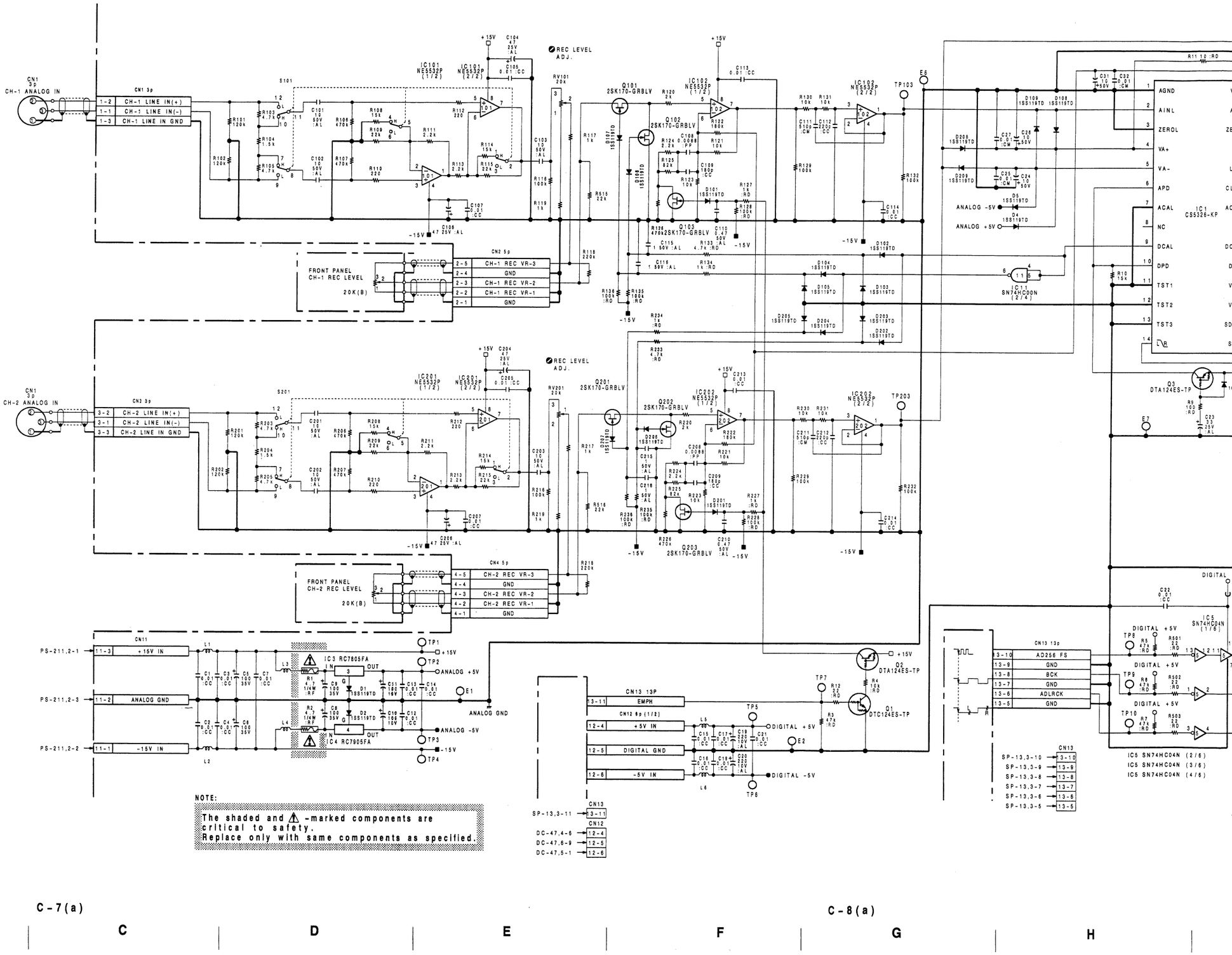

NOTE:
The shaded and ⚠ -marked components are critical to safety. Replace only with same components as specified.

C-7(a) C-8(a)

A B C D E F G H

ADA-18(1/2)

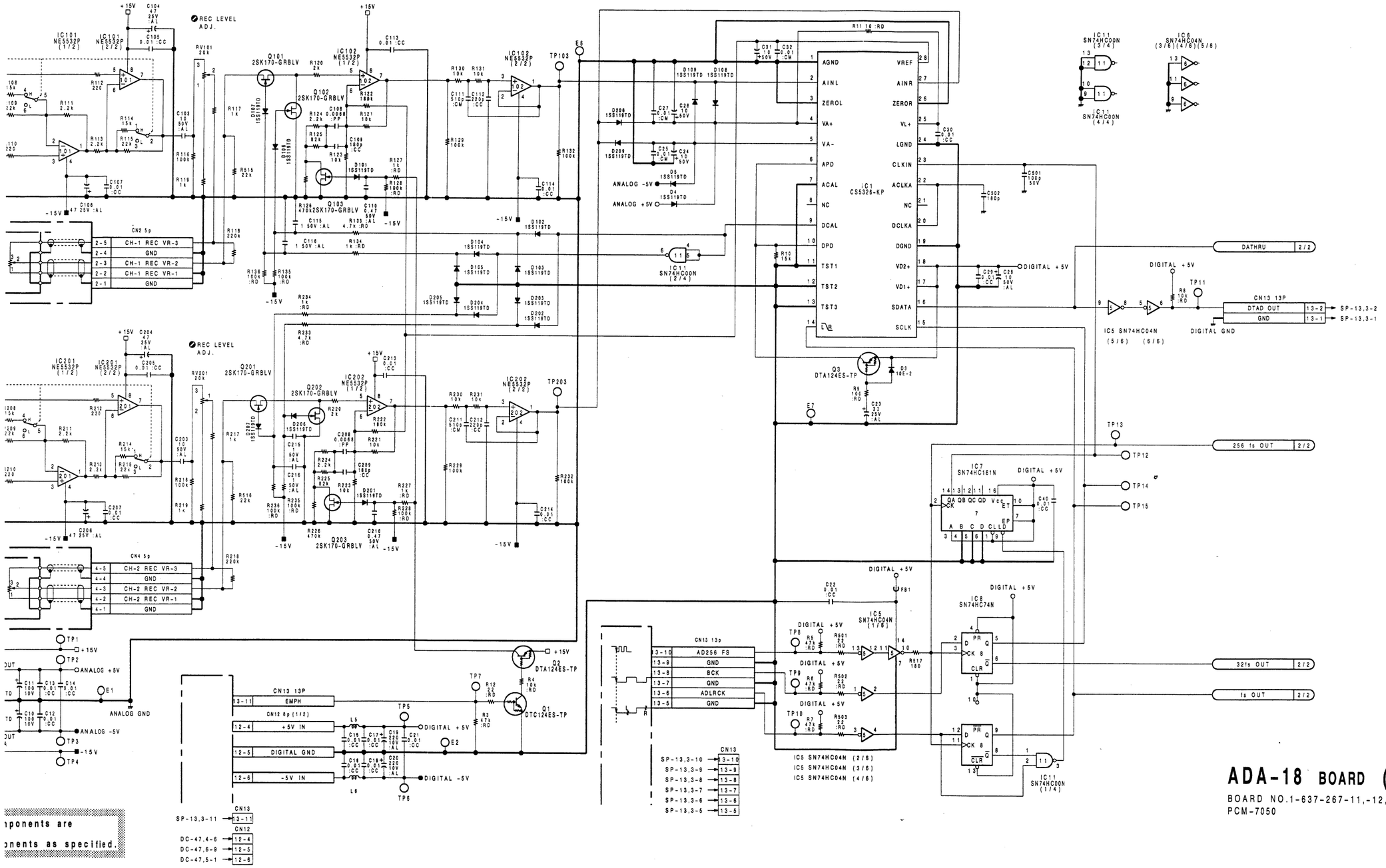

ponents are
onents as specified.

ADA-18 BOARD (1/2)

BOARD NO.1-637-267-11,-12,-13
PCM-7050

C-8(a)

C-9(a)

E F G H I J K L

ADA-18(1/2) BOARD (PCM-7050)
REC Audio,A/D Converter

Serial No. UC 20056 and higher
EK 50176 and higher

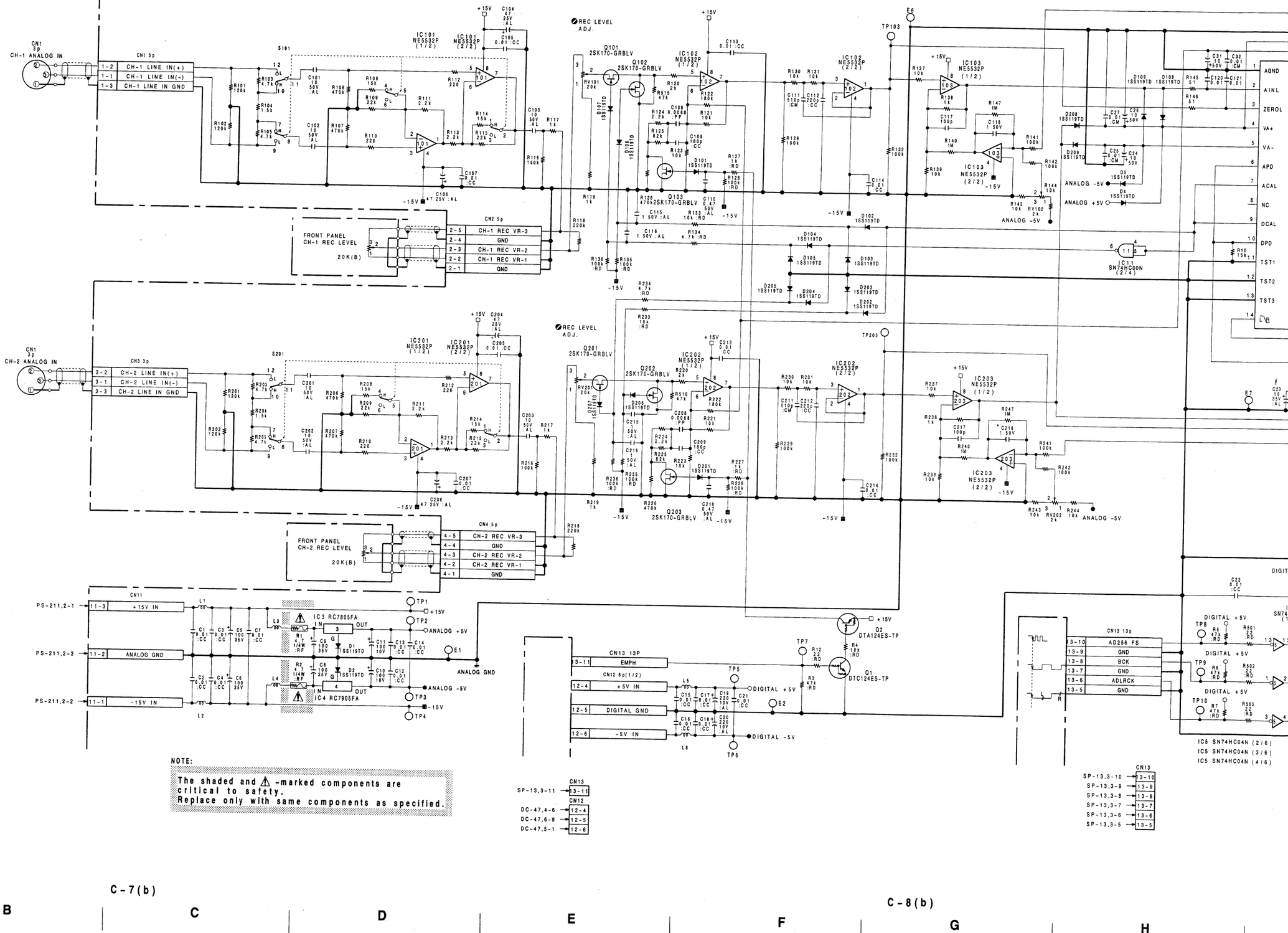

NOTE:
The shaded and ⚠ -marked components are critical to safety.
Replace only with same components as specified.

C-7(b)
C-8(b)

A B C D E F G H

ADA-18(1/2)

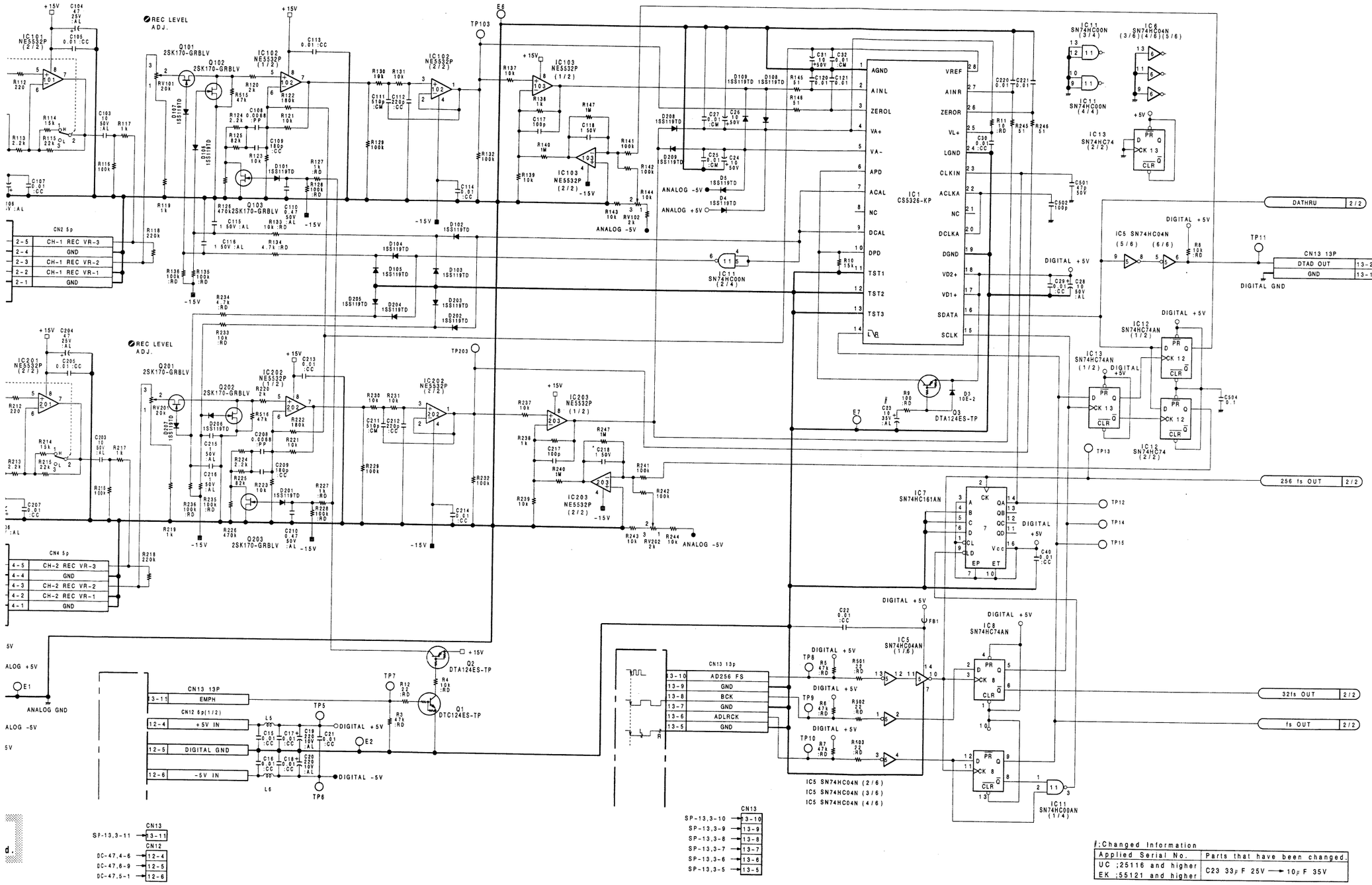

f:Changed Information

Applied Serial No.	Parts that have been changed.
UC ;25116 and higher EK ;55121 and higher	C23 33μF 25V → 10μF 35V

ADA-18 BOARD (1/2)

BOARD NO.1-637-267-14 & HIGHER
PCM-7050

C-8(b)

C-9(b)

ADA-18(2/2) BOARD (PCM-7050)
PB Audio,D/A Converter

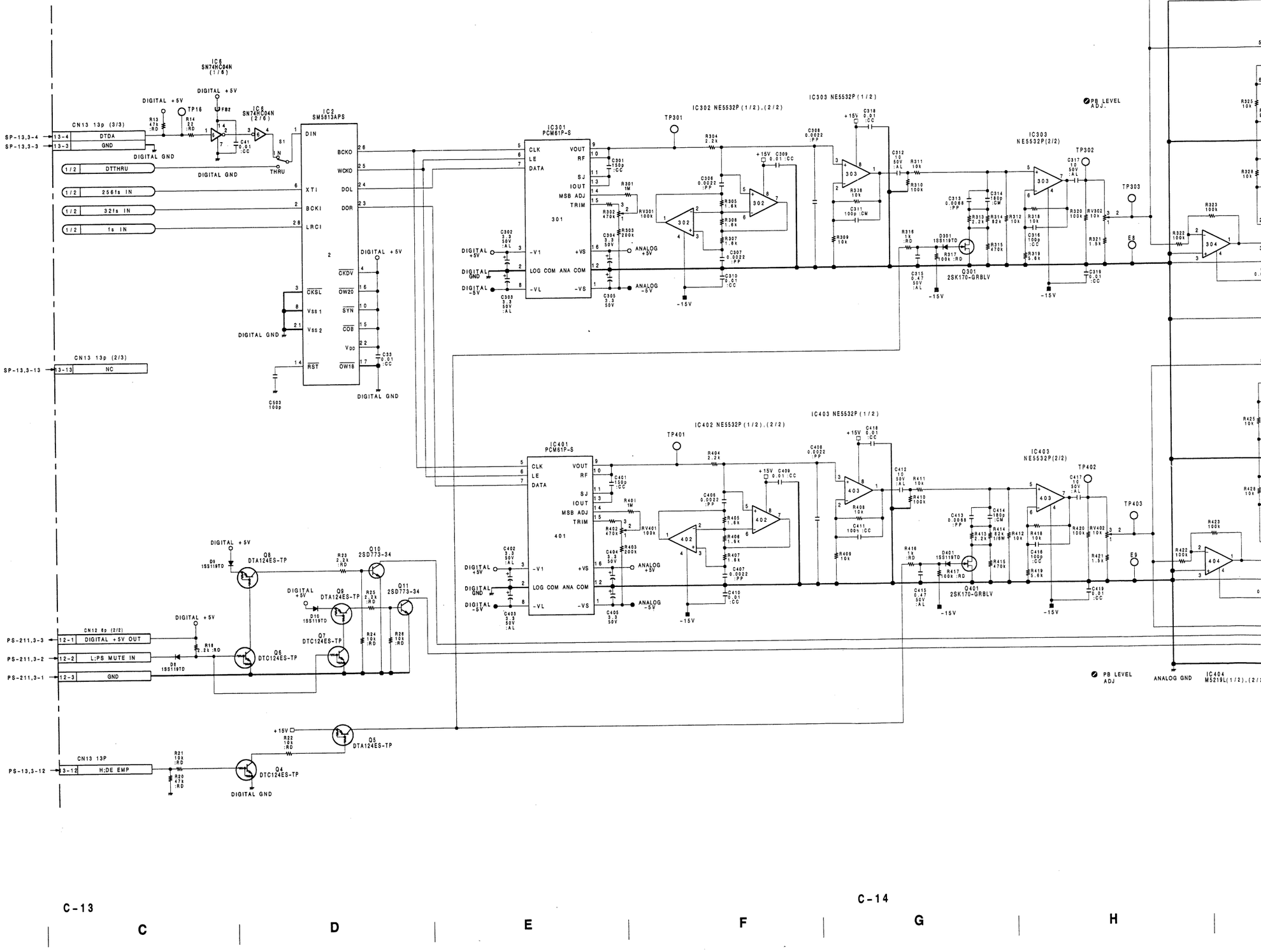

C-13 C-14

A B C D E F G H

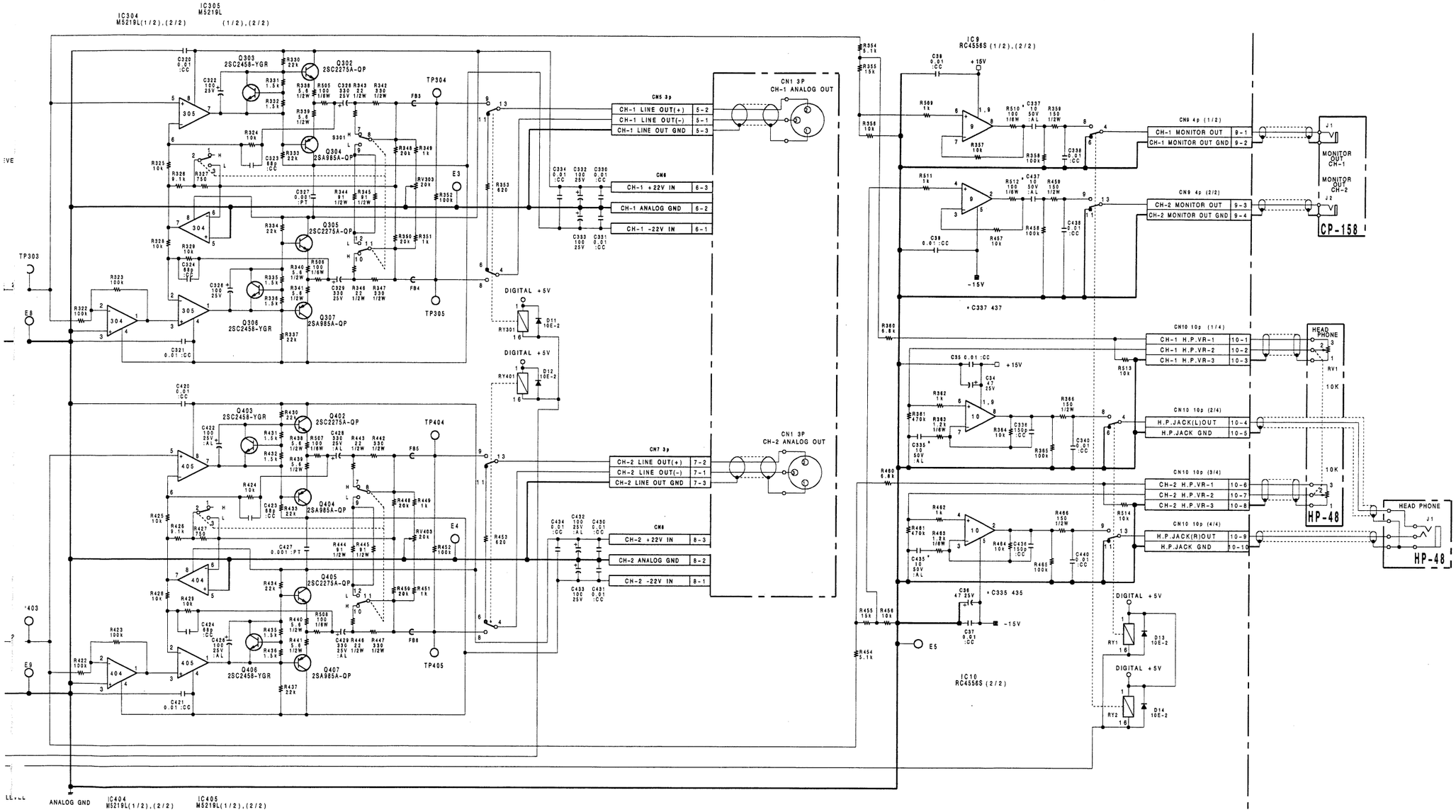

ADA-18 BOARD (2/2)

BOARD NO.1-637-267-11 & HIGHER
PCM-7050

C-15 C-16

I J K L M N O P

CP-157A BOARD (PCM-7050)
Connector(ANALOG IN)

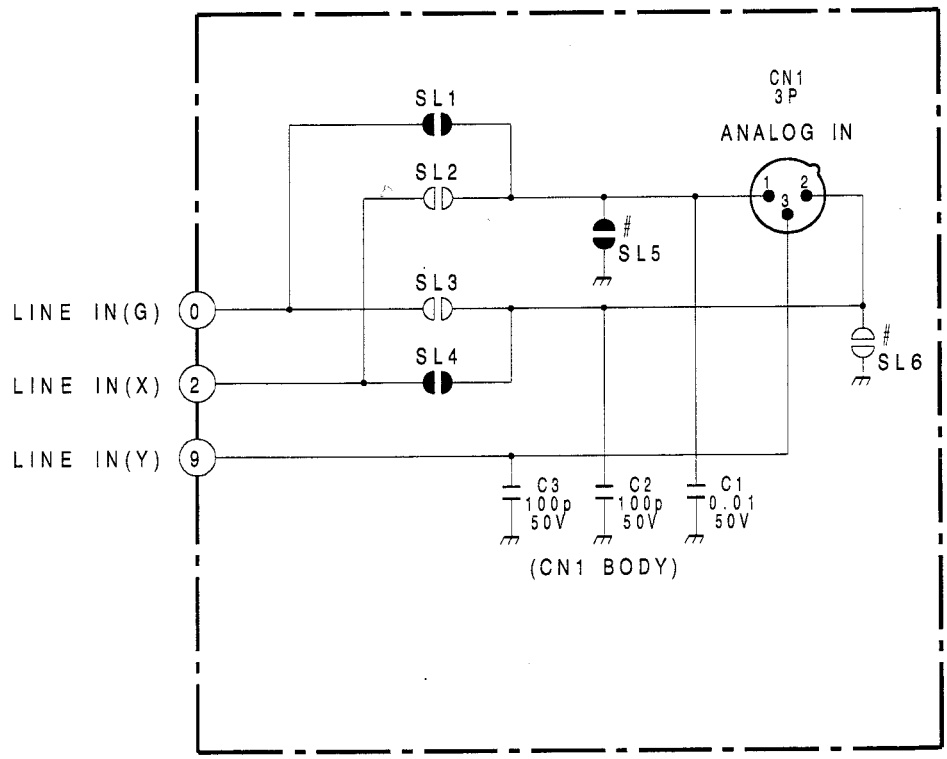

:Changed Information

Applied Serial No.	Parts that have been added.
UC:20026 and higher EK:50066 and higher	SL5 SL6

CP-157A BOARD

BOARD NO.1-637-277-11 & HIGHER
PCM-7050

A | B | C | D

CP-158 BOARD (PCM-7050)
Connector (MONITOR)

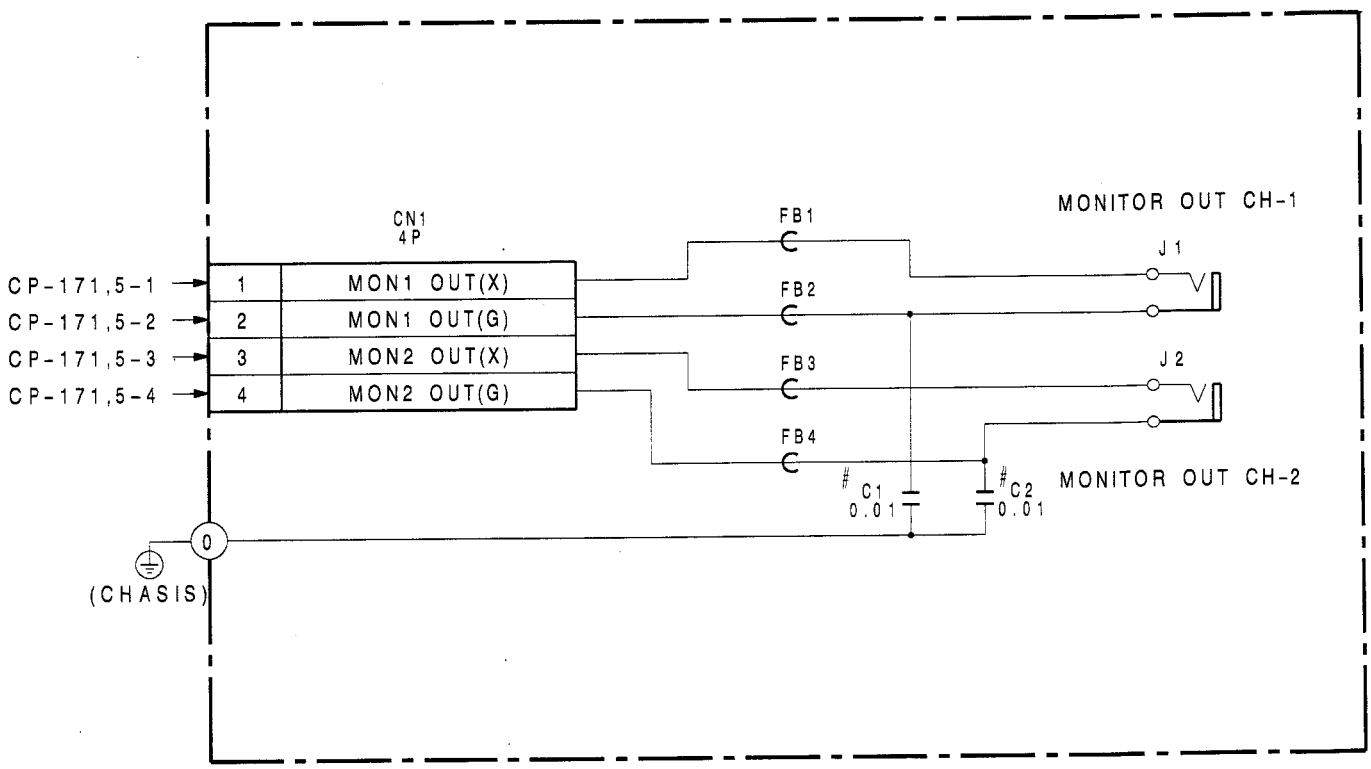

:Changed Information

Applied Serial No.	Parts that have been deleted.
UC;20026 and higher EK;50066 and higher	C1 C2

CP-158 BOARD

BOARD NO.1-637-282-11 & HIGHER
PCM-7050

A | B | C | D

CP-171 BOARD (PCM-7050)
Connector

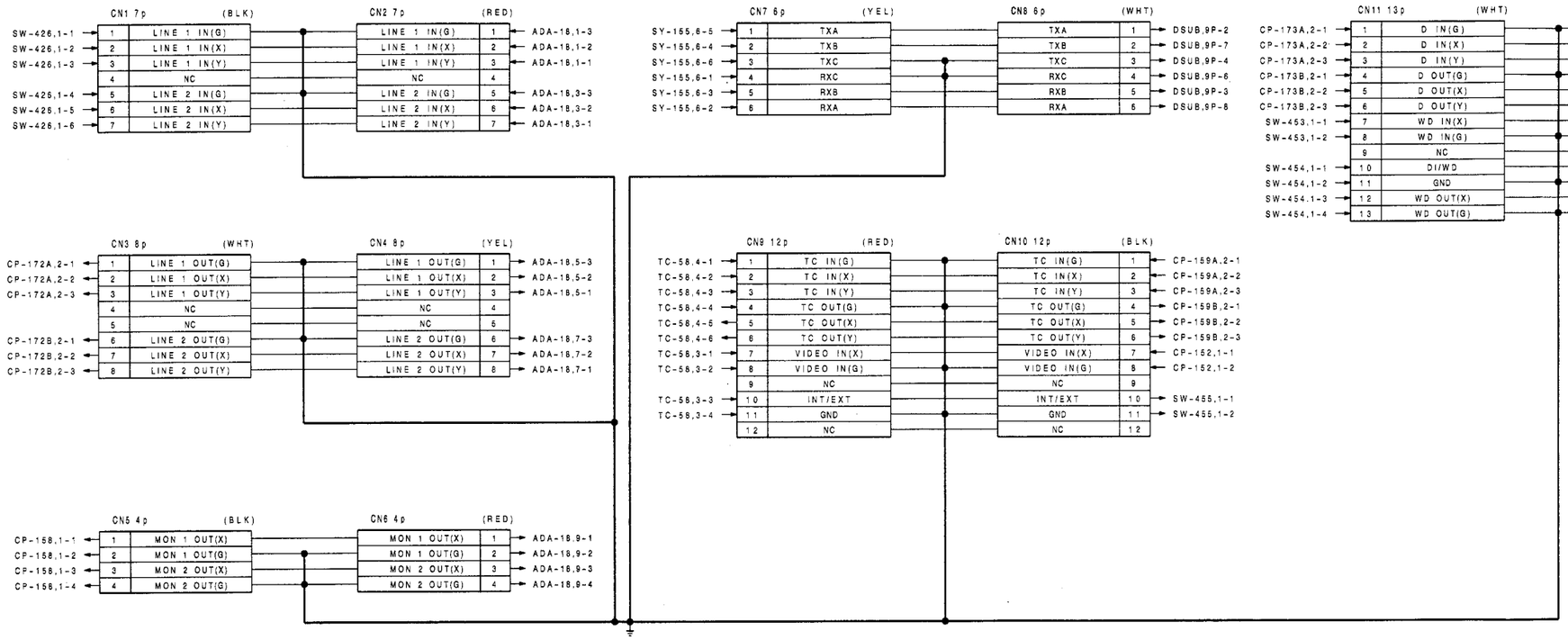

CP-171 BOARD
BOARD NO.1-637-276-11 & HIGHER
PCM-7050

CP-172A BOARD (PCM-7050)
Connector(ANALOG OUT)

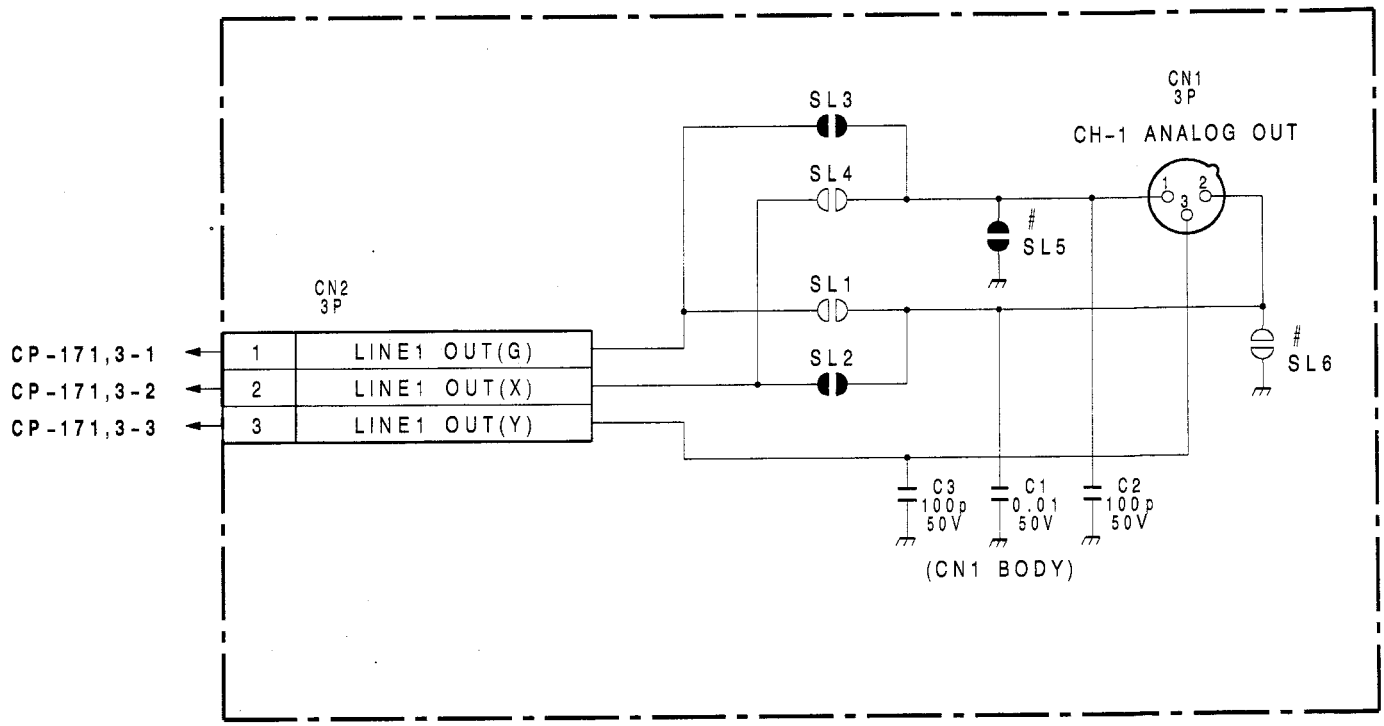

:Changed information

Applied Serial No.	Parts that have been added.
UC;20025 and higher EK;50066 and higher	SL5 SL6

CP-172A BOARD

BOARD NO.1-637-280-11 & HIGHER
PCM-7050

A | B | C | D

CP-172B BOARD (PCM-7050)
Connector(ANALOG OUT)

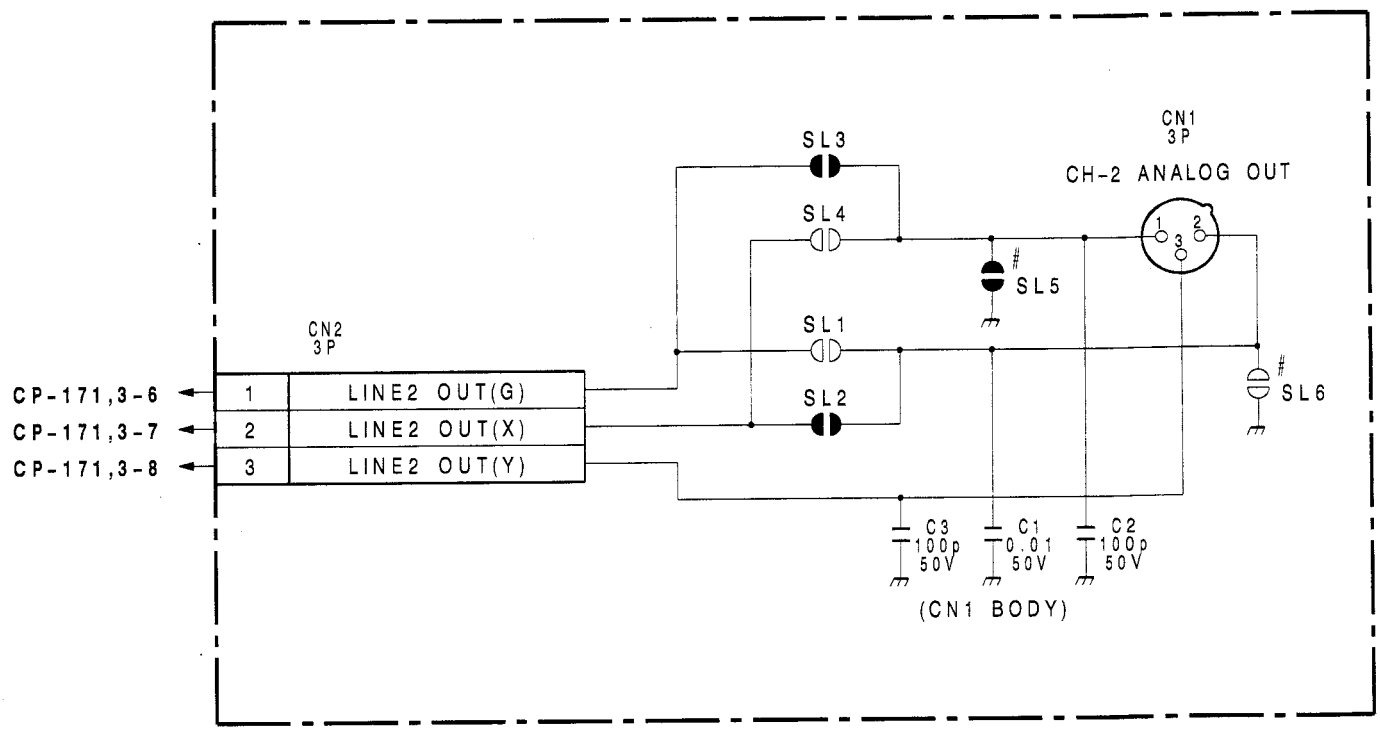

:Changed Information

Applied Serial No.	Parts that have been added.
UC;20025 and higher EK;50066 and higher	SL5 SL6

CP-172B BOARD

BOARD NO.1-637-281-11 & HIGHER
PCM-7050

A | B | C | D

CP-173A BOARD (PCM-7050)
Connector(DIGITAL IN)

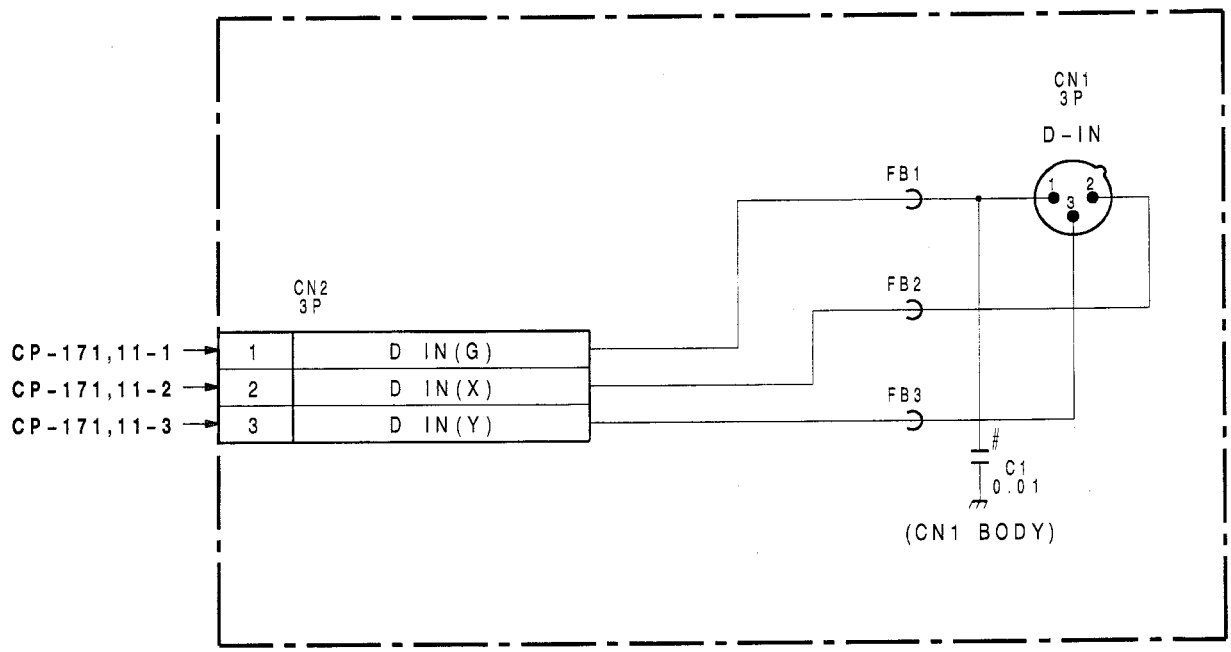

:Changed Information

Applied Serial No.	Parts that have been deleted.
UC;20026 and higher EK;50066 and higher	C1

CP-173A BOARD

BOARD NO.1-637-291-11 & HIGHER
PCM-7050

A | B | C | D

CP-173B BOARD (PCM-7050)
Connector(DIGITAL OUT)

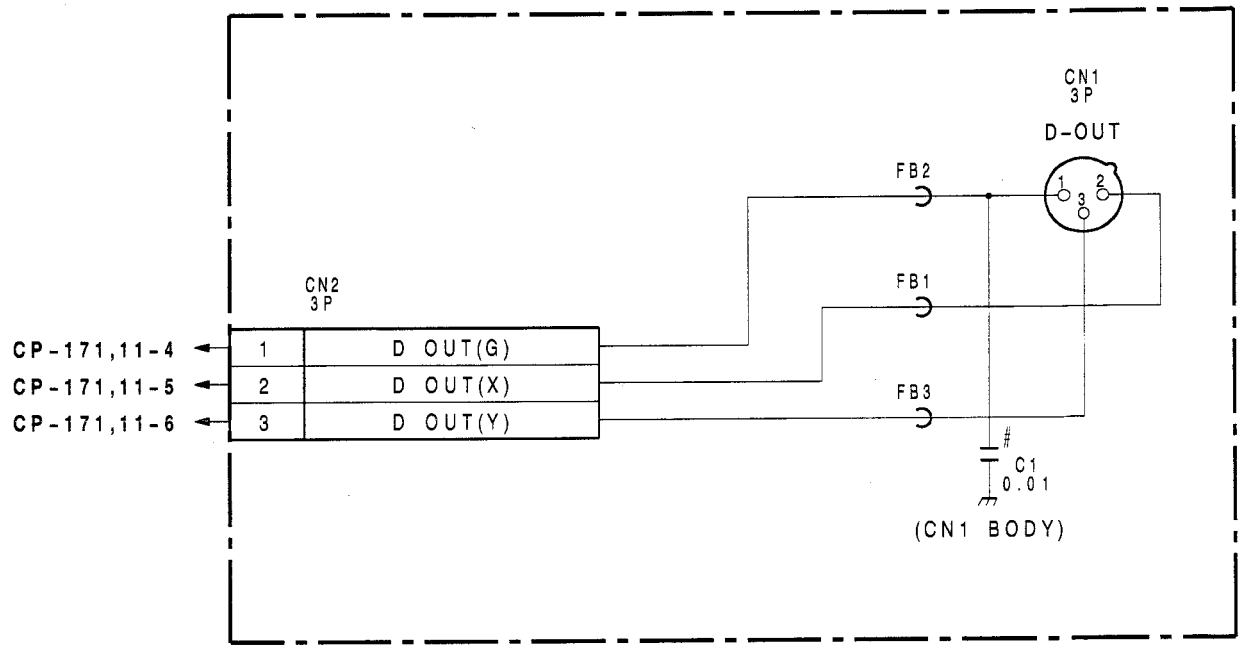

:Changed Information

Applied Serial No.	Parts that have been deleted.
UC:20026 and higher EK:50086 and higher	C1

CP-173B BOARD

BOARD NO.1-637-292-11 & HIGHER
PCM-7050

A | B | C | D

DC-47 BOARD (PCM-7050)
DC

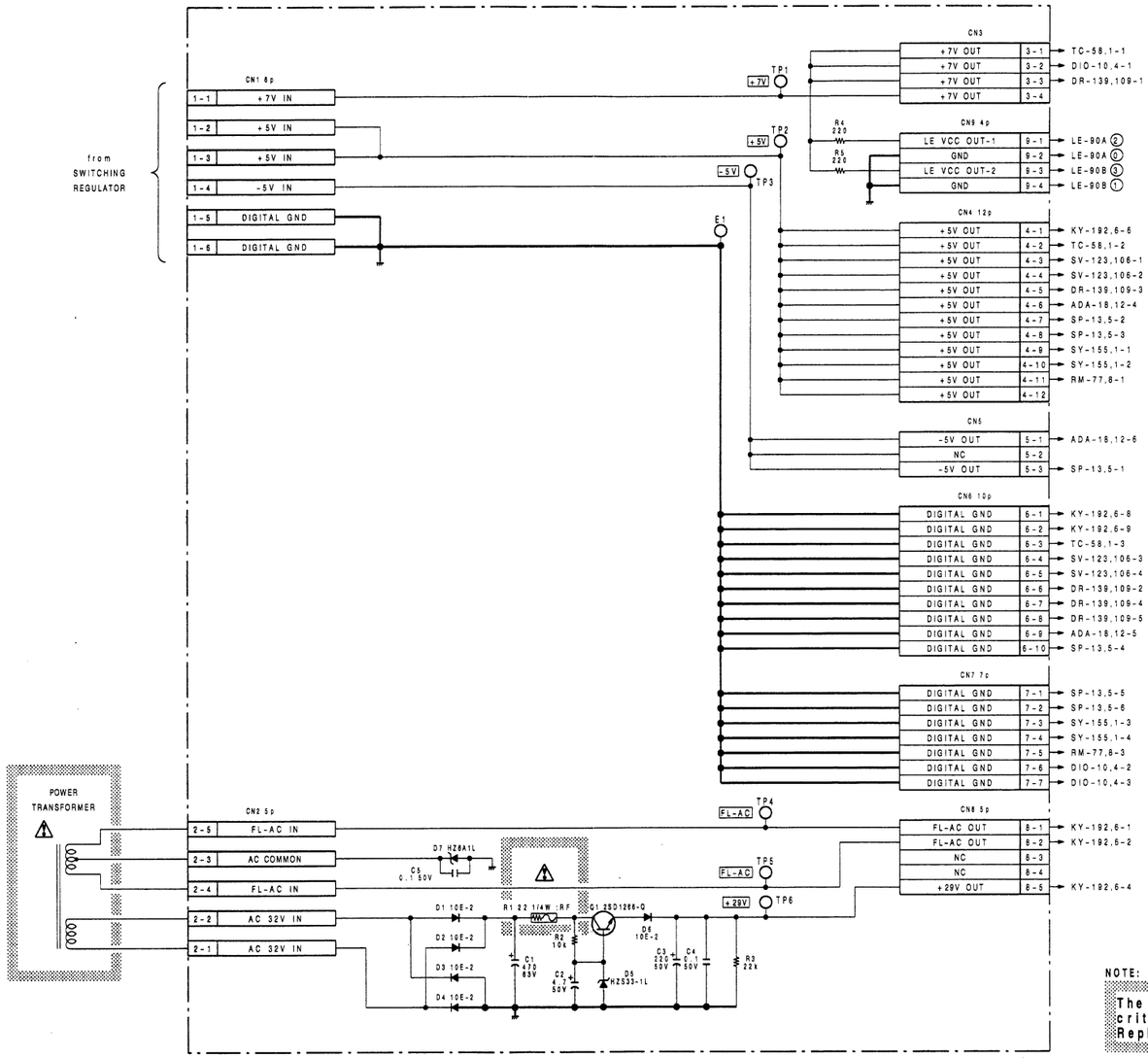

NOTE:
The shaded and ⚠ -marked components are critical to safety.
Replace only with same components as specified.

DC-47 BOARD
BOARD NO.1-637-274-11 & HIGHER
PCM-7050

DIO-10 BOARD (PCM-7050)
DIGITAL I/O

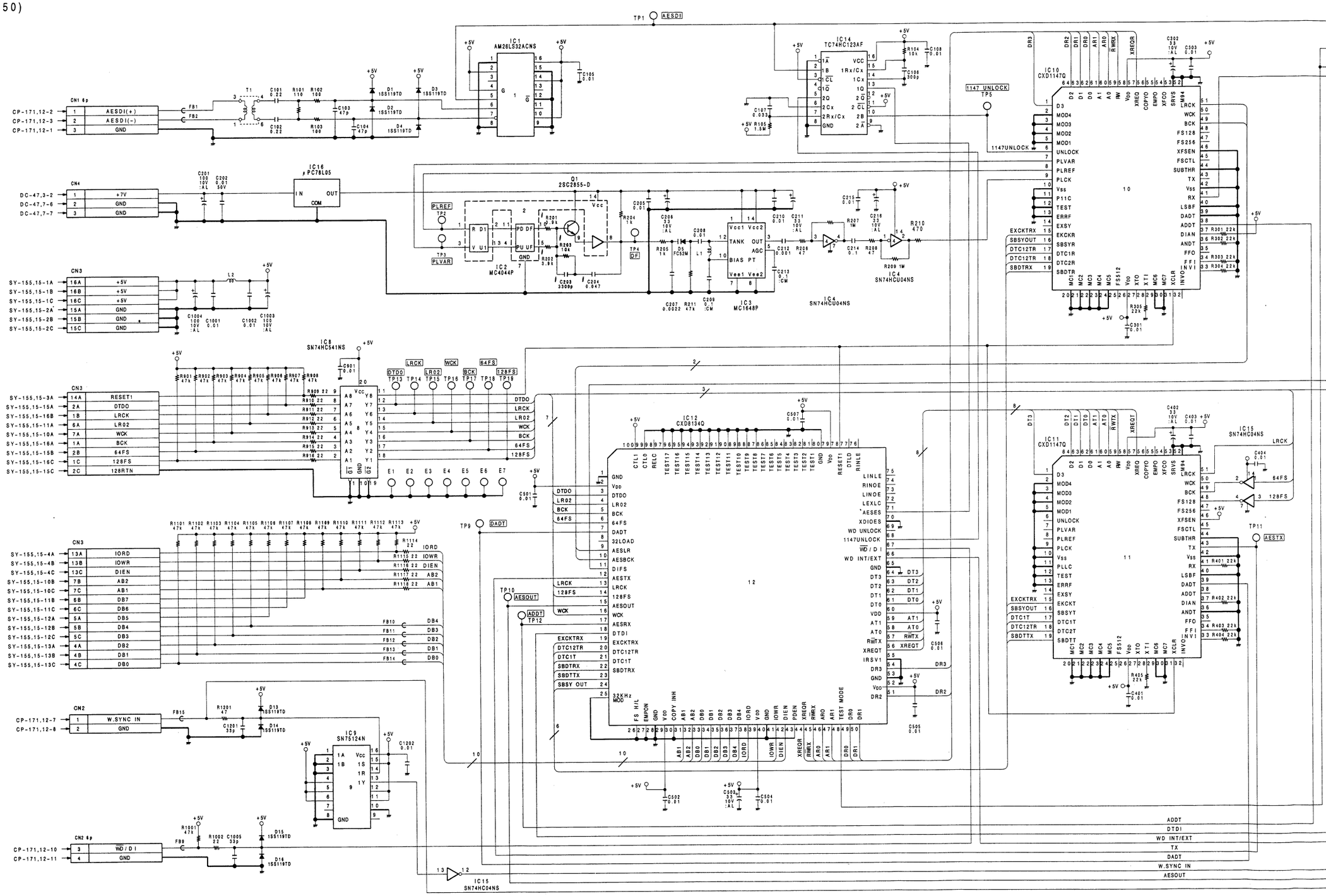

C-41 C-42

A B C D E F G H

DIO-10

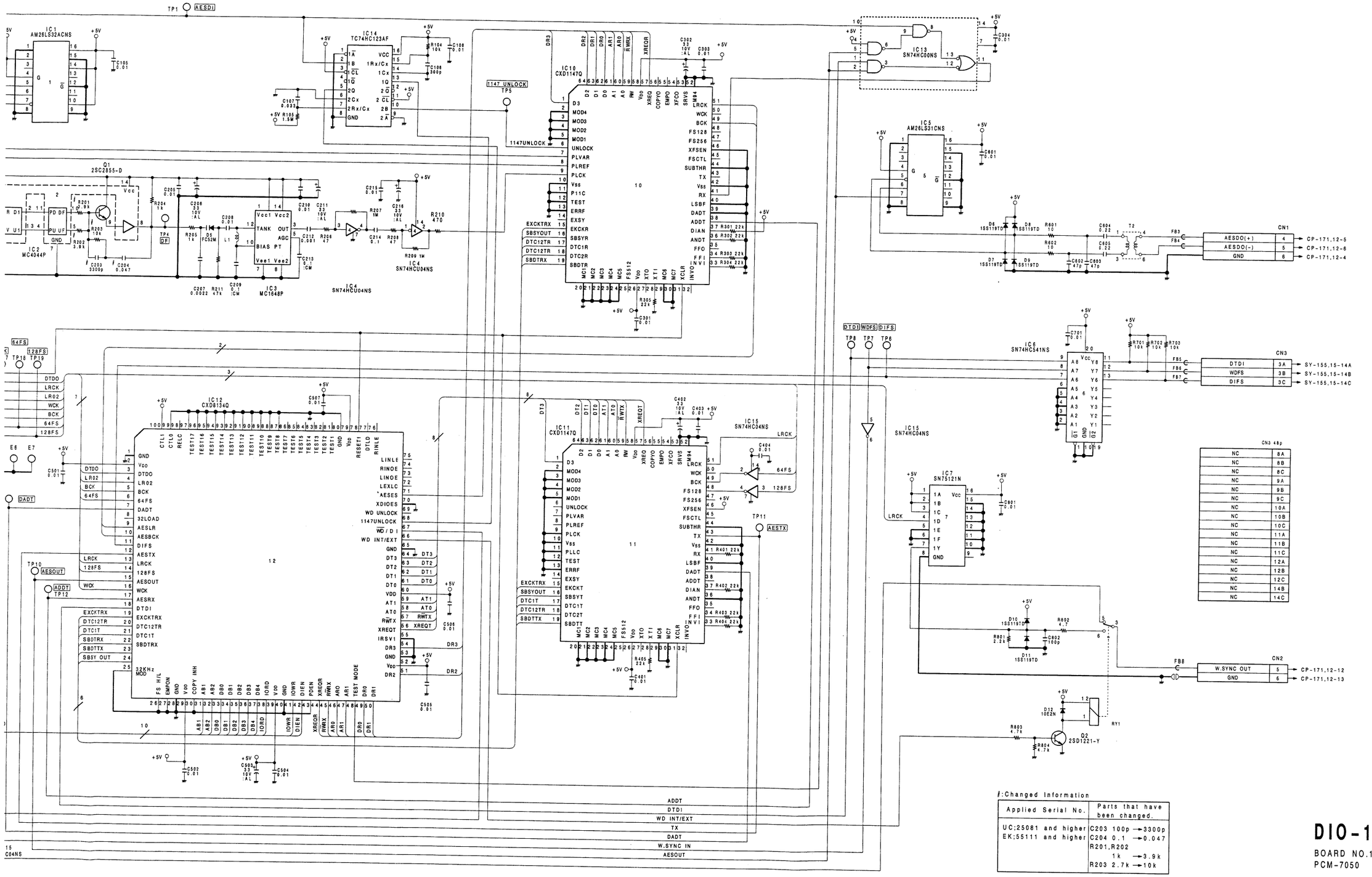

#:Changed Information

Applied Serial No.	Parts that have been changed.
UC;25081 and higher EK;55111 and higher	C203 100p →3300p C204 0.1 →0.047 R201,R202 1k →3.9k R203 2.7k →10k

DIO-10 BOARD

BOARD NO.1-637-289-11 & HIGHER
PCM-7050

DR-139 BOARD (PCM-7050)
Motor Drive,Sensor

CN101 FROM/TO DRUM MOTOR
DRUM MOTOR
1 COM
2 PG
3 FG
4 VG
5 HW-
6 HW+
7 HV+
8 HV-
9 HU-
10 HU+
11 VH
12 VL
13 UL
14 WL

CN102 FROM/TO CAP MOTOR
CAPSTAN MOTOR
LOADING MOTOR
ROTARY ENCODER
1 OUTB
2 GND
3 OUTA
4 Vcc
5 VS
6 GND
7 +7V
8 RS
9 LM+
10 LM-
11 RESTOP
12 REFWD
13 COM

CN103 FORM/TO REEL MOTOR
REEL MOTOR
1 +5V
2 RS
3 VST
4 GND
5 XTCK
6 RT
7 VSS
8 DIRT
9 FGT
10 FGS
11 DIRS
12 GND

CN104 FROM/TO MD
T END SENSOR
RECOGNITION SW
S END SENSOR
TENSION SENSOR
LIMIT SW
1 TLEDON
2 TPHOUT
3 GND
4 GND
5 SOFT
6 COM
7 RECEN
8 CASIN
9 COM
10 X1.5TP
11 SLEDON
12 SPHOUT
13 GND
14 GND
15 HE+
16 +B
17 HE-
18 GND
19 COM
20 LIMSW

CN105 FROM DEW SENSOR
DEW SENSOR
1 DEWSENS
2 GND

CN106 FROM/TO CASECOM MOTOR
SW-452
1 CCUP
2 CCDOWN
3 COM
4 CCM+
5 CCM-

CN107 TO PLUNGER
REEL PLUNGER
1 PLN+
2 PLN-

IC102 CX20174
IC101 CXA1418N
IC103 LM358PS
IC104 MC14053BF
IC105 MOTOR DRIVE UNIT
IC106 SN74HC14NS
IC107 SN74HC86NS
IC201 MB3793PF
IC202 SN74HC08NS
IC203 MB3793PF
IC204 TL7705ACPS
IC205 MC14066BF
IC206 TL431CPS
IC207 LM358PS
IC208 LM393PS (1/2)
IC209 LM393PS

Q101 DTC124EK-T14
Q102 DTC124EK-T14
Q103 2SA1162Y-TE8
Q104 2SA1242-Y
Q105 2SD1221-Y
Q201 DTC124EK-T14
Q202 DTC124EK-T14
Q203 DTC124EK-T14
Q204 DTC124EK-T14
Q205 DTC124EK-T14
Q206 DTC124EK-T14
Q207 2SB1040A-3
Q208 2SD1221-Y
Q209 DTA143TK-T14
Q210 DTA143TK-T14

D201 RK14
D202 1S2837-T1
D203 1S2837-T1
D204 1S2837-T1
D205 1S2837-T1
D206 1S2837-T1
D207 1S2837-T1
D208 1GE2N
D209 1S2837-T1
D210 1S2837-T1

DON
DDIR
DER
CDIR
TRTN
SRTN
VST
VSS
PLN+
PLN-
REFWD
LIMSW
RTLOCK
XTCK
DFG
CFG
LPG
RTFG
RSFG
PLNON
PLNKIK

TP1 LPG
TP2 DFG
TP3 CFG
TP4 FGT
TP5 RTFG
TP6 FGS
TP7 RSFG
TP8 VS
TP9 TEN
TP10 VST
TP11 Vss
TP12 TPHO
TP13 SPHO
TP14 PLN+
TP15 PLN-

RV101 FWD TORQUE
RV102 RVS TORQUE
RV103 BACK TENSION

SW201 END SENSOR CURRENT
SW202 END SENSOR GAIN

/Serial No. UC 20026 and higher
EK 50066 and higher

C-47
C-48

A B C D E F G H

DR-139

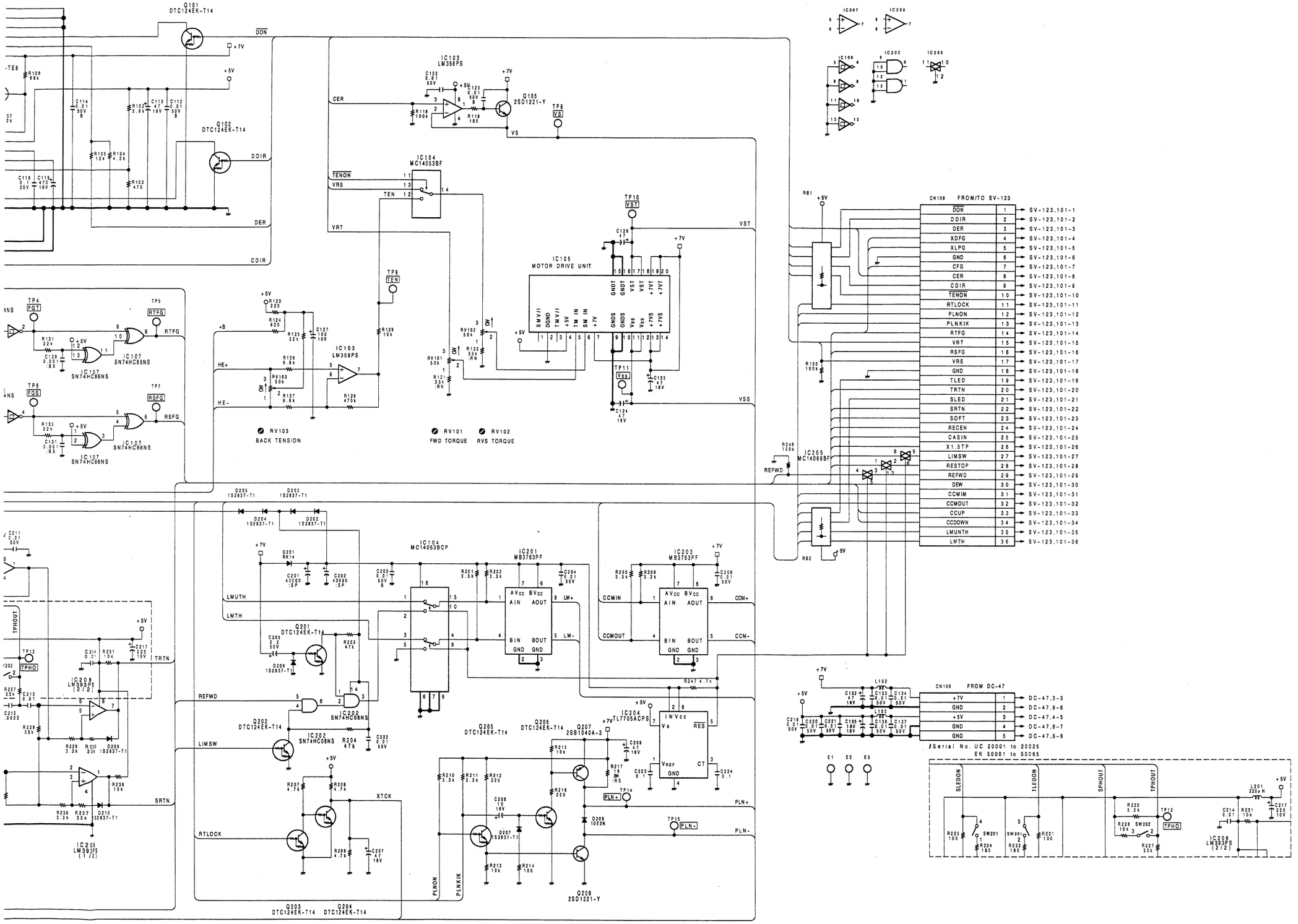

C-48

C-49

DR-139 BOARD

BOARD NO.1-637-285-11 & HIGHER
PCM-7050

HP-48 BOARD (PCM-7050)
Headphones

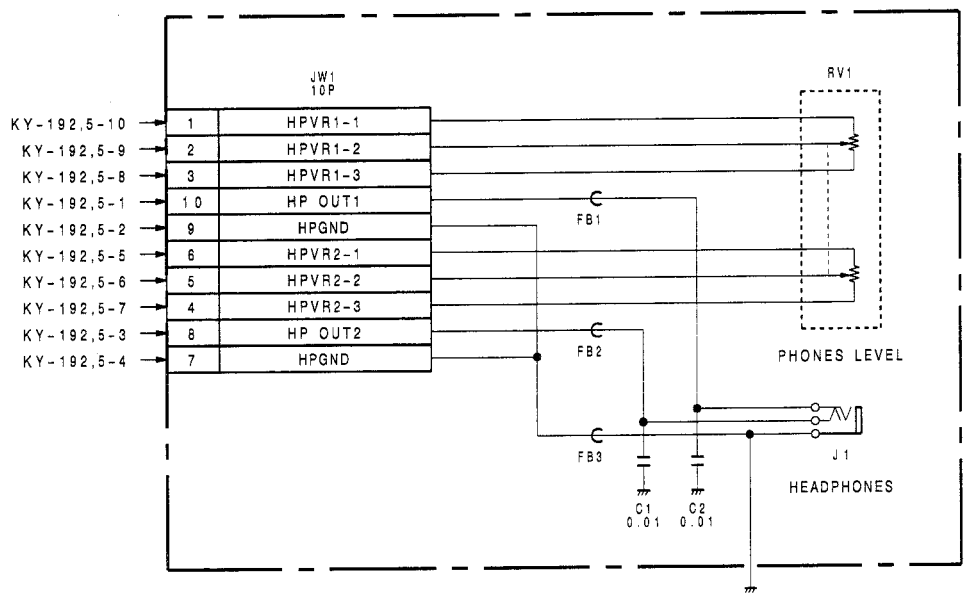

HP-48 BOARD

BOARD NO.1-637-283-12 & HIGHER
PCM-7050

A | B | C | D

KY-192 BOARD (PCM-7050)
Key,Display

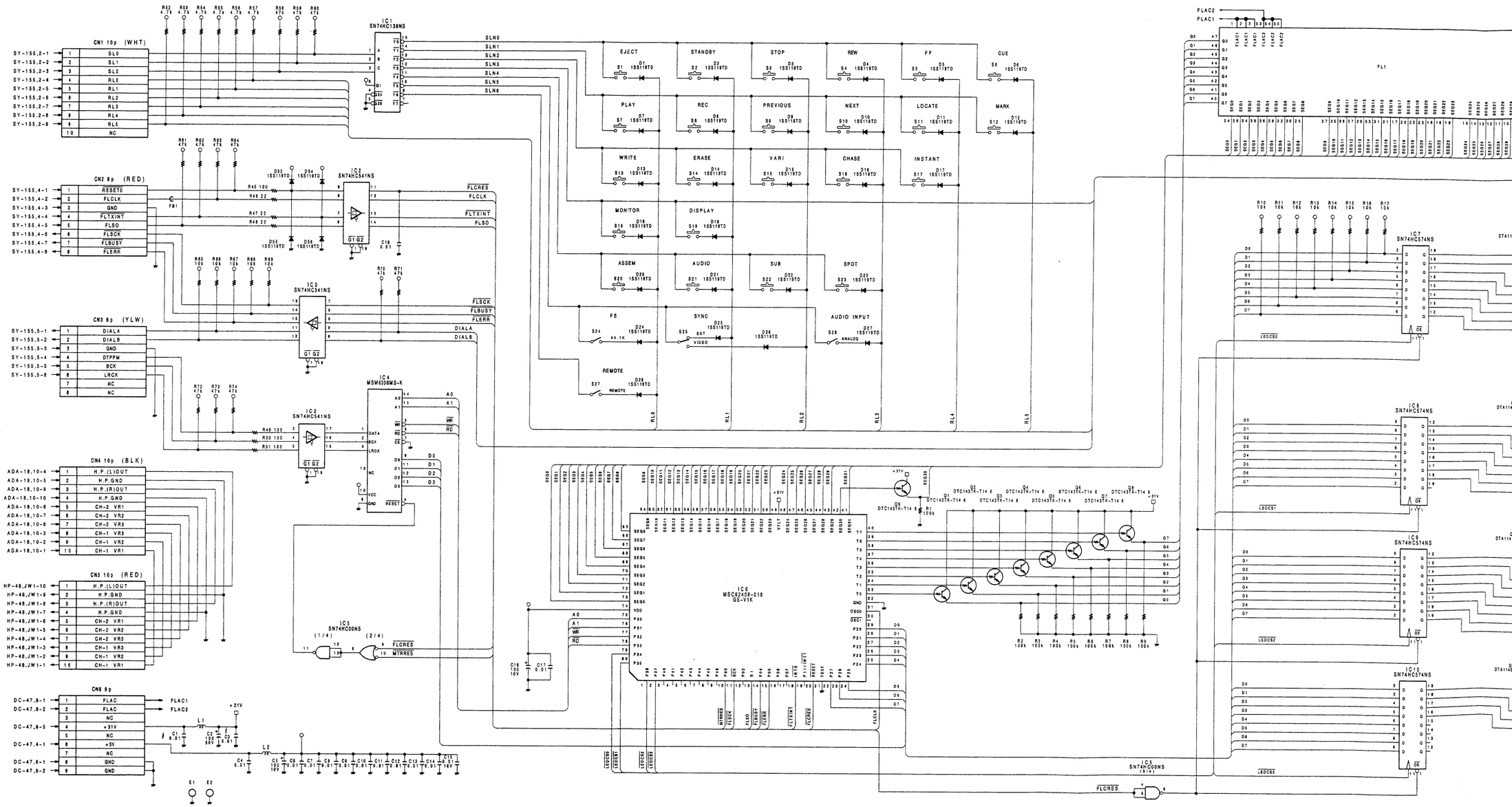

C-55

C-56

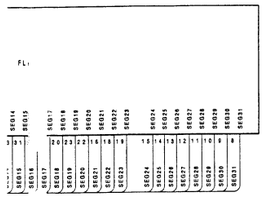

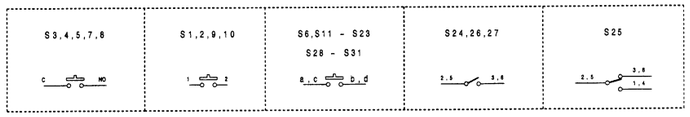

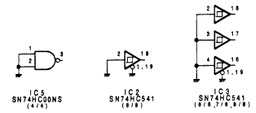

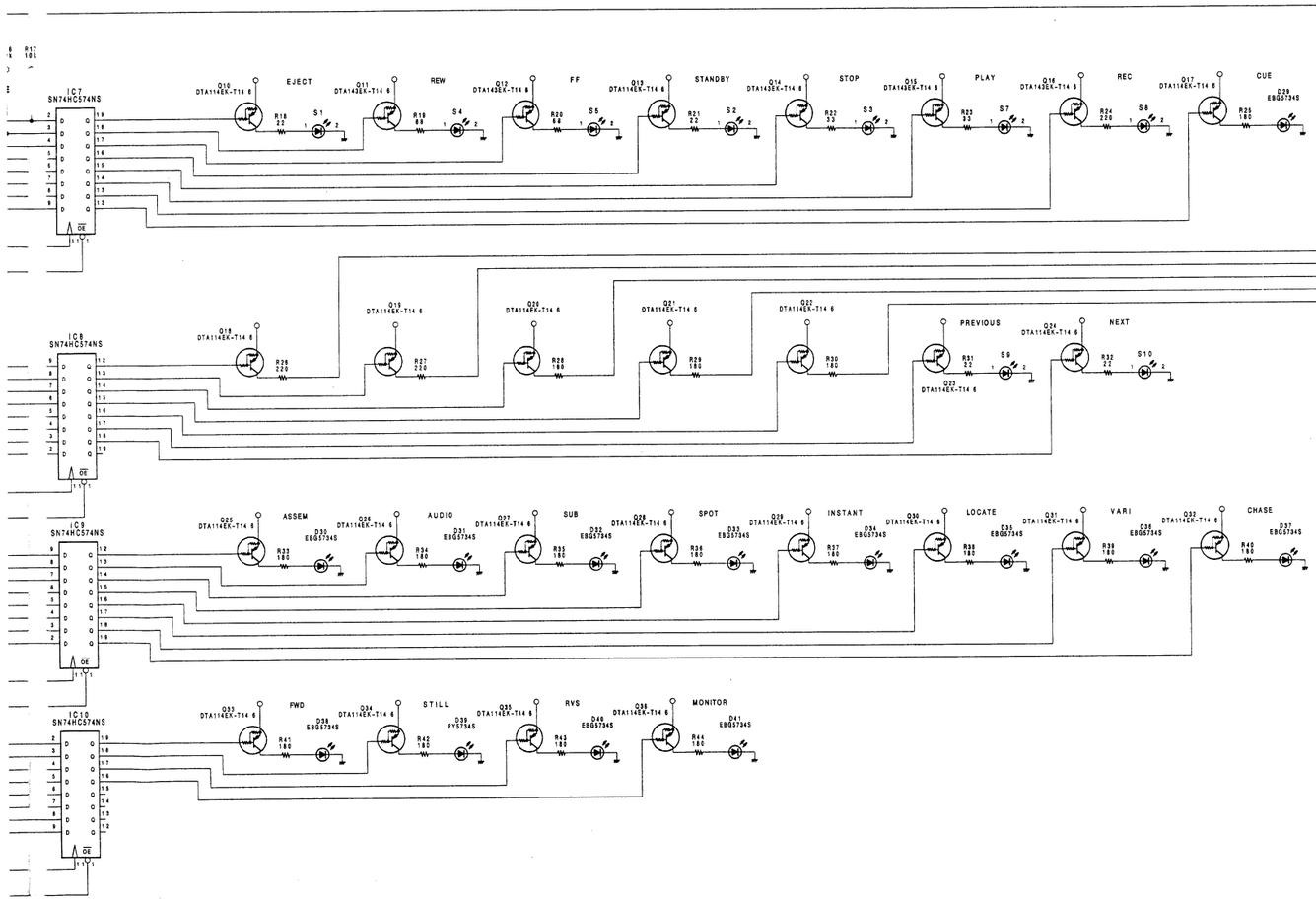

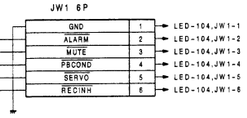

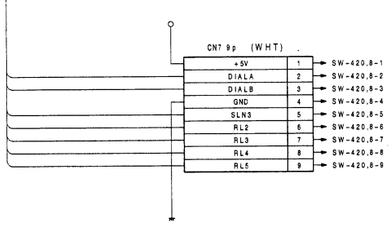

#:Changed Information

Applied Serial No.	Parts that have been deleted.
UC ;25116 and higher EK ;55121 and higher	C1,3

KY-192 BOARD

BOARD NO.1-637-268-11 & HIGHER
PCM-7050

LE-90A BOARD (PCM-7050)
LED

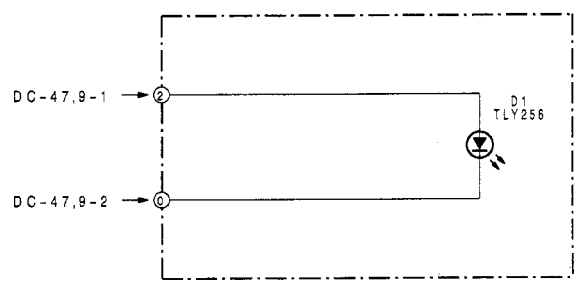

LE-90A BOARD
BOARD NO.1-637-285-12 & HIGHER
PCM-7050

LE-90B BOARD (PCM-7050)
LED

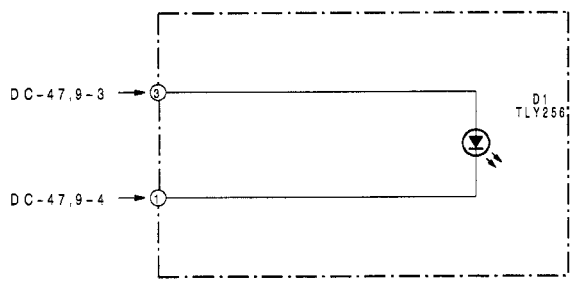

LE-90B BOARD
BOARD NO.1-637-286-12 & HIGHER
PCM-7050

LED-104 BOARD (PCM-7050)
LED(STATUS)

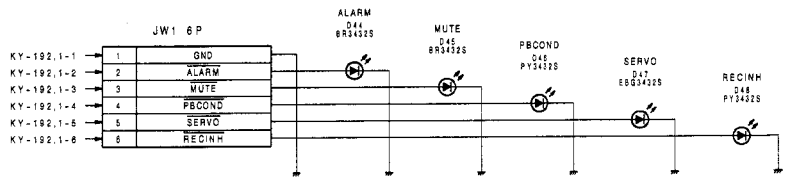

LED-104 BOARD

BOARD NO.1-637-269-11 & HIGHER
PCM-7050

A | B | C | D

MEM-40A BOARD (PCM-7050)

Memory Start

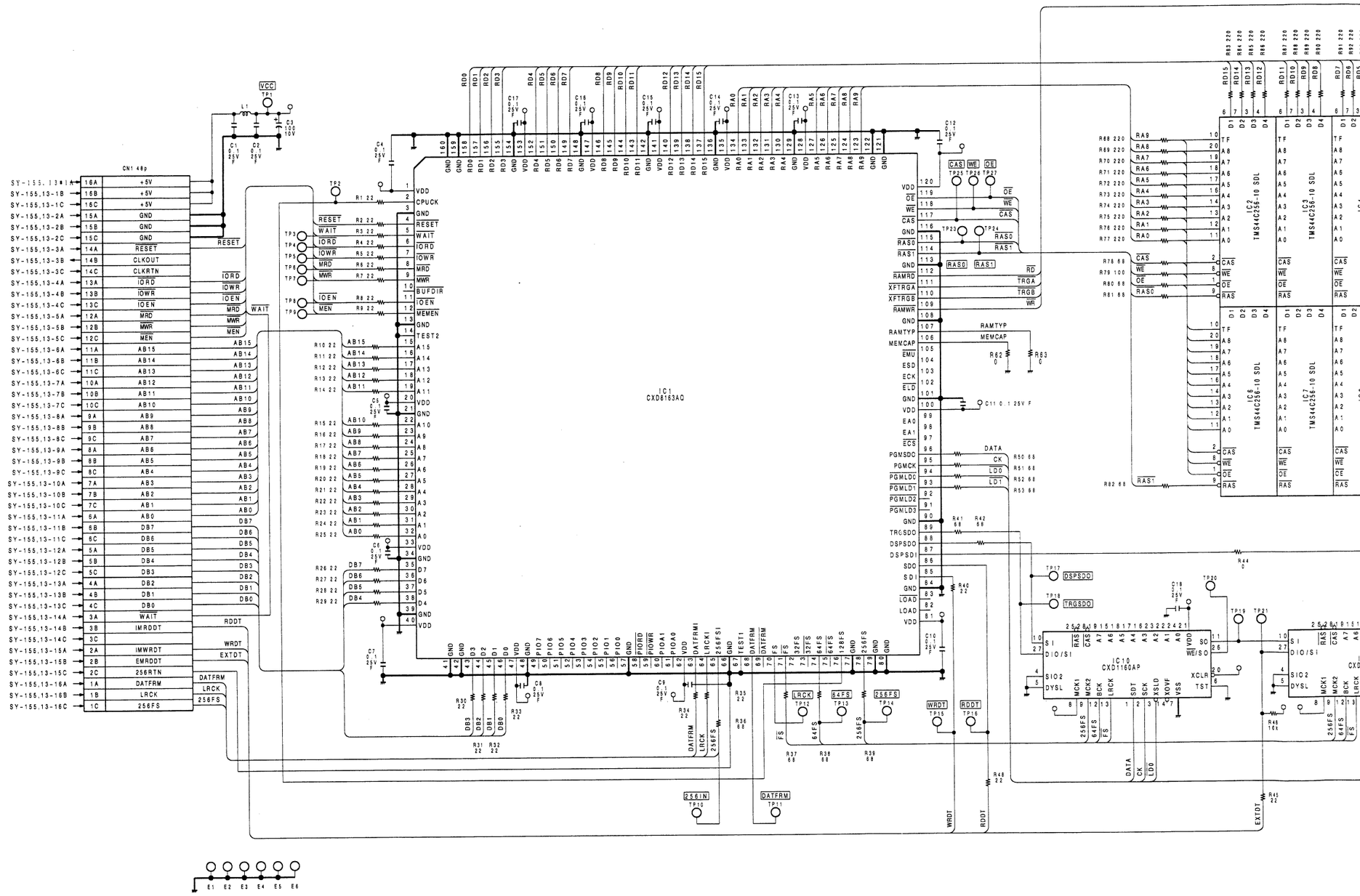

C-69 C-70

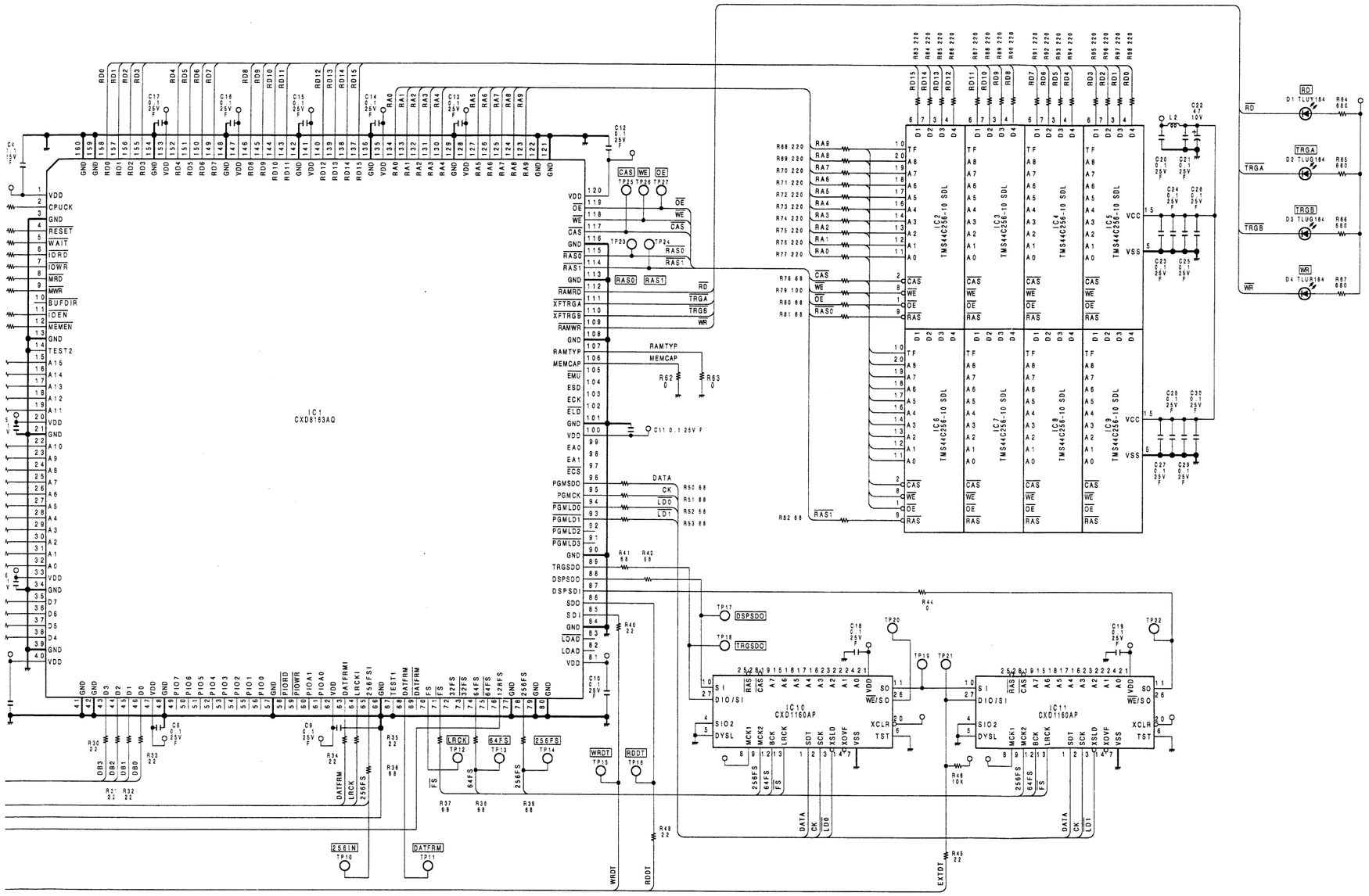

C-70

C-71

MEM-40A BOARD

BOARD NO.1-637-290-11 & HIGHER
PCM-7050

PS-211 BOARD (PCM-7050)
Power Supply

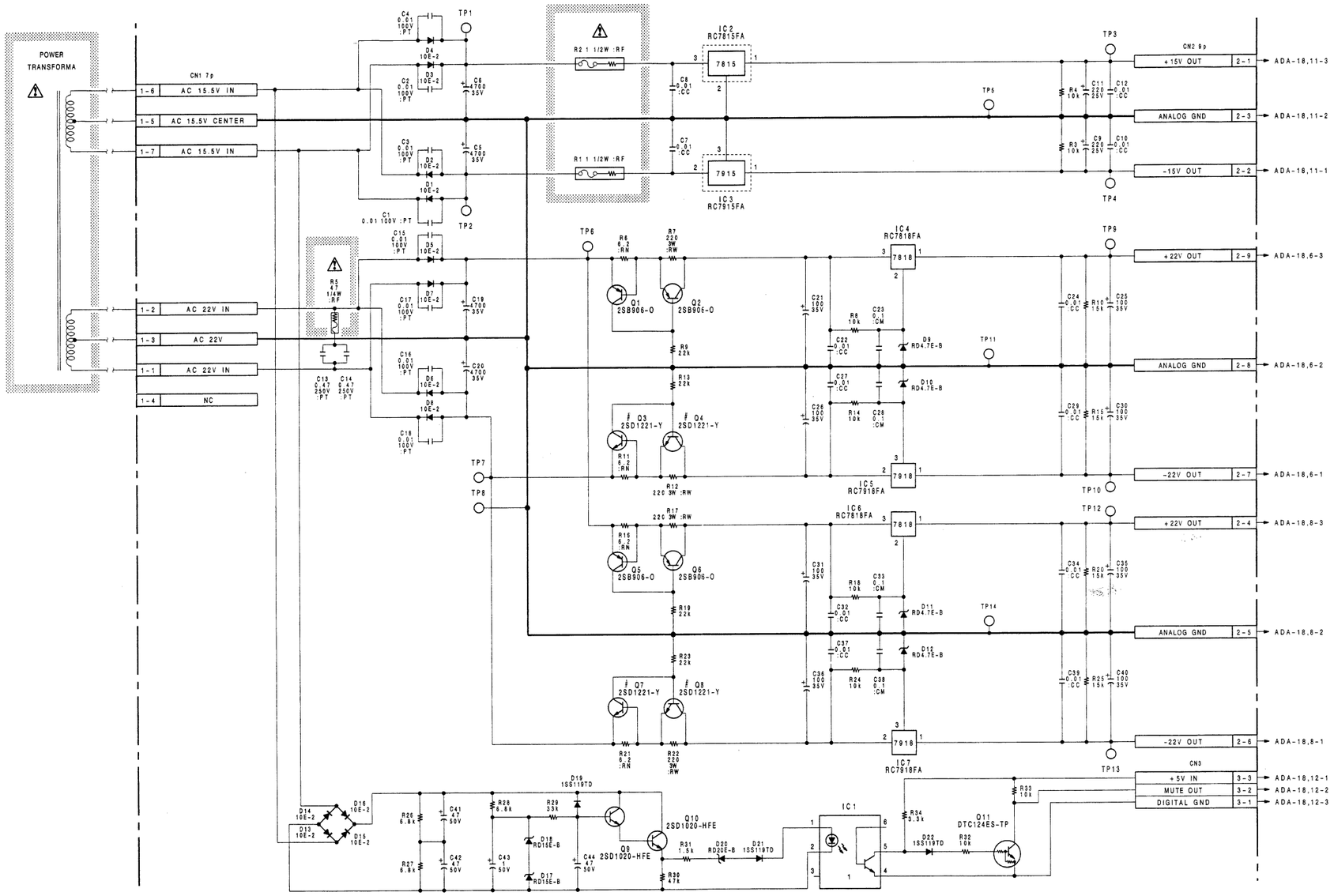

NOTE:

The shaded and ⚠ -marked components are critical to safety. Replace only with same components as specified.

#:Changed Information

Applied Serial No.	Parts that have been changed.
UC ;30001 and higher	Q3,4,7,8
EK ;55121 and higher	2SD1221-O ⟶ 2SD1221-Y

PS-211 BOARD

BOARD NO.1-637-273-11 & HIGHER
PCM-7050

RF-31 BOARD (PCM-7050)
RF Amplifier

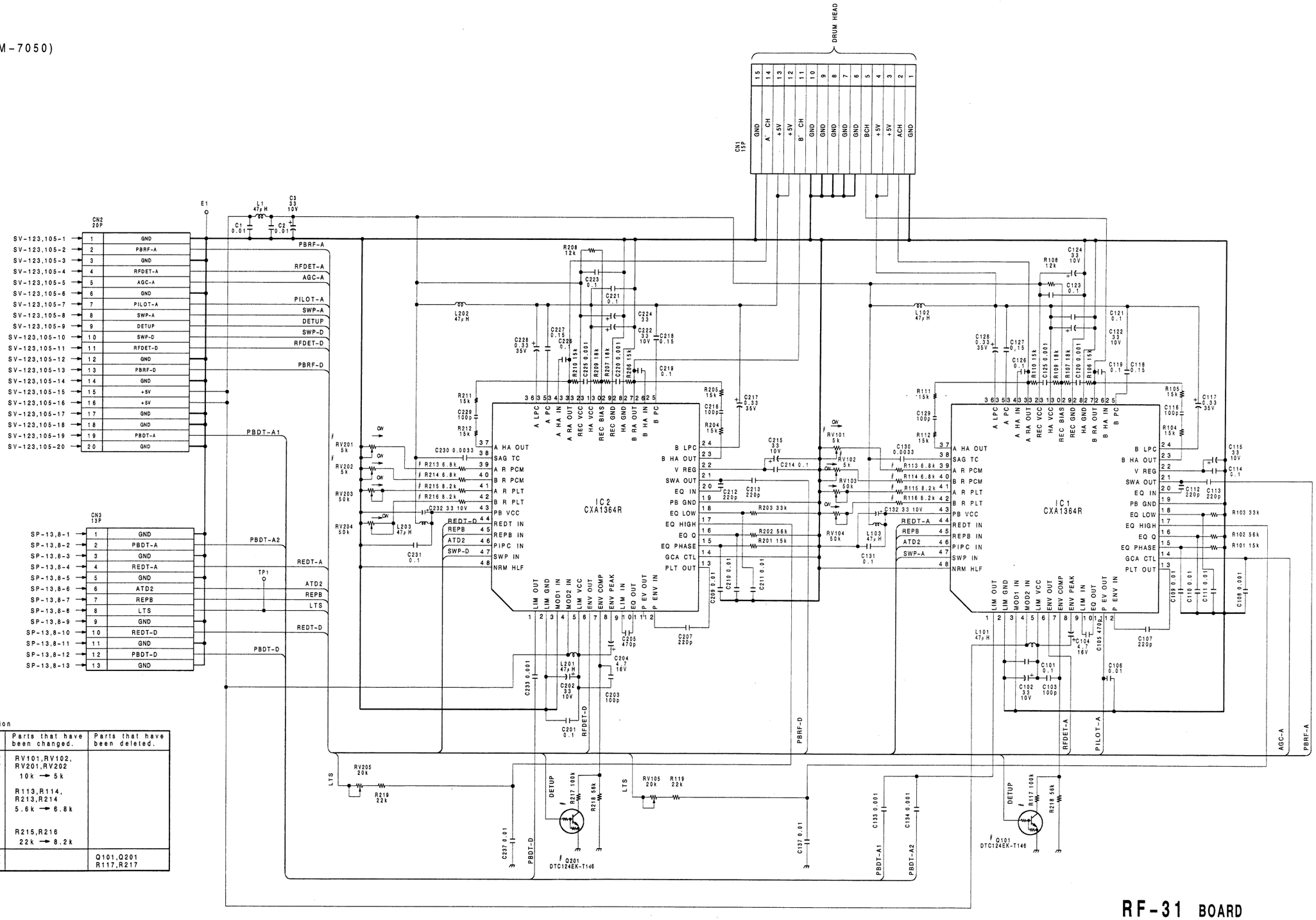

:Changed Information

Applied Serial No.	Parts that have been changed.	Parts that have been deleted.
UC;20001 and higher EK;50001 and higher	RV101,RV102, RV201,RV202 10k → 5k R113,R114, R213,R214 5.6k → 6.8k R215,R216 22k → 8.2k	
UC;20056 and higher EK;50176 and higher		Q101,Q201 R117,R217

RF-31 BOARD
BOARD NO.1-637-271-11 & HIGHER
PCM-7050

RM-77 BOARD (PCM-7050)
Parallel Remote

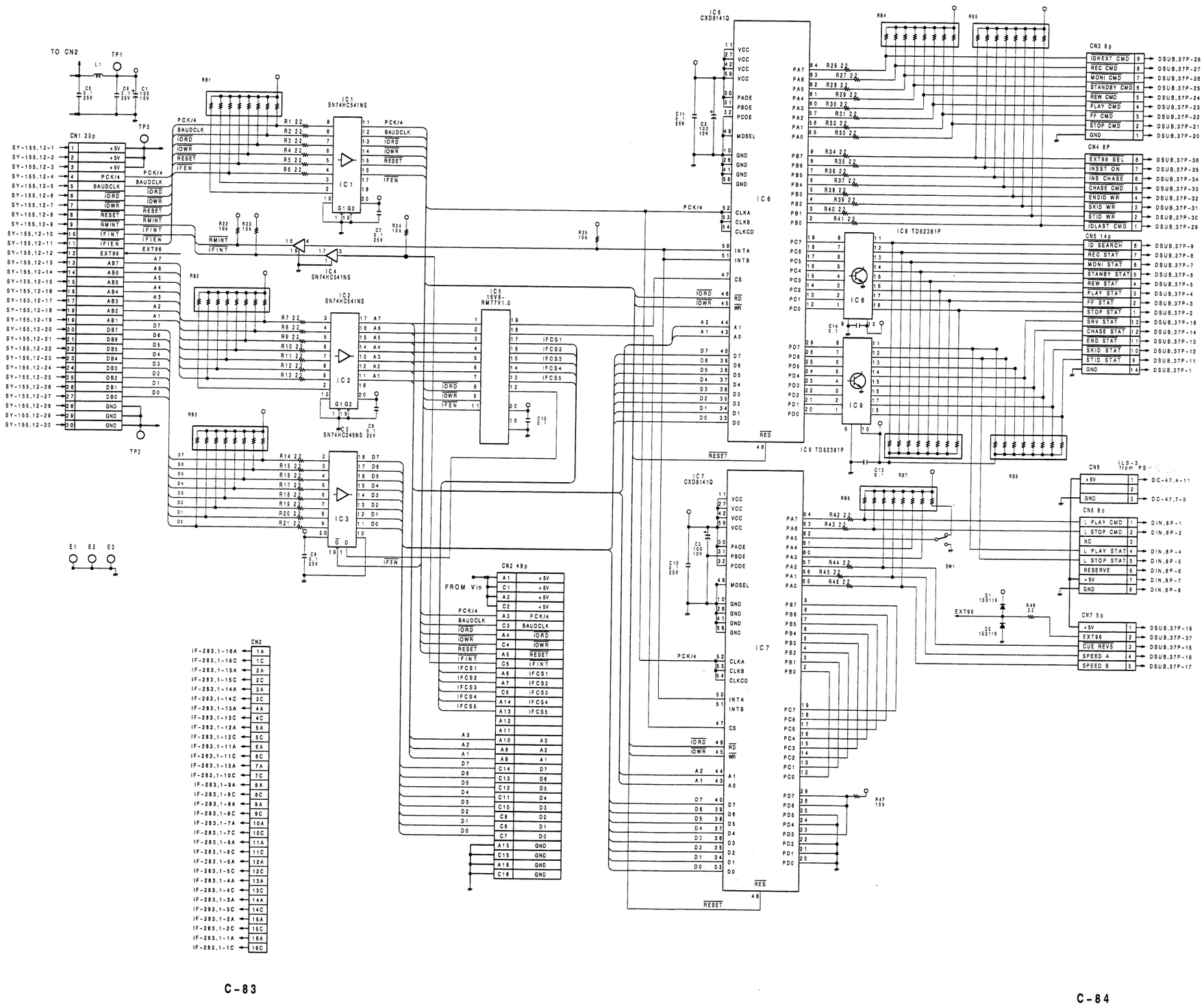

C-83

C-84

RM-77 BOARD

BOARD NO.1-637-272-11 & HIGHER
PCM-7050

SP-13 BOARD (PCM-7050)
Signal Processor

Serial No. UC 20001 to 20025
EK 50001 to 50065

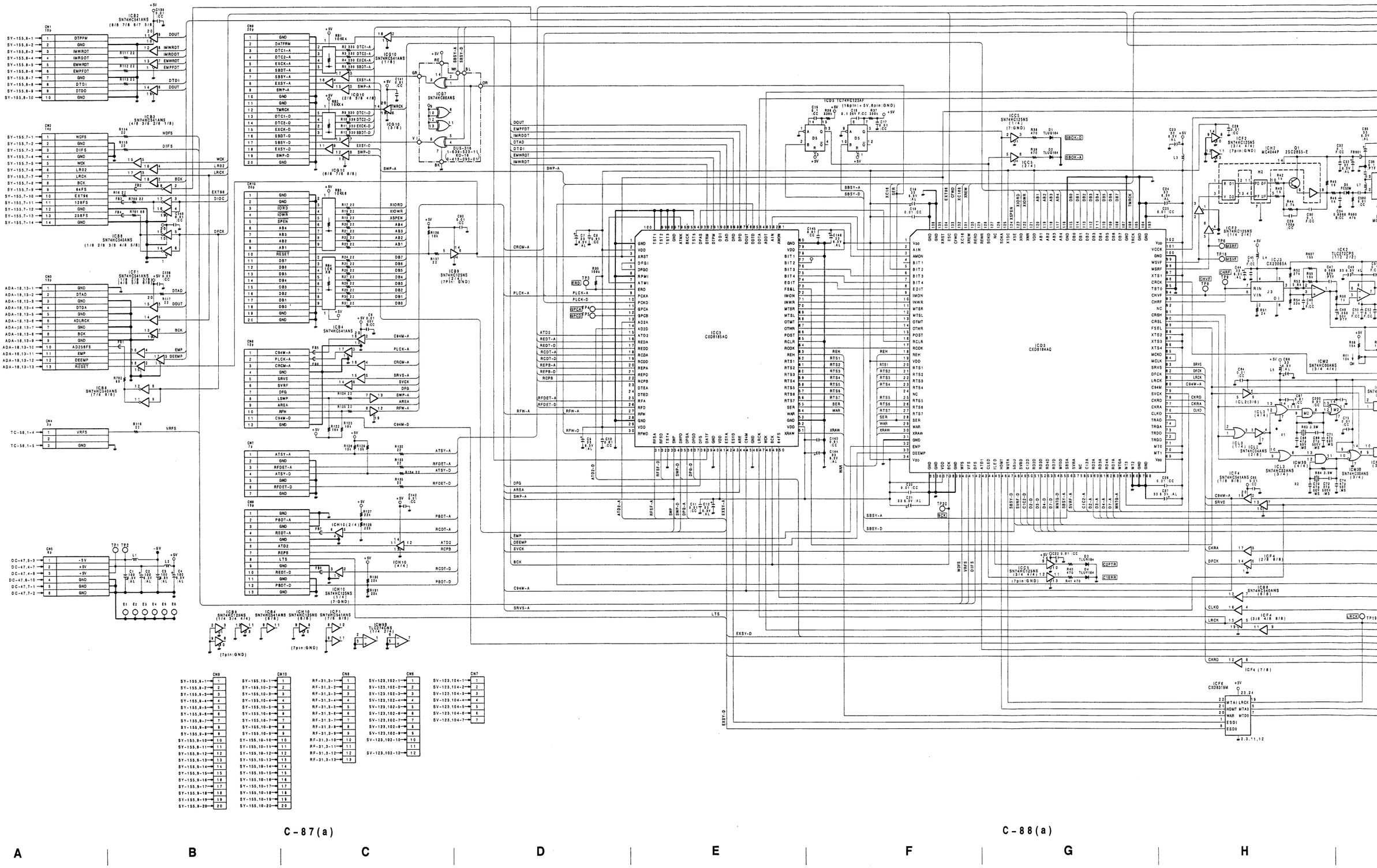

C-87(a)

C-88(a)

A B C D E F G H

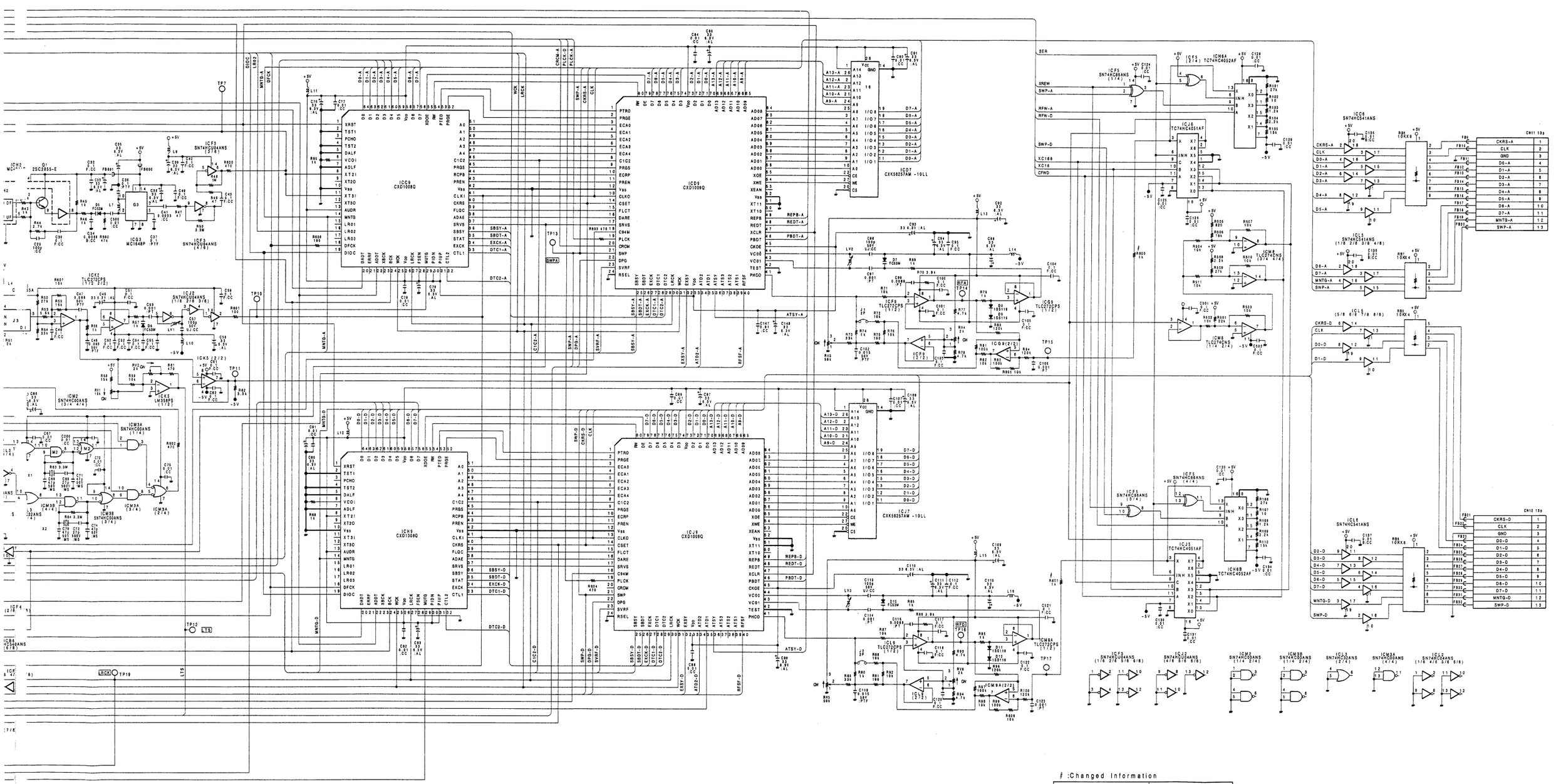

Applied Serial No.	Parts that have been added.
UC 20016 and higher EK 50036 and higher	R800 R801

SP-13 BOARD

BOARD NO.1-637-265-11
PCM-7050

C-89(a)

C-90(a)

SP-13 BOARD (PCM-7050)
Signal Processor

Serial No; UC 20026 to 20055
EK 50066 to 50175

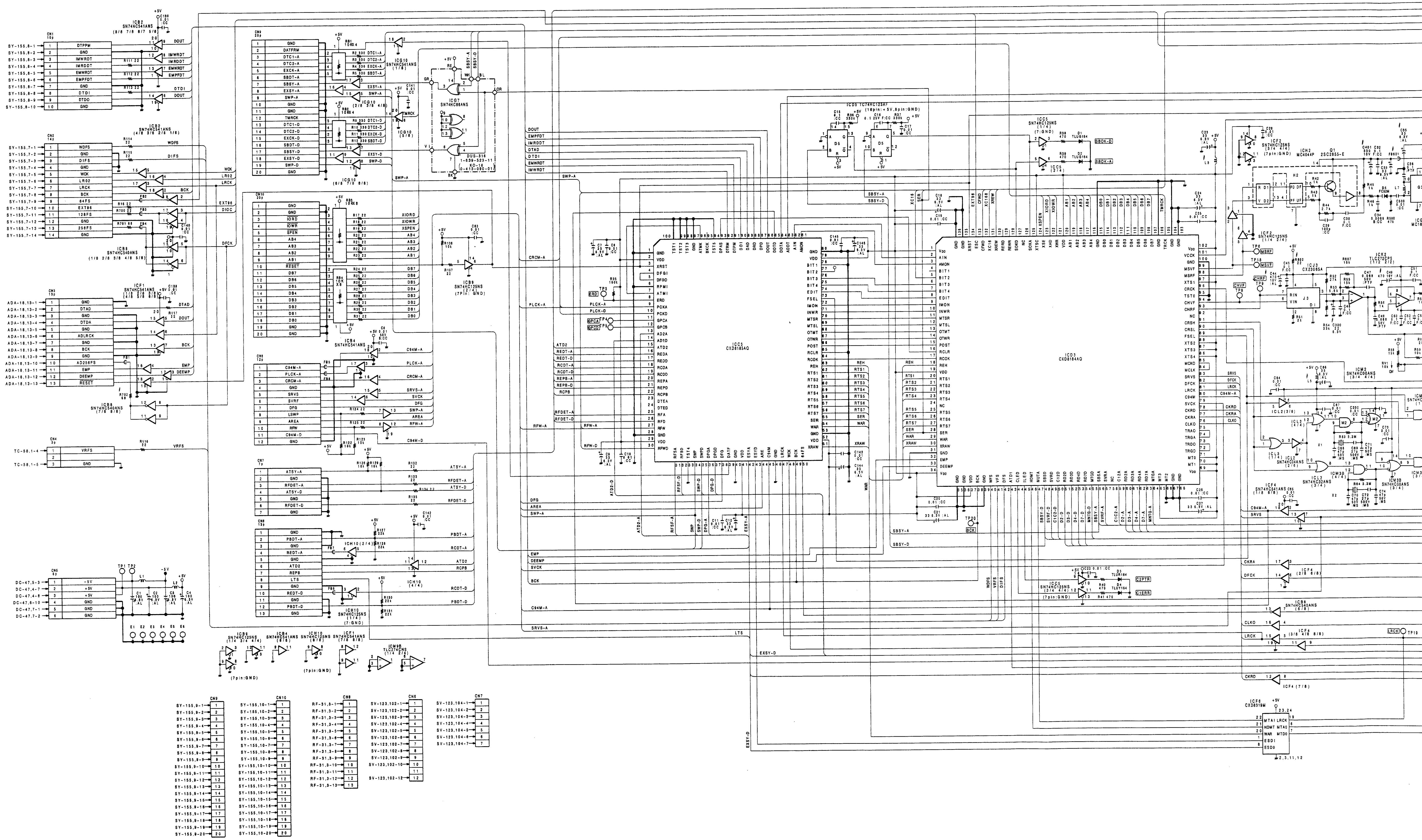

C-87(b)

C-88(b)

A | B | C | D | E | F | G | H

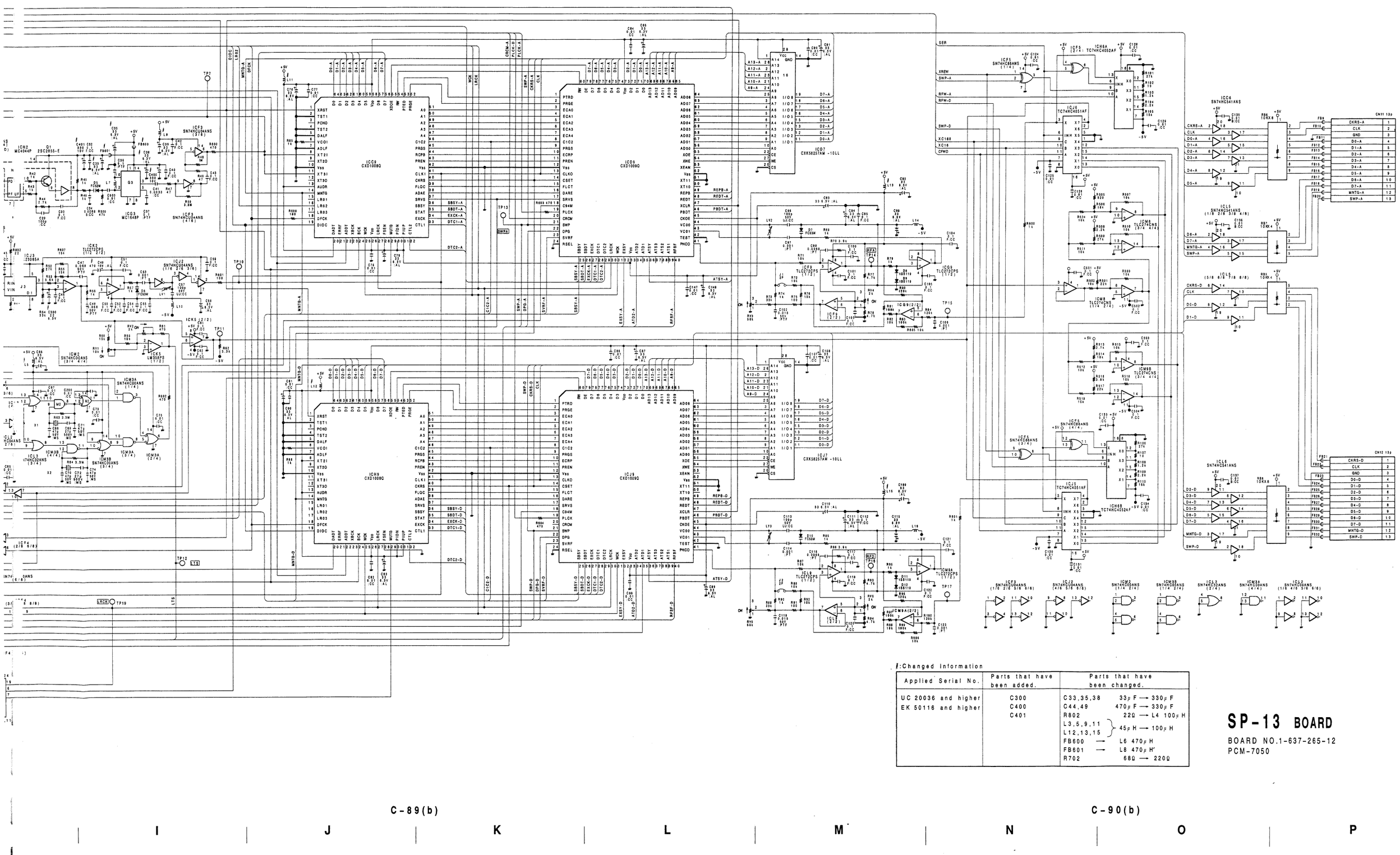

△:Changed Information

Applied Serial No.	Parts that have been added.	Parts that have been changed.
UC 20036 and higher EK 50116 and higher	C300 C400 C401	C33,35,38 33μF ⟶ 330μF C44,49 470μF ⟶ 330μF R802 22Ω ⟶ L4 100μH L3,5,9,11 / L12,13,15 45μH ⟶ 100μH FB600 ⟶ L6 470μH FB601 ⟶ L8 470μH' R702 68Ω ⟶ 220Ω

SP-13 BOARD

BOARD NO.1-637-265-12
PCM-7050

C-89(b) C-90(b)

I J K L M N O P

SP-13 BOARD (PCM-7050)
Signal Processor

Serial No. UC 20056 to 25010
EK 50176 to 55110

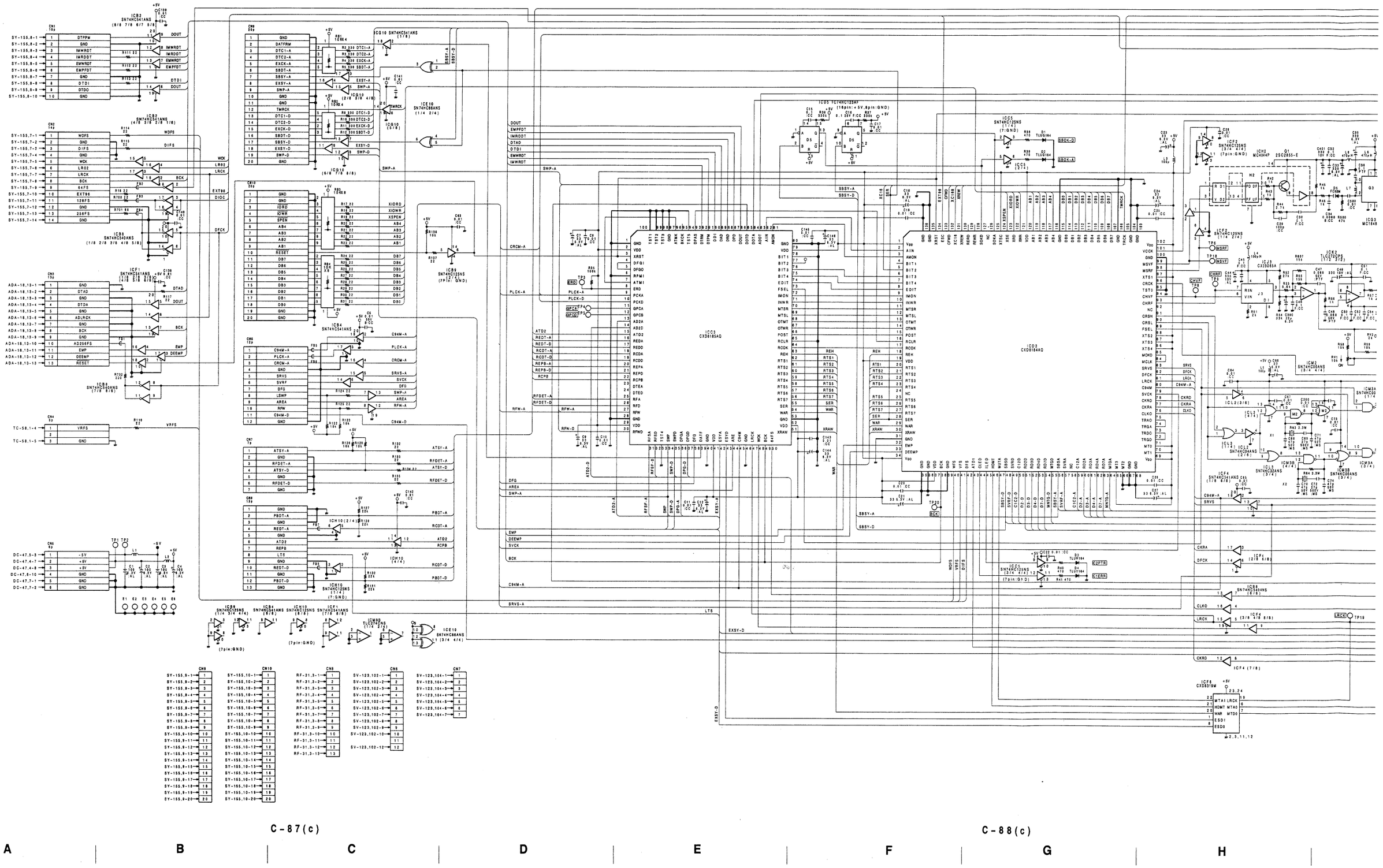
ICB2 SN74HC541ANS (8/8 7/8 6/7 5/8)
ICB1 SN74HC541ANS (1/8 2/8 3/8 4/8)
ICB8 SN74HC540ANS (1/8 2/8 3/8 4/8 5/8)
ICB4 SN74HC541ANS (2/8 3/8 4/8 5/8)
ICB9 SN74HC541ANS (7/8 8/8)
ICG10 SN74HC541ANS (1/8)
ICB10 (6/8 7/8 8/8)
ICH10 (2/4 3/4 4/4)
ICH10 (1/4 2/4)
ICH10 (4/4)
ICH10 SN74HC125NS (1/4 3/4)
ICB6 SN74HC125NS (1/4 3/4 4/4)
ICB5 SN74HC125NS (2/4 4/4)
ICH10 SN74HC125NS (2/4)
ICB9 TLC274CNS (1/4 2/4)
ICE10 SN74HC86ANS (1/4 2/4)
ICE10 SN74HC86ANS (3/4 4/4)
ICC5 TC74HC123AF (1pin:+5V,8pin:GND)
ICC5 SN74HC125NS (1/4)
ICC5 SN74HC125NS (7:GND)
ICC5 SN74HC125NS (3/4 4/4)
ICC3 CXD8185AQ
ICC3 CXD8184AQ
ICH2 MC4044P
Q1 2SC2855-E
ICF2 SN74HC125NS (3/4 4/4)
ICF2 SN74HC125NS (7:GND)
ICH3 MC1648
ICF3 MC1648
ICH3 SN74HC02ANS (3/4 4/4)
ICH3 SN74HC02ANS (1/4)
ICH3 SN74HC02ANS (2/4)
ICM3A SN74HC02
ICM3B SN74HC02ANS (4/4)
ICM3B SN74HC02ANS (3/4)
ICF4 SN74HC541ANS (1/8 8/8)
ICF4 (2/8 6/8)
ICF4 (3/8 4/8 5/8)
ICF4 (7/8)
ICF2 TLC272CPS (1/2 2/2)
ICJ3 CX20085A
ICM2 SN74HC02ANS (3/4 4/4)
ICL2 (3/8)
ICL3 (1/4)
ICL3 (3/4)
ICL2 SN74HC04ANS (2/6)
ICF6 CXD5319M
CN1 19p
CN2 14p
CN3 13p
CN4 3p
CN5 8p
CN6 6p
CN7 7p
CN8 20p
CN9 20p
CN10 20p
CN11 20p
CN12 13p
CN6
CN8
CN10
CN9
CN6
CN7
DOUT
EMPFDT
IMRRDT
DTAD
DTDI
EMWRDT
IMWRDT
SBSY-A
SBSY-D
SWP-A
SWP-D
EXSY-A
EXSY-D
SBDK-D
SBDK-A
WDFS
DIFS
WCK
LRCK
BCK
64FS
EXT96
DIOC
DFCK
DTAD
DOUT
BCK
DEEMP
EMP
ADLRCK
AD256FS
RESET
VRFS
-5V
+5V
GND
XIORD
XIOWR
XSPEN
AB4
AB3
AB2
AB1
RESET
DB7
DB6
DB5
DB4
DB3
DB2
DB1
DB0
CRCM-A
PLCK-A
SRVS-A
SVCK
SWP-A
AREA
RFW-A
C94M-A
C94M-D
ATSY-A
RFDET-A
ATSY-D
RFDET-D
PBDT-A
RCDT-A
ATD2
RCPB
RCDT-D
PBDT-D
CRCM-A
PLCK-A
DFG
AREA
SWP-A
EMP
DEEMP
SVCK
BCK
C94M-A
SRVS-A
LTS
EXSY-D
ATD2-A
ATD2-D
RFSF-A
RFSF-D
SWP
SWP-D
DFG-A
DFG-D
SBSY-A
SBSY-D
WAR
REH
RTS1
RTS2
RTS3
RTS4
RTS5
RTS6
RTS7
SER
XRAW
WDFS
VRFS
DIFS
XCK16
XPTR
CIERR
CKRA
DFCK
CKRD
CLKO
LRCK
LRCK
TP19
MSRF
MSVF
CHVF
CHRF
TP1
TP2
L1
L2
L3
L4
L5
L6
L7
L8
L9
L10
L11
L12
L13
L14
L15
L16
L17
L18
L19
L20
L21
L22
L23
L24
L25
L26
L27
L28
L29
L30
L31
L32
L33
L34
L35
L36
L37
L38
L39
L40

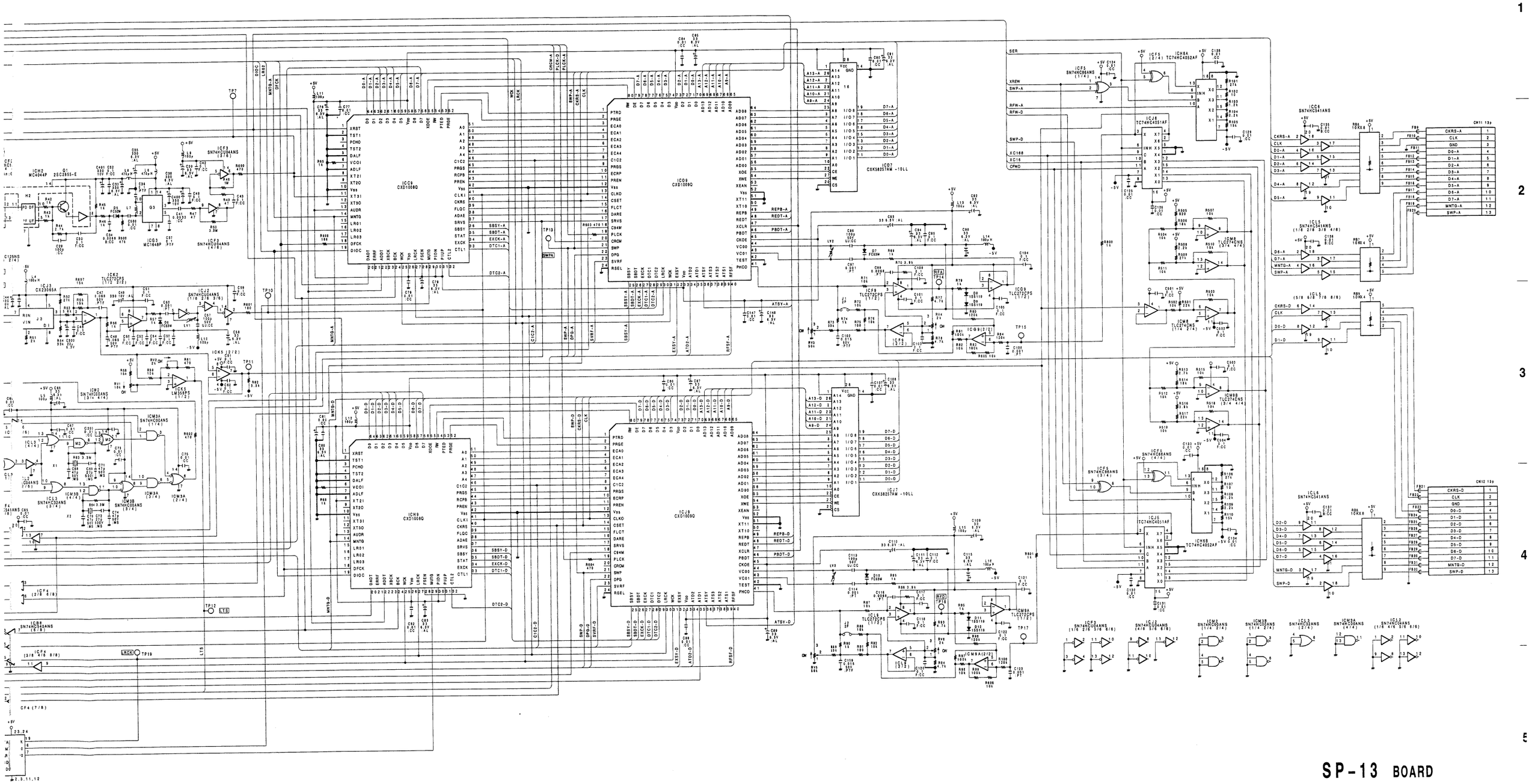

SP-13 BOARD

BOARD NO.1-637-265-13
PCM-7050

C-89(c)

C-90(c)

SP-13 BOARD (PCM-7050)

Signal Processor

Serial No. UC 25011 to 25080

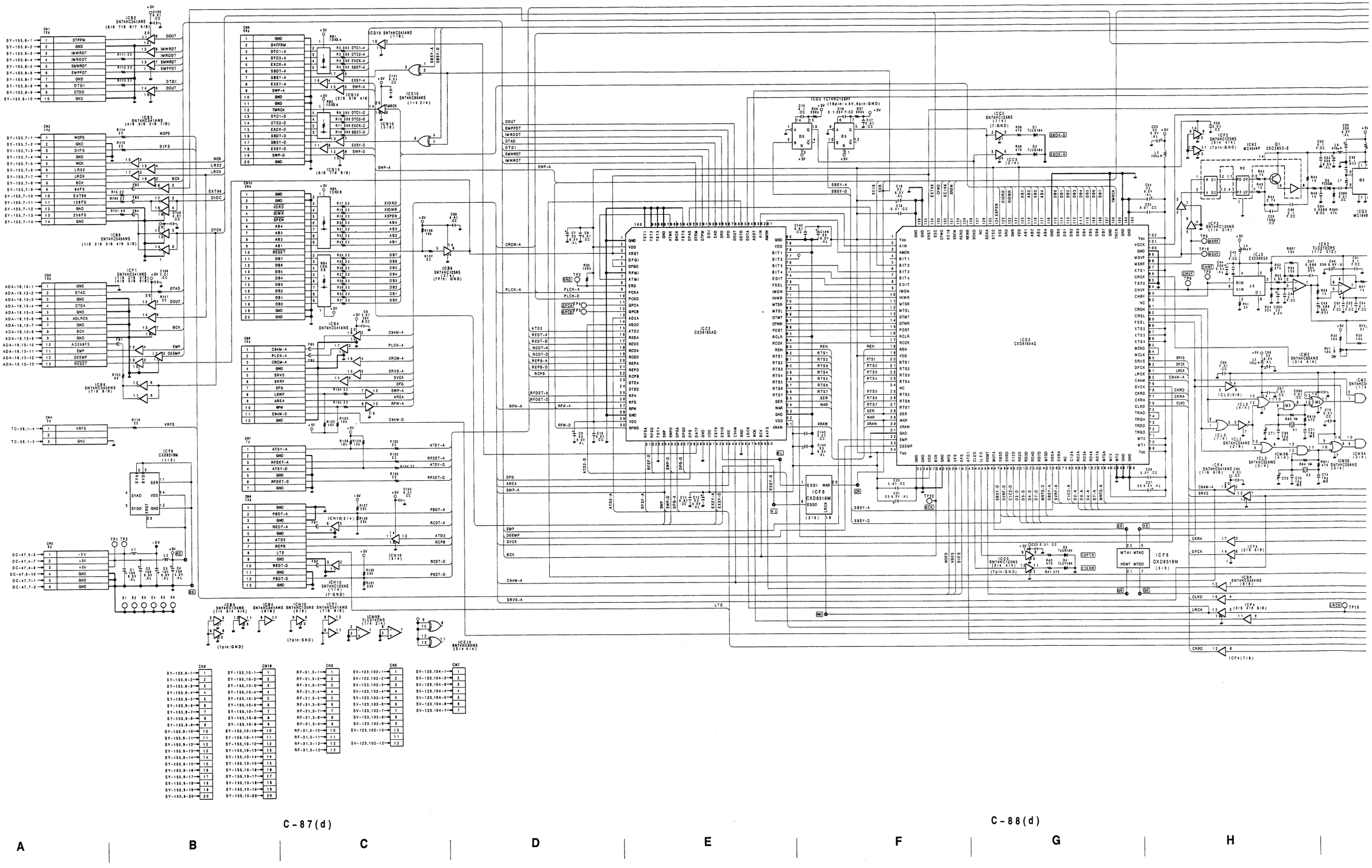

C-87(d)

C-88(d)

A B C D E F G H

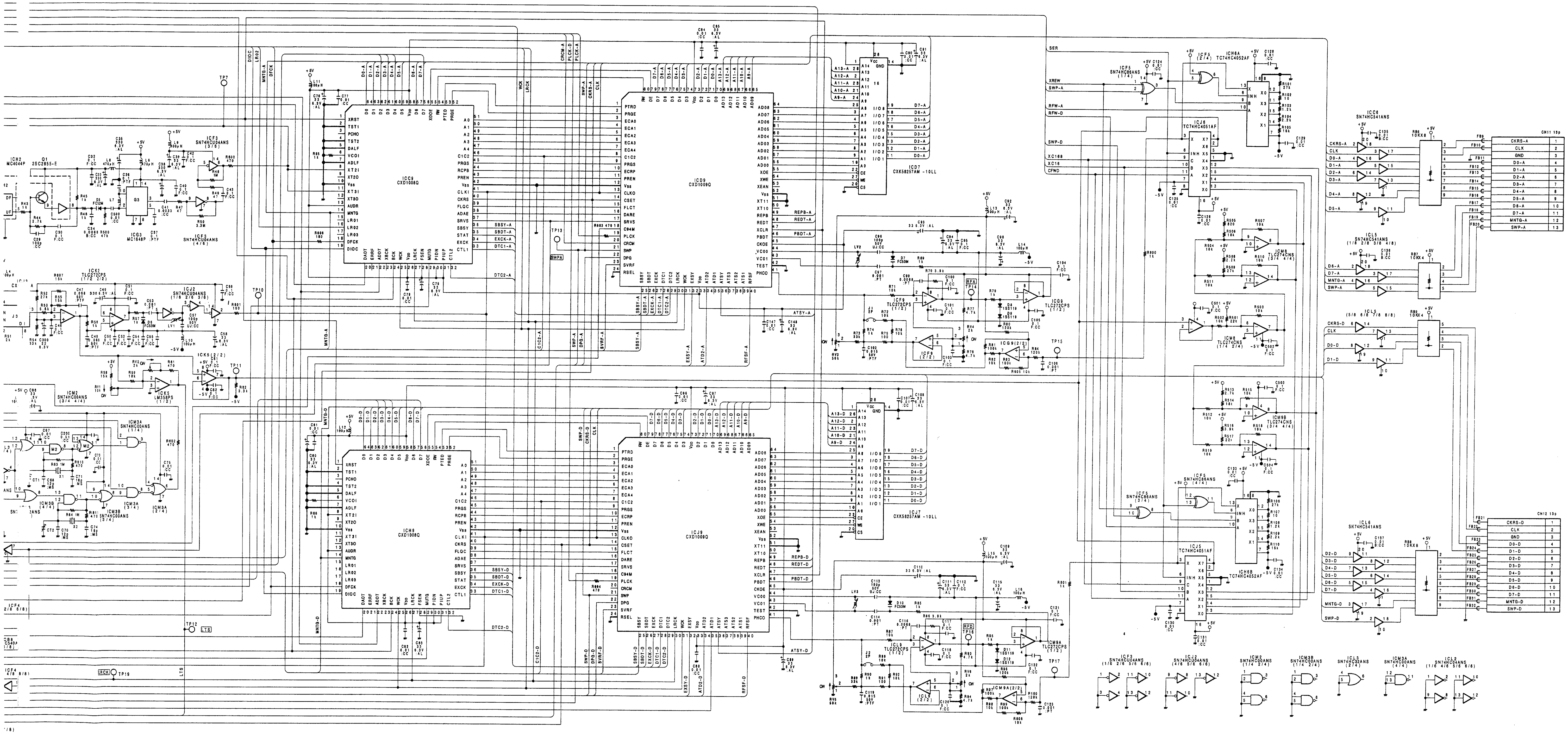

#:Changed Information

Applied Serial No.	Parts that have been changed.
UC;25041 and higher	R601 100 → 22

SP-13 BOARD

BOARD NO.1-637-265-14
PCM-7050

SP-13 BOARD (PCM-7050)
Signal Processor

Serial No. UC 25081 and higher
EK 55111 and higher

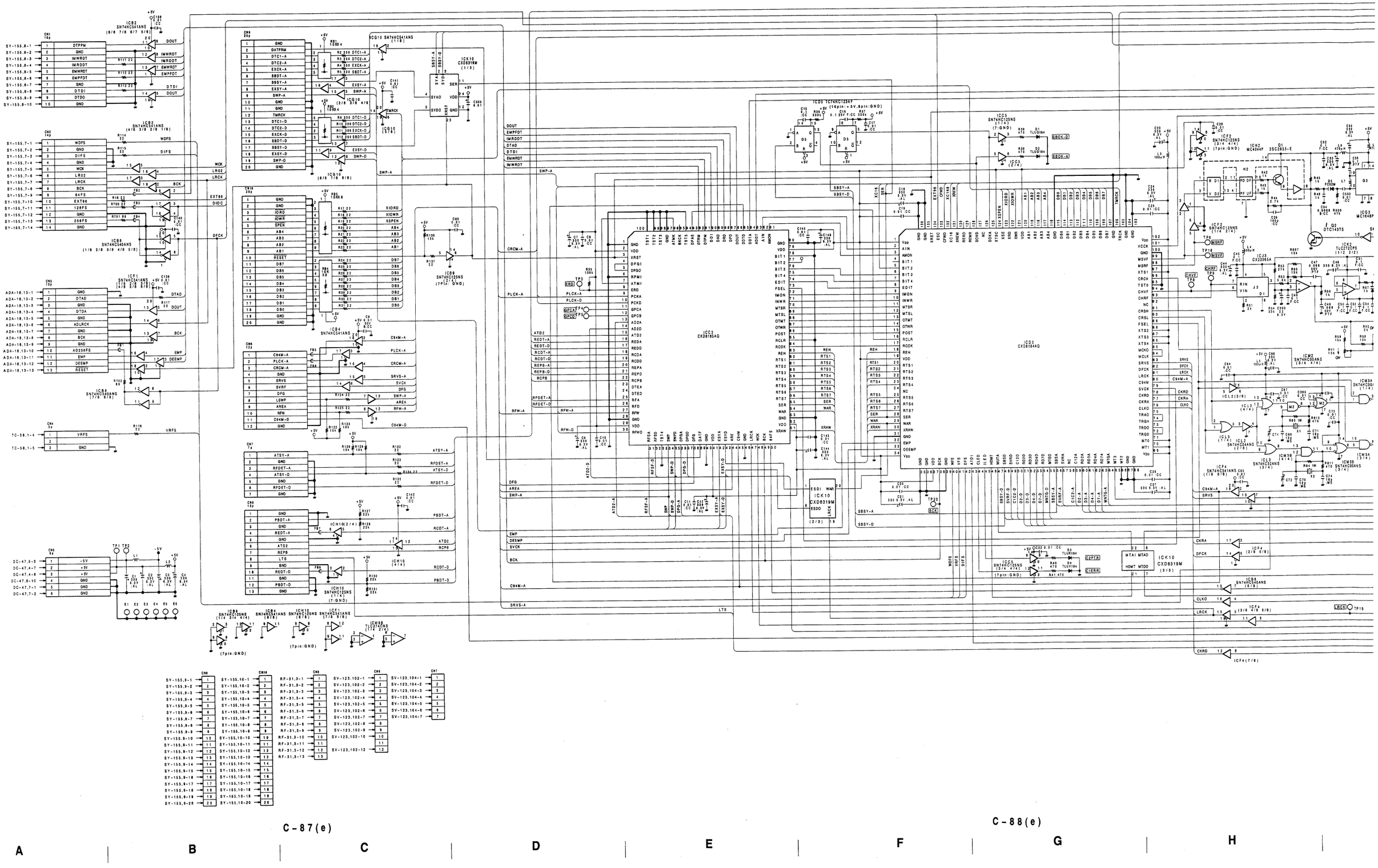

A | B | C | D | E | F | G | H

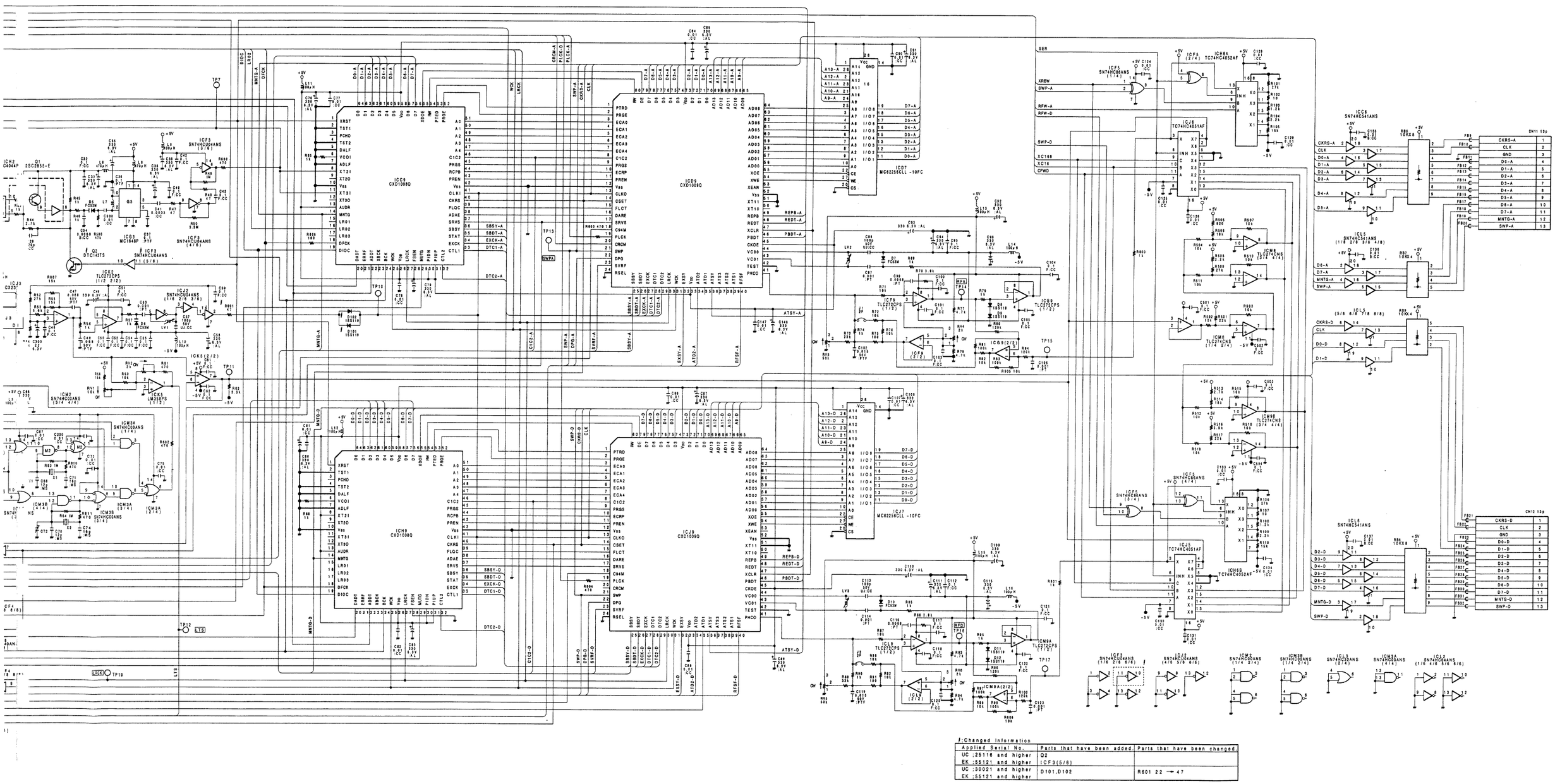

SP-13 BOARD

BOARD NO.1-637-265-15
PCM-7050

C-89(e) C-90(e)

I J K L M N O P

1 2 3 4 5

SP-17C BOARD (PCM-7050)
Signal Processor

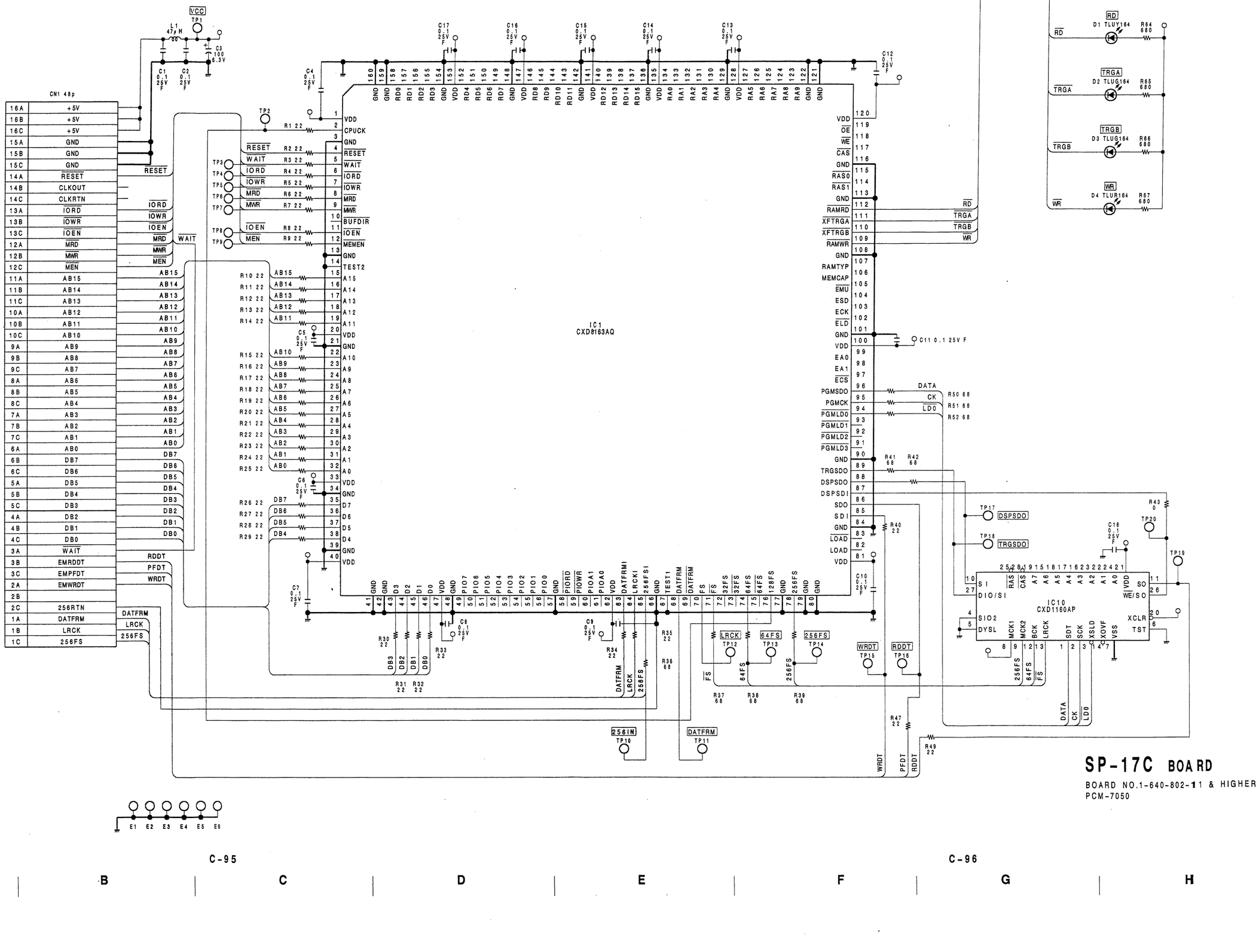

SP-17C BOARD

BOARD NO.1-640-802-11 & HIGHER
PCM-7050

C-95 C-96

A B C D E F G H

1 2 3 4 5

SV-123 BOARD (PCM-7050)
Servo

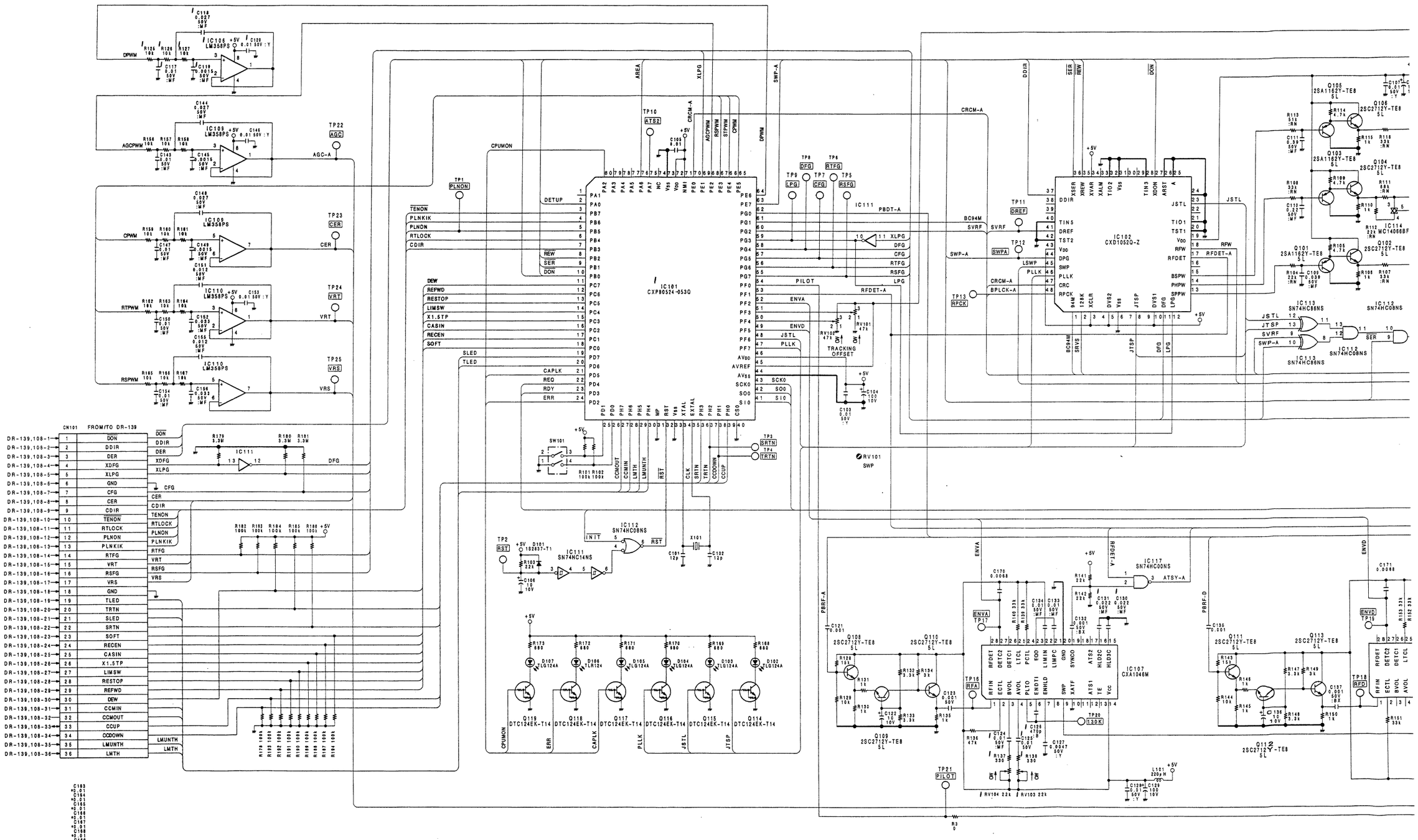

C-99 C-100

A | B | C | D | E | F | G | H

SV-123

SV-123 BOARD

BOARD NO.1-637-263-11 & HIGHER
PCM-7050

:Changed Information

Applied Serial No.	Parts that have been changed.	Parts that have been deleted.
UC;20016 and higher EK;50036 and higher	C130 C131	
UC;25081 and higher EK;55111 and higher		C117,118,119 C120,124,125,126 IC106 R125,126,127 R137,138 RV103,104
UC;25091 and higher EK;55111 and higher	IC101 CXP80524-027Q ↓ CXP80524-053Q	
UC;30021 and higher EK;55121 and higher	R174 22 ⟶ 100	

C-100

C-101

E | F | G | H | I | J | K | L

1 | 2 | 3 | 4 | 5

SW-420 BOARD (PCM-7050)
Switch(MENU)

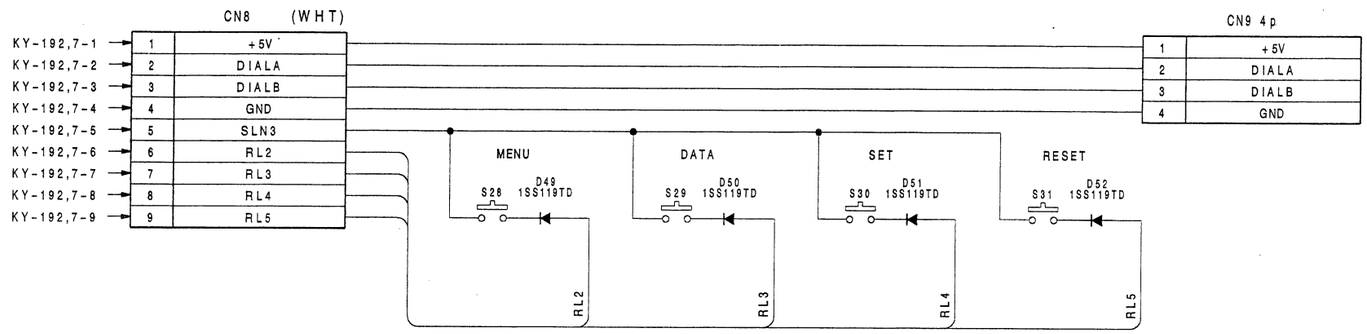

SW-420 BOARD
BOARD NO.1-637-270—11 & HIGHER
PCM-7050

C-105 C-106

A B C D E F G H

1 2 3 4 5

SW-426 BOARD (PCM-7050)
Switch(600Ω)

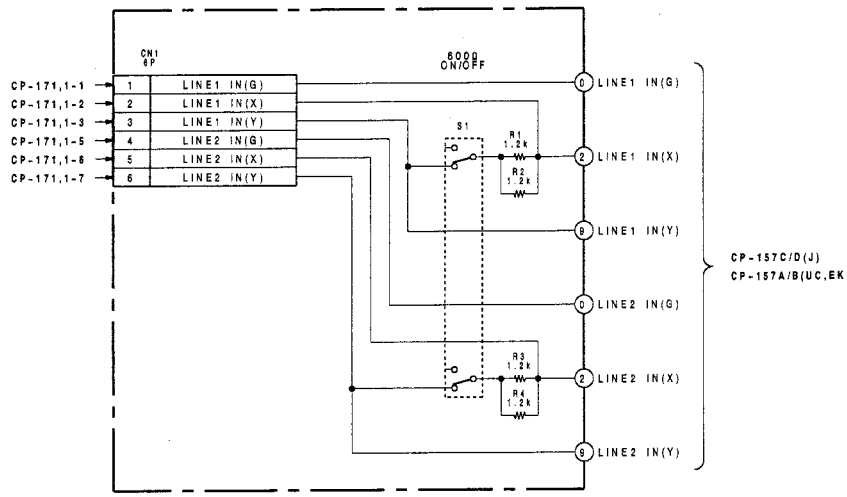

SW-426 BOARD
BOARD NO.1-637-279-11 & HIGHER
PCM-7050

SW-452 BOARD (PCM-7050)
Switch(CASSETTE)

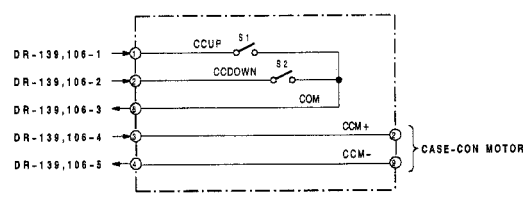

SW-452 BOARD
BOARD NO.1-637-287-11 & HIGHER
PCM-7050

A | B | C | D

SW-453 BOARD (PCM-7050)
Switch(75Ω)

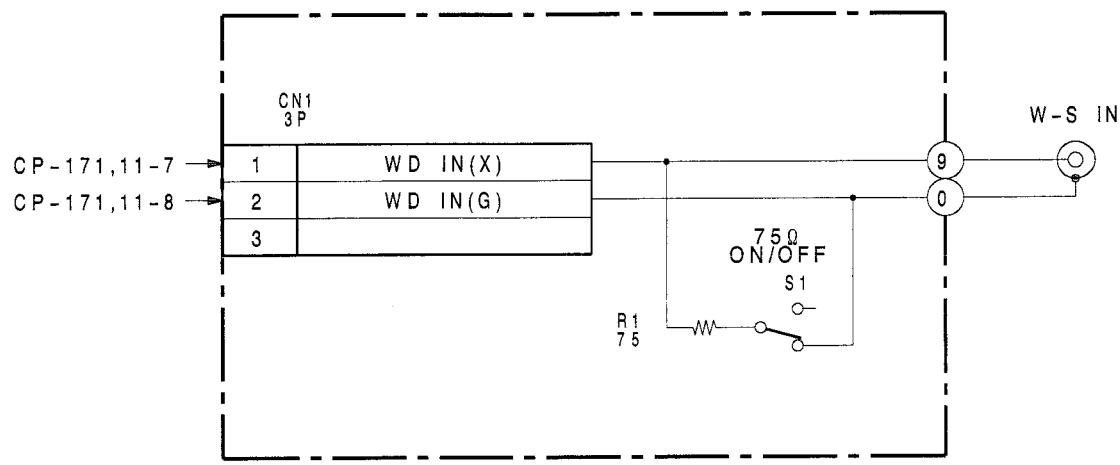

SW-453 BOARD
BOARD NO.1-637-293-11 & HIGHER
PCM-7050

A | B | C | D

SW-454 BOARD (PCM-7050)
Switch(EXT SYNC)

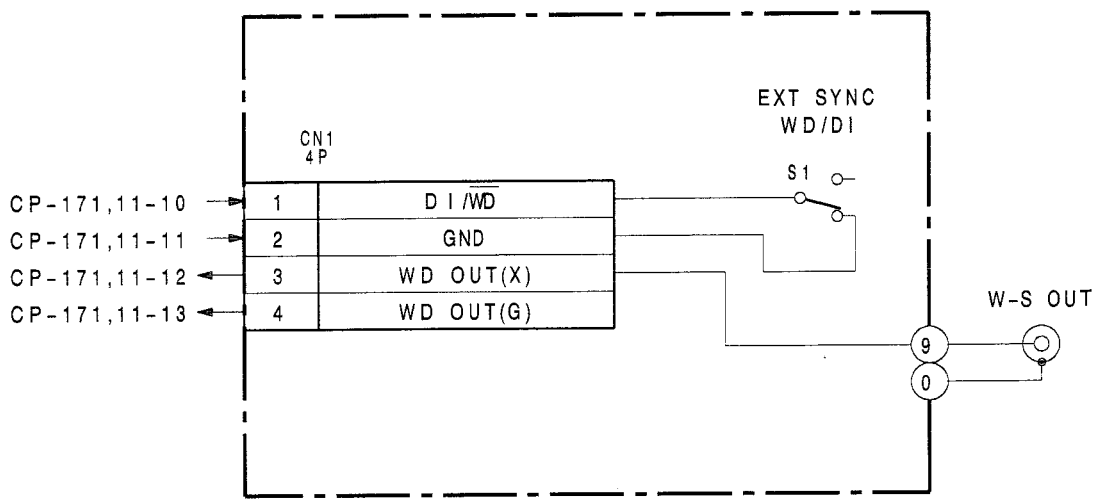

SW-454 BOARD
BOARD NO.1-637-294-11 & HIGHER
PCM-7050

A | B | C | D

SY-155A(1/2) BOARD (PCM-7050)
System Control

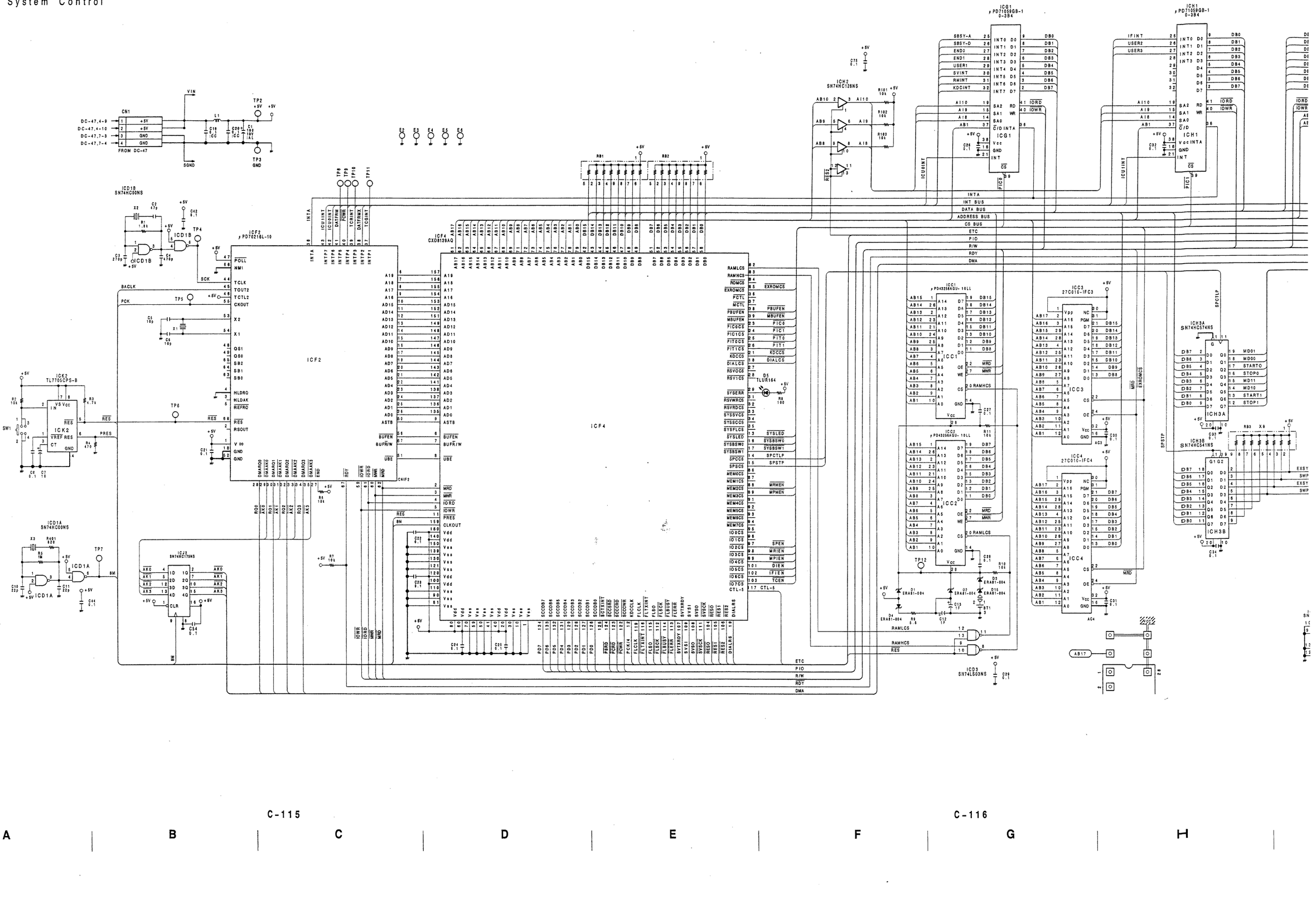

A | B | C | D | E | F | G | H

SY-155A(1/2)

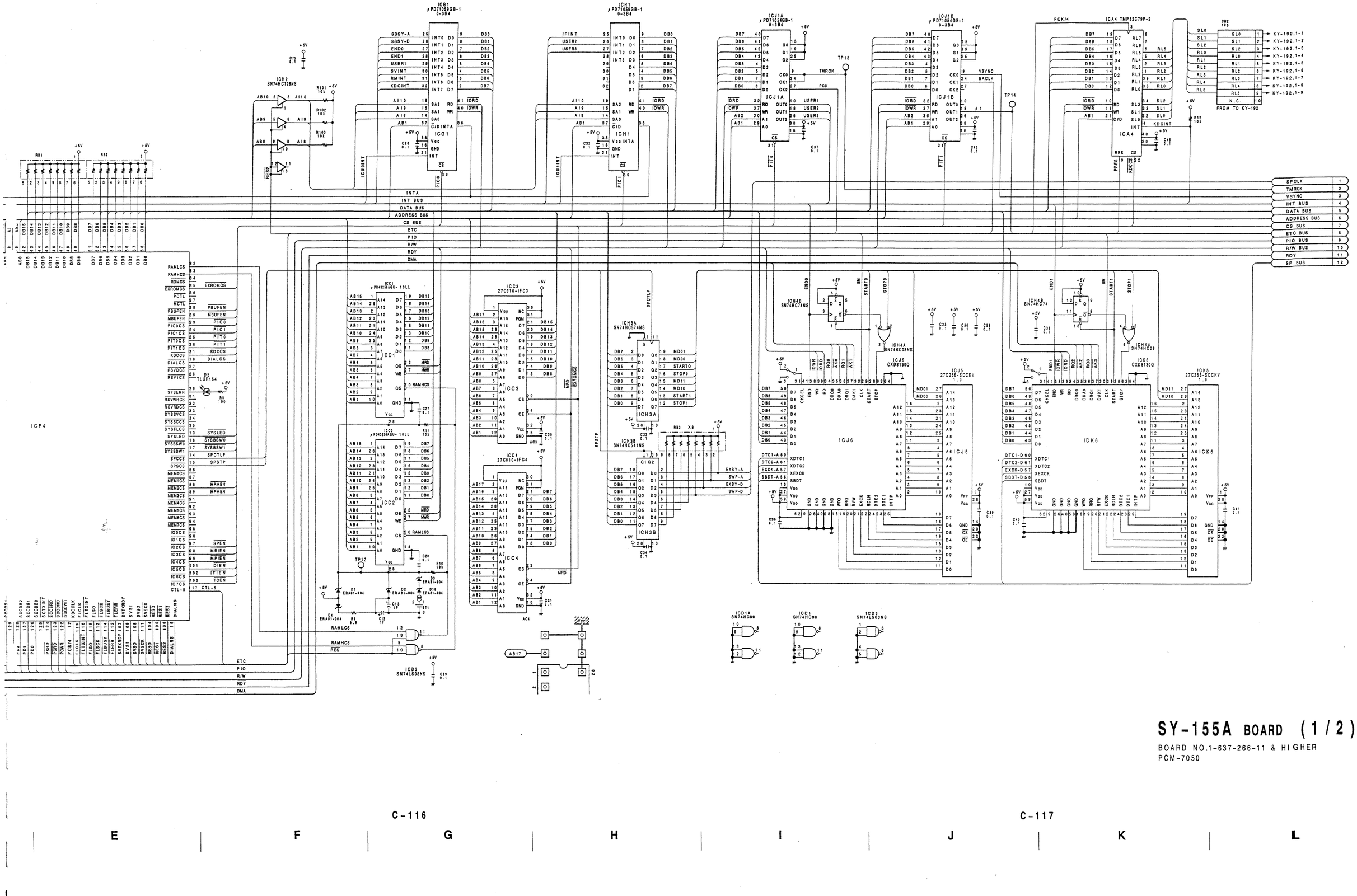

SY-155A BOARD (1/2)

BOARD NO.1-637-266-11 & HIGHER
PCM-7050

SY-155A(2/2) BOARD (PCM-7050)
System Control

CN3
1 → SV-123,103-1
2 → SV-123,103-2
3 → SV-123,103-3
4 → SV-123,103-4
5 → SV-123,103-5
6 → SV-123,103-6
7 → SV-123,103-7
8

CN4
1 → KY-192,2-1
2 → KY-192,2-2
3 → KY-192,2-3
4 → KY-192,2-4
5 → KY-192,2-5
6 → KY-192,2-6
7 → KY-192,2-7
8 → KY-192,2-8

CN5
1 → KY-192,3-1
2 → KY-192,3-2
3 → KY-192,3-3
4 → KY-192,3-4
5 → KY-192,3-5
6 → KY-192,3-6
7
8

CN9
1 → SP-13,9-1
2 → SP-13,9-2
3 → SP-13,9-3
4 → SP-13,9-4
5 → SP-13,9-5
6 → SP-13,9-6
7 → SP-13,9-7
8 → SP-13,9-8
9 → SP-13,9-9
10 → SP-13,9-10
11 → SP-13,9-11
12 → SP-13,9-12
13 → SP-13,9-13
14 → SP-13,9-14
15 → SP-13,9-15
16 → SP-13,9-16
17 → SP-13,9-17
18 → SP-13,9-18
19 → SP-13,9-19
20 → SP-13,9-20

CN8
1 → SP-13,1-1
2 → SP-13,1-2
3 → SP-13,1-3
4 → SP-13,1-4
5 → SP-13,1-5
6 → SP-13,1-6
7 → SP-13,1-7
8 → SP-13,1-8
9 → SP-13,1-9
10 → SP-13,1-10

CN7
1 → SP-13,2-1
2 → SP-13,2-2
3 → SP-13,2-3
4 → SP-13,2-4
5 → SP-13,2-5
6 → SP-13,2-6
7 → SP-13,2-7
8 → SP-13,2-8
9 → SP-13,2-9
10 → SP-13,2-10
11 → SP-13,2-11
12 → SP-13,2-12
13 → SP-13,2-13
14 → SP-13,2-14

1 SPCLK
2 TMRCK
3 VSYNC
4 INT BUS
5 DATA BUS
6 ADDRESS BUS
7 CS BUS
8 ETC BUS
9 PIO
10 R/W BUS
11 RDY
12 SP BUS

ICH5A SN74HC04NS
SVTxRDY
SVS0
SVS1
SVSCK
SVINT
RES1
FROM TO SV-123

CN4 8p
RESET0
FLCLK
GND
FLTXINT
FLS0
FLSCK
FLBUSY
FLERR
FROM TO KY-192

DIALRS
ICF5 μPD4702G
DIALCS
CN5 8p
DIALA
DIALB
GNDK
DTPPM
BCK
LRCK
N.C.
FROM TO KY-192

ICG3 SN74HC574NS
SYSLED
D8 TLUR184
D9 TLUG184
D10 TLUG184
D11 TLUG184
D12 TLUR184
D13 TLUR184

ICG5 SN74HC541NS
PCK
PCK/4
RES1
IORD
IOWR
MRD
MWR
JPCK
JPCK/4
JRES
JIORD
JIOWR
JMRD
JMWR
CLKRTN

ICG6 SN74HC540NS
DATFRMX
SBSY-A
SBSY-D
TCGINT
TCRINT
JDATFRM
JSBSY-A
JSBSY-B
JTCGINT
JTCRINT

JDATFRM
DTC1-A
DTC2-A
EXCK-A
SBDT-A
JSBSY-A
EXSY-A
SWP-A
JTMRCK
DTC1-D
DTC2-D
EXCK-D
SBDT-D
JSBSY-D
EXSY-D
SWP-D

ICK3 UPD78C11ACW-F08
RESET
MODE1
MODE0
X1
X2
STOP
INT1
INT2
NMI
TxD
RxD
SCK
PCK
BACLK
PRES
ALE
RD
WR
CTL-5

ICL4B SN74HC573NS
ICL4A SN74HC245NS
RB16
ICK4 μPD71051GB-1 8-3B4
CS
RD
WR
TXI
RXI
CLK
TXC
RXC
RES
Vcc
GND
DSR
CTS
RXD
TXD
C/D

IC4A SN74HC138NS
IC4B SN74HC32NS
PCWR
PCRD
PSRD

ICH5B MC34051P

CN6 6p
TXC
TXA
TXB
RXB
RXA
RXC
FROM TO 9pin Connector

ICG4 SN74HC32NS
IORD
PBUFEN
MRD
MBUFEN
ICH4A SN74HC08
ICH5A SN74HC04S

ICA5 SN74HC541NS
ICA6 SN74HC245NS
ICB5 SN74HC541NS
ICB6 SN74HC245NS
SW5
SW3
SYSBSW11
SYSBSW1
SYSBSW01
SYSBSW0

ICC6 SN74HC541NS
SPEN
MRIEN
MPIEN
DIEN
IFIEN
TCEN
MRMEN
MPMEN
JSPEN
JMRIEN
JMPIEN
JDIEN
JIFIEN
JTCEN
JMRMEN
JMPMEN

ICB6 SN74HC245NS
ICA6 SN74HC245NS
JDB7
JDB6
JDB5
JDB4
JDB3
JDB2
JDB1
JDB0

ICE5 SN74HC541NS
VSYNC
TMRCK
RMINT
IFINT
DATFRM
RDY
JVSYNC
JTMRCK
JRMINT
JIFINT
JDATFRM
WAIT

ICF6
ICE6
ICD6 SN74HC541NS
AB15
AB14
AB13
AB12
AB11
AB10
AB9
AB8
AB7
AB6
AB5
AB4
AB3
AB2
AB1
AB0
JAB15
JAB14
JAB13
JAB12
JAB11
JAB10
JAB9
JAB8
JAB7
JAB6
JAB5
JAB4
JAB3
JAB2
JAB1
JAB0

ICH5A SN74HC04NS
ICJ4B SN74HC32NS

CN12
RM-77,1-1 … RM-77,1-30

CN11
VCK-2,2-1 … VCK-2,2-30

CN13
1A → MEM-40A,1-15A
1B → MEM-40A,1-15B
1C → MEM-40A,1-15C
2A → MEM-40A,1-14A
2B → MEM-40A,1-14B
2C → MEM-40A,1-14C
3A → MEM-40A,1-13A
3B → MEM-40A,1-13B
3C → MEM-40A,1-13C
4A → MEM-40A,1-12A
4B → MEM-40A,1-12B
4C → MEM-40A,1-12C
5A → MEM-40A,1-11A
5B → MEM-40A,1-11B
5C → MEM-40A,1-11C
6A → MEM-40A,1-10A
6B → MEM-40A,1-10B
6C → MEM-40A,1-10C
7A → MEM-40A,1-9A
7B → MEM-40A,1-9B
7C → MEM-40A,1-9C
8A → MEM-40A,1-8A
8B → MEM-40A,1-8B
8C → MEM-40A,1-8C

CN13
9A → MEM-4
9B → MEM-4
9C → MEM-4
10A → MEM-4
10B → MEM-4
10C → MEM-4
11A → MEM-4
11B → MEM-4
11C → MEM-4
12A → MEM-4
12B → MEM-4
12C → MEM-4
13A → MEM-4
13B → MEM-4
13C → MEM-4
14A → MEM-4
14B → MEM-4
14C → MEM-4
15A → MEM-4
15B → MEM-4
15C → MEM-4
16A → MEM-4
16B → MEM-4
16C → MEM-4

C-121
C-122

A B C D E F G H

SY-155A(2/2)

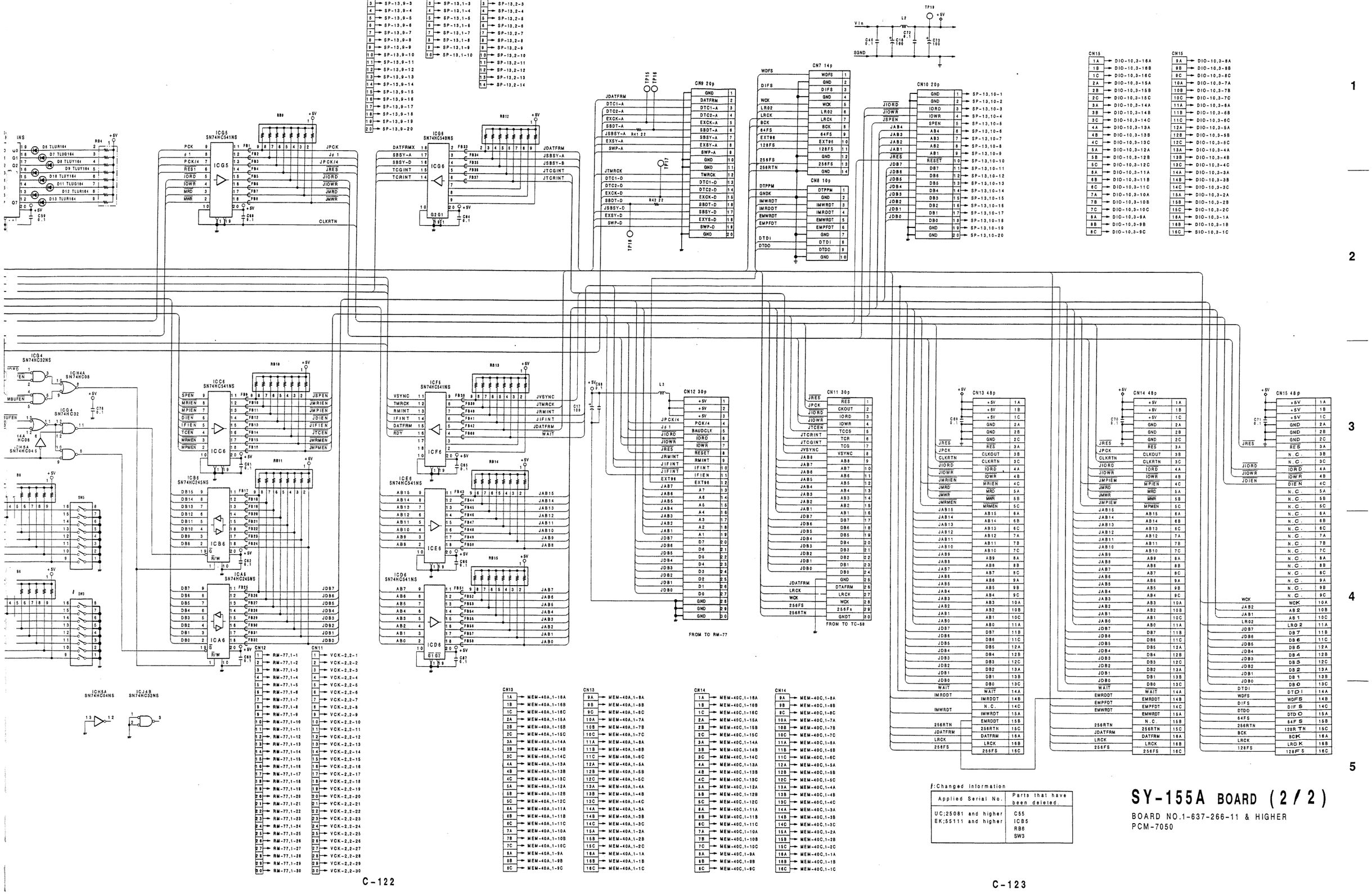

1

2

3

4

5

†:Changed information

Applied Serial No.	Parts that have been deleted.
UC;25081 and higher EK;55111 and higher	C55 ICB5 RB6 SW3

SY-155A BOARD (2/2)

BOARD NO.1-637-266-11 & HIGHER
PCM-7050

E F G H I J K L

VR-109 BOARD (PCM-7050)
Level Control

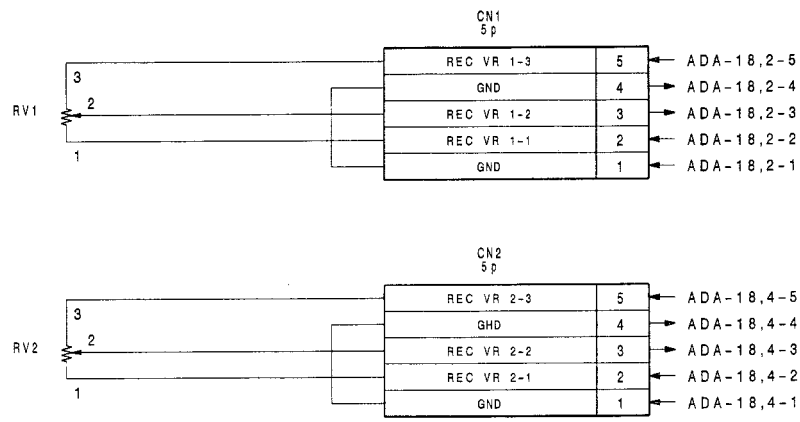

VR-109 BOARD

BOARD NO.1-637-284-12 & HIGHER
PCM-7050

A | B | C | D

FRAME(1/4)

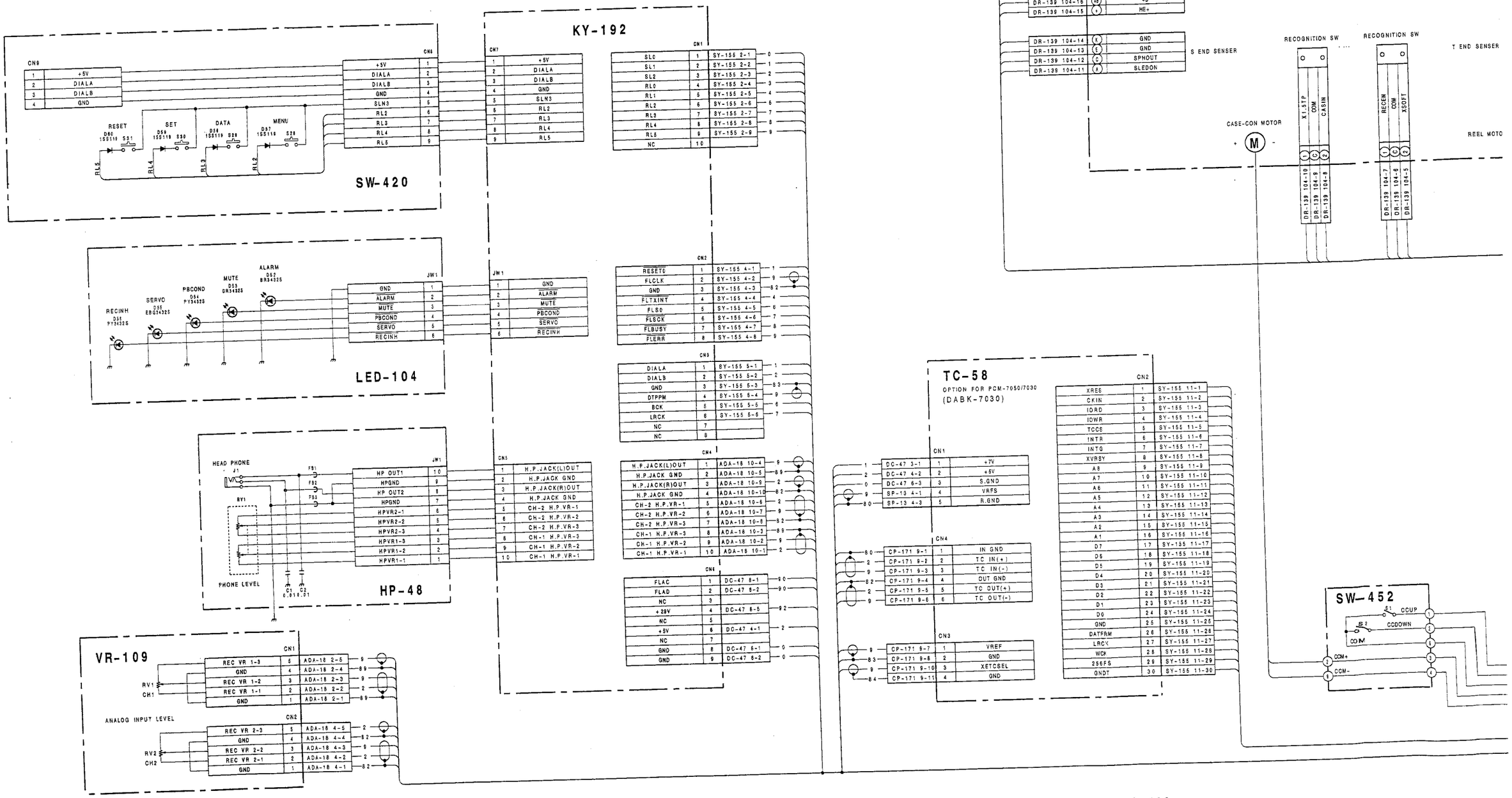

C-129 C-130

A B C D E F G H

FROM TO SP-13

RF-31

CN3

GND	1	SP-13 8-1
PBDT-A	2	SP-13 8-2
GND	3	SP-13 8-3
REDT-A	4	SP-13 8-4
GND	5	SP-13 8-5
ATD2	6	SP-13 8-6
REPB	7	SP-13 8-7
LTS	8	SP-13 8-8
GND	9	SP-13 8-9
REDT-D	10	SP-13 8-10
GND	11	SP-13 8-11
PBDT-D	12	SP-13 8-12
GND	13	SP-13 8-13

CN1

1	GND
2	ACH
3	+5V
4	+5V
5	BCH
6	GND
7	GND
8	GND
9	GND
10	GND
11	B' CH
12	+5V
13	+5V
14	A' CH
15	GND

CN2

GND	1
PBRF-A	2
GND	3
RFDET-A	4
AGC-A	5
GND	6
PILOT-A	7
SWP-A	8
DETUP	9
SWP-D	10
RFDET-D	11
GND	12
PBRF-D	13
GND	14
+5V	15
+5V	16
GND	17
GND	18
PBDT-A	19
GND	20

SV-123

CN105

1	GND
2	PBRF-A
3	GND
4	RFDET-A
5	AGC-A
6	GND
7	PILOT-A
8	SWP-A
9	DETUP
10	SWP-D
11	RFDET-D
12	GND
13	PBRF-D
14	GND
15	+5V
16	+5V
17	GND
18	GND
19	PBDT-A
20	GND

CN102

C94M	1	SP-13 6-1
PLCK-A	2	SP-13 6-2
CRCM-A	3	SP-13 6-3
GND	4	SP-13 6-4
SRVS	5	SP-13 6-5
SVRF-A	6	SP-13 6-6
DFG	7	SP-13 6-7
LSWP	8	SP-13 6-8
AREA	9	SP-13 6-9
RFW	10	SP-13 6-10
NC	11	
GND	12	SP-13 6-12

CN103

RDY	1	SY-155 3-1
SO0	2	SY-155 3-2
SI0	3	SY-155 3-3
SCK0	4	SY-155 3-4
REQ	5	SY-155 3-5
INIT	6	SY-155 3-6
GND	7	SY-155 3-7
NC	8	

CN104

ATSY-A	1	SP-13 7-1
GND	2	SP-13 7-2
RFDET-A	3	SP-13 7-3
ATSY-D	4	SP-13 7-4
GND	5	SP-13 7-5
RFDET-D	6	SP-13 7-6
GND	7	SP-13 7-7

CN106

+5V	1	DC-47 4-3
+5V	2	DC-47 4-4
GND	3	DC-47 5-4
GND	4	DC-47 5-5

ADA-18

CN1

CH-1 LINE IN(-)	1	CP-171 2-3
CH-1 LINE IN(+)	2	CP-171 2-2
CH-1 LINE IN GND	3	CP-171 2-1

CN3

CH-2 LINE IN(-)	1	CP-171 2-7
CH-2 LINE IN(+)	2	CP-171 2-6
CH-2 LINE IN GND	3	CP-171 2-5

CN5

CH-1 LINE OUT(-)	1	CP-171 4-3
CH-1 LINE OUT(+)	2	CP-171 4-2
CH-1 LINE OUT GND	3	CP-171 4-1

CN6

CH-1 -22V IN	1	PS-211 2-7
CH-1 ANALOG GND	2	PS-211 2-8
CH-1 +22V IN	3	PS-211 2-9

CN7

CH-2 LINE OUT(-)	1	CP-171 4-8
CH-2 LINE OUT(+)	2	CP-171 4-7
CH-2 LINE OUT GND	3	CP-171 4-6

CN8

CH-2 -22V IN	1	PS-211 2-6
CH-2 ANALOG GND	2	PS-211 2-5
CH-2 +22V IN	3	PS-211 2-4

CN9

CH-1 MONITOR OUT	1	CP-171 6-1
CH1 MONITOR OUT GND	2	CP-171 6-2
CH-2 MONITOR OUT	3	CP-171 6-3
CH2 MONITOR OUT GND	4	CP-171 6-4

CN11

-15V IN	1	PS-211 2-2
ANALOG GND	2	PS-211 2-3
+15V IN	3	PS-211 2-1

CN12

DIGITAL +5V OUT	1	PS-211 3-3
LIPS MUTE IN	2	PS-211 3-2
GND	3	PS-211 3-1
+5V IN	4	DC-47 4-6
DIGITAL GND	5	DC-47 6-9
-5V IN	6	DC-47 5-1

CN13

GND	1	SP-13 3-1
DTAD OUT	2	SP-13 3-2
GND	3	SP-13 3-3
DTDA	4	SP-13 3-4
GND	5	SP-13 3-5
LRCK	6	SP-13 3-6
GND	7	SP-13 3-7
BCK	8	SP-13 3-8
GND	9	SP-13 3-9
256FS	10	SP-13 3-10
EMPH	11	SP-13 3-11
HIDE EMP	12	SP-13 3-12
NC	13	SP-13 3-13

CN2

VR-109 1-1	1	GND
VR-109 1-2	2	CH-1 REC VR-1
VR-109 1-3	3	CH-1 REC VR-2
VR-109 1-4	4	GND
VR-109 1-5	5	CH-1 REC VR-3

CN4

VR-109 2-1	1	GND
VR-109 2-2	2	CH-2 REC VR-1
VR-109 2-3	3	CH-2 REC VR-2
VR-109 2-4	4	GND
VR-109 2-5	5	CH-2 REC VR-3

CN10

KY-192 4-10	1	CH-1 H.P.VR-1
KY-192 4-9	2	CH-1 H.P.VR-2
KY-192 4-8	3	CH-1 H.P.VR-3
KY-192 4-1	4	H.P.JACK(L)OUT
KY-192 4-2	5	H.P.JACK GND
KY-192 4-5	6	CH-2 H.P.VR-1
KY-192 4-6	7	CH-2 H.P.VR-2
KY-192 4-7	8	CH-2 H.P.VR-3
KY-192 4-3	9	H.P.JACK(R)OUT
KY-192 4-4	10	H.P.JACK GND

DR-139

CN101

1	COM
2	PG
3	FG
4	VG
5	HW-
6	HW+
7	HW-
8	HV-
9	HU-
10	HU+
11	HG
12	VL
13	UL
14	WL

CN108

DON	1
DDIR	2
DER	3
DFG	4
LPG	5
GND	6
CFG	7
CER	8
CDIR	9
TENON	10
RTLOCK	11
PMON	12
PMKICK	13
RTFG	14
VRT	15
RSFG	16
VRS	17
GND	18
TLED	19
TRTN	20
SLED	21
SRTN	22
SOFT	23
RECEN	24
CASIN	25
X1.5TP	26
LIMSW	27
RESTOP	28
REFWD	29
DEW	30
CCMIM	31
CCMOUT	32
CCUP	33
CCDOWN	34
LMUNTH	35
LMTH	36

CN101

1	DON
2	DDIR
3	DER
4	DFG
5	LPG
6	GND
7	CFG
8	CER
9	CDIR
10	TENON
11	RTLOCK
12	PMON
13	PMKICK
14	RTFG
15	VRT
16	RSFG
17	VRS
18	GND
19	TLED
20	TRTN
21	SLED
22	SRTN
23	SOFT
24	RECEN
25	CASIN
26	X1.5TP
27	LIMSW
28	RESTOP
29	REFWD
30	DEW
31	CCMIM
32	CCMOUT
33	CCUP
34	CCDOWN
35	LMUNTH
36	LMTH

CN103

1	+5V
2	RS
3	VST
4	GND
5	XTCK
6	RT
7	VSS
8	DIRT
9	FGT
10	FGS
11	DIRS
12	GND

CN104

1	TLEDON
2	TPHOUT
3	GND
4	GND
5	SOFT
6	COM
7	RECEN
8	CASIN
9	COM
10	X1.5TP
11	SLEDON
12	SPHOUT
13	GND
14	GND
15	HE+
16	+B
17	HE-
18	GND
19	COM
20	LIMSW

CN105

1	DEWSENS
2	GND

CN102

1	OUTB
2	GND
3	OUTA
4	VCC
5	VS
6	GND
7	+7V
8	RS
9	LM+
10	LM-
11	RESTOP
12	REFWD
13	COM

CN107

1	PLN1
2	PLN2

CN106

1	CCUP
2	CCDOWN
3	COM
4	CCM+
5	CCM-

CN109

+7V	1	DC-47 3-3
GND	2	DC-47 6-6
+5V	3	DC-47 4-5
GND	4	DC-47 6-7
GND	5	DC-47 6-8

M LOADING MOTOR

ROTARY ENCODER

LM-	1	DR-139 102-10
LM+	2	DR-139 102-9
RESTOP	3	DR-139 102-11
REFWD	4	DR-139 102-12
COM	5	DR-139 102-13

CAPSTAN MOTOR M

OUTB	1	DR-139 102-1
GND	2	DR-139 102-2
OUTA	3	DR-139 102-3
VSC	4	DR-139 102-7
VS	1	DR-139 102-5
GND	2	DR-139 102-6
VCC	3	DR-139 102-4
RS	4	DR-139 102-8

IGNITION SW

T END SENSER

TLEDON	A	DR-139 104-1
TPHOUT	C	DR-139 104-2
GND	E	DR-139 104-3
GND	F	DR-139 104-4

REEL PLUNGER

REEL MOTOR M

DR-139 104-7 (U) (2)
-139 1C
DR-139 104-5

RECEN XSOFT

FROM TO SY-155

MAIN HARNESS

FRAME(1/4)

C-131 C-132

I J K L M N O P

1 2 3 4 5

FRAME(2/4)

FRAME(2/4)

FROM TO RF-31

CN8

RF-31 3-1	1	GND
RF-31 3-2	2	PBDT-A
RF-31 3-3	3	GND
RF-31 3-4	4	REDT-A
RF-31 3-5	5	GND
RF-31 3-6	6	ATD2
RF-31 3-7	7	REPB
RF-31 3-8	8	LTS
RF-31 3-9	9	GND
RF-31 3-10	10	REDT-D
RF-31 3-11	11	GND
RF-31 3-12	12	PBDT-D
RF-31 3-13	13	GND

CN3

ADA-18 13-1	1	GND
ADA-18 13-2	2	DTAD
ADA-18 13-3	3	GND
ADA-18 13-4	4	DTDA
ADA-18 13-5	5	GND
ADA-18 13-6	6	LRCK
ADA-18 13-7	7	GND
ADA-18 13-8	8	BCK
ADA-18 13-9	9	GND
ADA-18 13-10	10	256FS
ADA-18 13-11	11	EMP
ADA-18 13-12	12	DEEMP
ADA-18 13-13	13	RESET

CN4

TC-58 1-4	1	VRFS
	2	NC
TC-58 1-5	3	GND

CN6

SV-123 102-1	1	C94M
SV-123 102-2	2	PLCK-A
SV-123 102-3	3	CRCM-A
SV-123 102-4	4	GND
SV-123 102-5	5	SRVS
SV-123 102-6	6	SVRF
SV-123 102-7	7	DFG
SV-123 102-8	8	LSWP
SV-123 102-9	9	AREA
SV-123 102-10	10	RFW
	11	NC
SV-123 102-12	12	GND

CN7

SV-123 104-1	1	ATSY-A
SV-123 104-2	2	GND
SV-123 104-3	3	RFDET-A
SV-123 104-4	4	ATSY-D
SV-123 104-5	5	GND
SV-123 104-6	6	RFDET-D
SV-123 104-7	7	GND

CN11

1	CKRS-A
2	CLK
3	GND
4	D0-A
5	D1-A
6	D2-A
7	D3-A
8	D4-A
9	D5-A
10	D6-A
11	D7-A
12	MNTG-A
13	SWP-A

CN12

1	CKRS-D
2	CLK
3	GND
4	D0-D
5	D1-D
6	D2-D
7	D3-D
8	D4-D
9	D5-D
10	D6-D
11	D7-D
12	MNTG-D
13	SWP-D

CN9

GND	1
DATFRM	2
DTC1-A	3
DTC2-A	4
EXCK-A	5
SBDT-A	6
SBSY-A	7
EXSY-A	8
SWP-A	9
GND	10
GND	11
TMRCK	12
DTC1-D	13
DTC2-D	14
EXCK-D	15
SBDT-D	16
SBSY-D	17
EXSY-D	18
SWP-D	19
GND	20

CN10

GND	1
GND	2
IORD	3
IOWR	4
SPEN	5
AB4	6
AB3	7
AB2	8
AB1	9
RESET	10
DB7	11
DB6	12
DB5	13
DB4	14
DB3	15
DB2	16
DB1	17
DB0	18
GND	19
GND	20

CN1

DTPPM	1	SY-155 8-1
GND	2	SY-155 8-2
IMWRDT	3	SY-155 8-3
IMRDDT	4	SY-155 8-4
EMWRDT	5	SY-155 8-5
EMPFDT	6	SY-155 8-6
GND	7	SY-155 8-7
DTDI	8	SY-155 8-8
DTDO	9	SY-155 8-9
GND	10	SY-155 8-10

CN2

WDFS	1	SY-155 7-1
GND	2	SY-155 7-2
DIFS	3	SY-155 7-3
GND	4	SY-155 7-4
WCK	5	SY-155 7-5
LR02	6	SY-155 7-6
LRCK	7	SY-155 7-7
BCK	8	SY-155 7-8
64FS	9	SY-155 7-9
EXT96	10	SY-155 7-10
128FS	11	SY-155 7-11
GND	12	SY-155 7-12
256FS	13	SY-155 7-13
GND	14	SY-155 7-14

CN5

-5V	1	DC-47 5-3
+5V	2	DC-47 4-7
+5V	3	DC-47 4-8
GND	4	DC-47 6-10
GND	5	DC-47 7-1
GND	6	DC-47 7-2

SP-13

CN11

VCK-2 2-1	1	RES
VCK-2 2-2	2	CKOOUT
VCK-2 2-3	3	IORD
VCK-2 2-4	4	IOWR
VCK-2 2-5	5	TCCS
VCK-2 2-6	6	TCR
VCK-2 2-7	7	TCG
VCK-2 2-8	8	VSYNC
VCK-2 2-9	9	AB8
VCK-2 2-10	10	AB7
VCK-2 2-11	11	AB6
VCK-2 2-12	12	AB5
VCK-2 2-13	13	AB4
VCK-2 2-14	14	AB3
VCK-2 2-15	15	AB2
VCK-2 2-16	16	AB1
VCK-2 2-17	17	DB7
VCK-2 2-18	18	DB6
VCK-2 2-19	19	DB5
VCK-2 2-20	20	DB4
VCK-2 2-21	21	DB3
VCK-2 2-22	22	DB2
VCK-2 2-23	23	DB1
VCK-2 2-24	24	DB0
VCK-2 2-25	25	GND
VCK-2 2-26	26	DATFRM
VCK-2 2-27	27	LRCK
VCK-2 2-28	28	WCK
VCK-2 2-29	29	256FS
VCK-2 2-30	30	GNDT

SY-155

CN2

KY-192 1-1	1	SL0
KY-192 1-2	2	SL1
KY-192 1-3	3	SL2
KY-192 1-4	4	RL0
KY-192 1-5	5	RL1
KY-192 1-6	6	RL2
KY-192 1-7	7	RL3
KY-192 1-8	8	RL4
KY-192 1-9	9	RL5
	10	NC

CN3

SV-123 103-1	1	SVTXRDY
SV-123 103-2	2	SVSO
SV-123 103-3	3	SVSI
SV-123 103-4	4	SVSCK
SV-123 103-5	5	SVINT
SV-123 103-6	6	INTT
SV-123 103-7	7	GND
	8	NC

CN4

KY-192 2-1	1	RESETO
KY-192 2-2	2	FLCLK
KY-192 2-3	3	GND
KY-192 2-4	4	FLTXINT
KY-192 2-5	5	FLSO
KY-192 2-6	6	FLSCK
KY-192 2-7	7	FLBUSY
KY-192 2-8	8	FLERR

CN5

KY-192 3-1	1	DIALA
KY-192 3-2	2	DIALB
KY-192 3-3	3	GND
KY-192 3-4	4	DTPPM
KY-192 3-5	5	BCK
KY-192 3-6	6	LRCK
	7	NC
	8	NC

CN7

SP-13 2-1	1	WDFS
SP-13 2-2	2	GND
SP-13 2-3	3	DIFS
SP-13 2-4	4	GND
SP-13 2-5	5	WCK
SP-13 2-6	6	LR02
SP-13 2-7	7	LRCK
SP-13 2-8	8	BCK
SP-13 2-9	9	64FS
SP-13 2-10	10	EXT96
SP-13 2-11	11	128FS
SP-13 2-12	12	GND
SP-13 2-13	13	256FS
SP-13 2-14	14	GND

CN8

SP-13 1-1	1	DTPPM
SP-13 1-2	2	GND
SP-13 1-3	3	IMWRDT
SP-13 1-4	4	IMRDDT
SP-13 1-5	5	EMWRDT
SP-13 1-6	6	EMPFDT
SP-13 1-7	7	GND
SP-13 1-8	8	DTDI
SP-13 1-9	9	DTDO
SP-13 1-10	10	GND

MEM-40A

CN13 CN1

+5V	1A	18A	+5V
+5V	1B	18B	+5V
+5V	1C	18C	+5V
GND	2A	18A	GND
GND	2B	18B	GND
GND	2C	18C	GND
RES	3A	14A	RESET
CLKOUT	3B	14B	CLKOUT
CLKRTN	3C	14C	CLKRTN
IORD	4A	13A	IORD
IOWR	4B	13B	IOWR
MRIEN	4C	13C	IOEN
MRD	5A	12A	MRD
MWR	5B	12B	MWR
MRMEN	5C	12C	MEN
AB15	6A	11A	AB15
AB14	6B	11B	AB14
AB13	6C	11C	AB13
AB12	7A	10A	AB12
AB11	7B	10B	AB11
AB10	7C	10C	AB10
AB9	8A	9A	AB9
AB8	8B	9B	AB8
AB7	8C	9C	AB7
AB6	9A	8A	AB6
AB5	9B	8B	AB5
AB4	9C	8C	AB4
AB3	10A	7A	AB3
AB2	10B	7B	AB2
AB1	10C	7C	AB1
AB0	11A	6A	AB0
DB7	11B	6B	DB7
DB6	11C	6C	DB6
DB5	12A	5A	DB5
DB4	12B	5B	DB4
DB3	12C	5C	DB3
DB2	13A	4A	DB2
DB1	13B	4B	DB1
DB0	13C	4C	DB0
WAIT	14A	3A	WAIT
IMRDDT	14B	3B	IMRDDT
NC	14C	3C	NC
IMWRDT	15A	2A	IMWRDT
EMRDDT	15B	2B	EMRDDT
256RTN	15C	2C	256RTN
DATFRM	16A	1A	DATFRM
LRCK	16B	1B	LRCK
256FS	16C	1C	256FS

CN1

+5V	1	DC-47 4-9
+5V	2	DC-47 4-10
GND	3	DC-47 7-3
GND	4	DC-47 7-4

CN6

RXC	1	CP-171 7-4
RXA	2	CP-171 7-6
RXB	3	CP-171 7-5
TXB	4	CP-171 7-2
TXA	5	CP-171 7-1
TXC	6	CP-171 7-3

SP-17C or MEM-40C

OPTION FOR PCM-7050 (DABK-7055)

CN14 CN1

+5V	1A	18A	+5V
+5V	1B	18B	+5V
+5V	1C	18C	+5V
GND	2A	18A	GND
GND	2B	18B	GND
GND	2C	18C	GND
RES	3A	14A	RES
CLKOUT	3B	14B	CLKOUT
CLKRTN	3C	14C	CLKRTN
IORD	4A	13A	IORD
IOWR	4B	13B	IOWR
MPIEN	4C	13C	IOEN
MRD	5A	12A	MRD
MWR	5B	12B	MWR
MPMEN	5C	12C	MEN
AB15	6A	11A	AB15
AB14	6B	11B	AB14
AB13	6C	11C	AB13
AB12	7A	10A	AB12
AB11	7B	10B	AB11
AB10	7C	10C	AB10
AB9	8A	9A	AB9
AB8	8B	9B	AB8
AB7	8C	9C	AB7
AB6	9A	8A	AB6
AB5	9B	8B	AB5
AB4	9C	8C	AB4
AB3	10A	7A	AB3
AB2	10B	7B	AB2
AB1	10C	7C	AB1
AB0	11A	6A	AB0
DB7	11B	6B	DB7
DB6	11C	6C	DB6
DB5	12A	5A	DB5
DB4	12B	5B	DB4
DB3	12C	5C	DB3
DB2	13A	4A	DB2
DB1	13B	4B	DB1
DB0	13C	4C	DB0
WAIT	14A	3A	WAIT
EMRDDT	14B	3B	EMRDDT
EMPFDT	14C	3C	EMPFDT
EMWRDT	15A	2A	EMWRDT
NC	15B	2B	NC
256RTN	15C	2C	256RTN
DATFRM	16A	1A	DATFRM
LRCK	16B	1B	LRCK
256FS	16C	1C	256FS

CN12

+5V	1	RM-77 1-1
+5V	2	RM-77 1-2
+5V	3	RM-77 1-3
PCK/4	4	RM-77 1-4
BAUDCLK	5	RM-77 1-5
IORD	6	RM-77 1-6
IOWR	7	RM-77 1-7
RESET	8	RM-77 1-8
RMINT	9	RM-77 1-9
IFINT	10	RM-77 1-10
IFIEN	11	RM-77 1-11
EXT96	12	RM-77 1-12
A7	13	RM-77 1-13
A6	14	RM-77 1-14
A5	15	RM-77 1-15
A4	16	RM-77 1-16
A3	17	RM-77 1-17
A2	18	RM-77 1-18
A1	19	RM-77 1-19
D7	20	RM-77 1-20
D6	21	RM-77 1-21
D5	22	RM-77 1-22
D4	23	RM-77 1-23
D3	24	RM-77 1-24
D2	25	RM-77 1-25
D1	26	RM-77 1-26
D0	27	RM-77 1-27
GND	28	RM-77 1-28
GND	29	RM-77 1-29
GND	30	RM-77 1-30

FROM TO TC-58

MAIN HARNESS

C-137

C-138

A B C D E F G H

SY-155

MEM-40A

CN13		CN1	
+5V	1A	16A	+5V
+5V	1B	16B	+5V
+5V	1C	16C	+5V
GND	2A	15A	GND
GND	2B	15B	GND
GND	2C	15C	GND
RES	3A	14A	RESET
CLKOUT	3B	14B	CLKOUT
CLKRTN	3C	14C	CLKRTN
IORD	4A	13A	IORD
IOWR	4B	13B	IOWR
MRIEN	4C	13C	IOEN
MRD	5A	12A	MRD
MWR	5B	12B	MWR
MRMEN	5C	12C	MEN
AB15	6A	11A	AB15
AB14	6B	11B	AB14
AB13	6C	11C	AB13
AB12	7A	10A	AB12
AB11	7B	10B	AB11
AB10	7C	10C	AB10
AB9	8A	9A	AB9
AB8	8B	9B	AB8
AB7	8C	9C	AB7
AB6	9A	8A	AB6
AB5	9B	8B	AB5
AB4	9C	8C	AB4
AB3	10A	7A	AB3
AB2	10B	7B	AB2
AB1	10C	7C	AB1
AB0	11A	6A	AB0
DB7	11B	6B	DB7
DB6	11C	6C	DB6
DB5	12A	5A	DB5
DB4	12B	5B	DB4
DB3	12C	5C	DB3
DB2	13A	4A	DB2
DB1	13B	4B	DB1
DB0	13C	4C	DB0
WAIT	14A	3A	WAIT
IMRDDT	14B	3B	IMRDDT
NC	14C	3C	NC
IMWRDT	15A	2A	IMWRDT
EMRDDT	15B	2B	EMRDDT
256RTN	15C	2C	256RTN
DATFRM	16A	1A	DATFRM
LRCK	16B	1B	LRCK
256FS	16C	1C	256FS

CN2

0	KY-192 1-1	1	SL0
1	KY-192 1-2	2	SL1
2	KY-192 1-3	3	SL2
3	KY-192 1-4	4	RL0
4	KY-192 1-5	5	RL1
6	KY-192 1-6	6	RL2
7	KY-192 1-7	7	RL3
8	KY-192 1-8	8	RL4
9	KY-192 1-9	9	RL5
	10		NC

CN3

1	SV-123 103-1	1	SVTXRDY
2	SV-123 103-2	2	SVSO
3	SV-123 103-3	3	SVSI
4	SV-123 103-4	4	SVSCK
5	SV-123 103-5	5	SVINT
6	SV-123 103-6	6	INIT
7	SV-123 103-7	7	GND
		8	NC

CN4

1	KY-192 2-1	1	RESETC
9	KY-192 2-2	2	FLCLK
82	KY-192 2-3	3	GND
4	KY-192 2-4	4	FLTXINT
6	KY-192 2-5	5	FLSO
7	KY-192 2-6	6	FLSCK
8	KY-192 2-7	7	FLBUSY
9	KY-192 2-8	8	FLERR

CN5

1	KY-192 3-1	1	DIALA
2	KY-192 3-2	2	DIALB
83	KY-192 3-3	3	GND
9	KY-192 3-4	4	DTPPM
6	KY-192 3-5	5	BCK
7	KY-192 3-6	6	LRCK
		7	NC
		8	NC

CN7

9	SP-13 2-1	1	WDFS
83	SP-13 2-2	2	GND
9	SP-13 2-3	3	DIFS
84	SP-13 2-4	4	GND
3	SP-13 2-5	5	WCK
4	SP-13 2-6	6	LR02
6	SP-13 2-7	7	LRCK
7	SP-13 2-8	8	BCK
8	SP-13 2-9	9	64FS
9	SP-13 2-10	10	EXT96
9	SP-13 2-11	11	128FS
86	SP-13 2-12	12	GND
9	SP-13 2-13	13	256FS
89	SP-13 2-14	14	GND

CN8

1	SP-13 1-1	1	DTPPM
0	SP-13 1-2	2	GND
2	SP-13 1-3	3	IMWRDT
3	SP-13 1-4	4	IMRDDT
4	SP-13 1-5	5	EMWRDT
6	SP-13 1-6	6	EMPFDT
0	SP-13 1-7	7	GND
7	SP-13 1-8	8	DTDI
8	SP-13 1-9	9	DTDO
0	SP-13 1-10	10	GND

CN1

+5V	1	DC-47 4-9	2
+5V	2	DC-47 4-10	2
GND	3	DC-47 7-3	0
GND	4	DC-47 7-4	0

CN6

RXC	1	CP-171 7-4	82
RXA	2	CP-171 7-6	2
RXB	3	CP-171 7-5	9
TXB	4	CP-171 7-2	9
TXA	5	CP-171 7-1	2
TXC	6	CP-171 7-3	80

SP-17C or MEM-40C

OPTION FOR PCM-7050 (DABK-7055)

CN14		CN1	
+5V	1A	16A	+5V
+5V	1B	16B	+5V
+5V	1C	16C	+5V
GND	2A	15A	GND
GND	2B	15B	GND
GND	2C	15C	GND
RES	3A	14A	RES
CLKOUT	3B	14B	CLKOUT
CLKRTN	3C	14C	CLKRTN
IORD	4A	13A	IORD
IOWR	4B	13B	IOWR
MPIEN	4C	13C	IOEN
MRD	5A	12A	MRD
MWR	5B	12B	MWR
MPMEN	5C	12C	MEN
AB15	6A	11A	AB15
AB14	6B	11B	AB14
AB13	6C	11C	AB13
AB12	7A	10A	AB12
AB11	7B	10B	AB11
AB10	7C	10C	AB10
AB9	8A	9A	AB9
AB8	8B	9B	AB8
AB7	8C	9C	AB7
AB6	9A	8A	AB6
AB5	9B	8B	AB5
AB4	9C	8C	AB4
AB3	10A	7A	AB3
AB2	10B	7B	AB2
AB1	10C	7C	AB1
AB0	11A	5A	AB0
DB7	11B	6B	DB7
DB6	11C	6C	DB6
DB5	12A	5A	DB5
DB4	12B	5B	DB4
DB3	12C	5C	DB3
DB2	13A	4A	DB2
DB1	13B	4B	DB1
DB0	13C	4C	DB0
WAIT	14A	3A	WAIT
EMRDDT	14B	3B	EMRDDT
EMPFDT	14C	3C	EMPFDT
EMWRDT	15A	2A	EMWRDT
NC	15B	2B	NC
256RTN	15C	2C	256RTN
DATFRM	16A	1A	DATFRM
LRCK	16B	1B	LRCK
256FS	16C	1C	256FS

CN12

+5V	1	RM-77 1-1	
+5V	2	RM-77 1-2	
+5V	3	RM-77 1-3	
PCK/4	4	RM-77 1-4	
BAUDCLK	5	RM-77 1-5	
IORD	6	RM-77 1-6	
IOWR	7	RM-77 1-7	
RESET	8	RM-77 1-8	
RMINT	9	RM-77 1-9	
IFINT	10	RM-77 1-10	
IFIEN	11	RM-77 1-11	
EXT96	12	RM-77 1-12	
A7	13	RM-77 1-13	
A6	14	RM-77 1-14	
A5	15	RM-77 1-15	
A4	16	RM-77 1-16	
A3	17	RM-77 1-17	
A2	18	RM-77 1-18	
A1	19	RM-77 1-19	
D7	20	RM-77 1-20	
D6	21	RM-77 1-21	
D5	22	RM-77 1-22	
D4	23	RM-77 1-23	
D3	24	RM-77 1-24	
D2	25	RM-77 1-25	
D1	26	RM-77 1-26	
D0	27	RM-77 1-27	
GND	28	RM-77 1-28	
GND	29	RM-77 1-29	
GND	30	RM-77 1-30	

DI O-10

OPTION FOR PCM-7030 (DABK-7031)

CN15		CN3	
+5V	1A	16A	+5V
+5V	1B	16B	+5V
+5V	1C	16C	+5V
GND	2A	15A	GND
GND	2B	15B	GND
GND	2C	15C	GND
RES	3A	14A	RESET1
NC	3B	14B	NC
NC	3C	14C	NC
IORD	4A	13A	IORD
IOWR	4B	13B	IOWR
DIEN	4C	13C	DIEN
NC	5A	12A	NC
NC	5B	12B	NC
NC	5C	12C	NC
NC	6A	11A	NC
NC	6B	11B	NC
NC	6C	11C	NC
NC	7A	10A	NC
NC	7B	10B	NC
NC	7C	10C	NC
NC	8A	9A	NC
NC	8B	9B	NC
NC	8C	9C	NC
NC	9A	8A	NC
NC	9B	8B	NC
NC	9C	8C	NC
WCK	10A	7A	WCK
AB2	10B	7B	AB2
AB1	10C	7C	AB1
LR02	11A	6A	LR02
DB7	11B	6B	DB7
DB6	11C	6C	DB6
DB5	12A	5A	DB5
DB4	12B	5B	DB4
DB3	12C	5C	DB3
DB2	13A	4A	DB2
DB1	13B	4B	DB1
DB0	13C	4C	DB0
DTDI	14A	3A	DTDI
WDFS	14B	3B	WDFS
DIFS	14C	3C	DIFS
DTDO	15A	2A	DTDO
64FS	15B	2B	64FS
128RTN	15C	2C	128RTN
BCK	16A	1A	BCK
LRCK	16B	1B	LRCK
128FS	16C	1C	128FS

CN1

AESDI(+)	1	CP-171 12-2	2
AESDI(-)	2	CP-171 12-3	9
GND	3	CP-171 12-1	80
AESDO(+)	4	CP-171 12-5	2
AESDO(-)	5	CP-171 12-6	9
GND	6	CP-171 12-4	82

CN2

W.SYNC IN	1	CP-171 12-7	9
GND	2	CP-171 12-8	83
WD/ DI	3	CP-171 12-10	9
GND	4	CP-171 12-11	84
W.SYNC OUT	5	CP-171 12-12	9
GND	6	CP-171 12-13	86

CN4

+7V	1	DC-47 3-2	1
GND	2	DC-47 7-6	0
GND	3	DC-47 7-7	0

FROM TO RM-77

MAIN HARNESS

FRAME(2/4)

C-138

C-139

1 2 3 4 5

E F G H I J K L

FRAME(3/4)

CP-171

CN2

89	ADA-18 1-3	1	LINE 1 IN(G)	
2	ADA-18 1-2	2	LINE 1 IN(X)	
9	ADA-18 1-1	3	LINE 1 IN(Y)	
		4	NC	
82	ADA-18 3-3	5	LINE 2 IN(G)	
2	ADA-18 3-2	6	LINE 2 IN(X)	
9	ADA-18 3-1	7	LINE 2 IN(Y)	

CN1

LINE 1 IN(G)	1	SW-426 1-1	89
LINE 1 IN(X)	2	SW-426 1-2	2
LINE 1 IN(Y)	3	SW-426 1-3	9
NC	4		
LINE 2 IN(G)	5	SW-426 1-4	82
LINE 2 IN(X)	6	SW-426 1-5	2
LINE 2 IN(Y)	7	SW-426 1-6	9

CN4

89	ADA-18 5-3	1	LINE 1 OUT(G)	
2	ADA-18 5-2	2	LINE 1 OUT(X)	
9	ADA-18 5-1	3	LINE 1 OUT(Y)	
		4	NC	
		5	NC	
82	ADA-18 7-3	6	LINE 2 OUT(G)	
2	ADA-18 7-2	7	LINE 2 OUT(X)	
9	ADA-18 7-1	8	LINE 2 OUT(Y)	

CN3

LINE 1 OUT(G)	1	CP-172A 2-1	80
LINE 1 OUT(X)	2	CP-172A 2-2	2
LINE 1 OUT(Y)	3	CP-172A 2-3	9
NC	4		
NC	5		
LINE 2 OUT(G)	6	CP-172B 2-1	84
LINE 2 OUT(X)	7	CP-172B 2-2	2
LINE 2 OUT(Y)	8	CP-172B 2-3	9

CN5

9	ADA-18 9-1	1	MON 1 OUT(X)	
89	ADA-18 9-2	2	MON 1 OUT(G)	
2	ADA-18 9-3	3	MON 2 OUT(X)	
82	ADA-18 9-4	4	MON 2 OUT(G)	

CN6

MON 1 OUT(X)	1	CP-158 1-1	9
MON 1 OUT(G)	2	CP-158 1-2	81
MON 2 OUT(X)	3	CP-158 1-3	9
MON 2 OUT(G)	4	CP-158 1-4	83

CN7

2	SY-155 6-5	1	TXA	
3	SY-155 6-4	2	TXB	
80	SY-155 6-6	3	TXC	
82	SY-155 6-1	4	RXC	
8	SY-155 6-3	5	RXB	
2	SY-155 6-2	6	RXA	

CN8

TXA	1	DSUB 9P-2	2
TXB	2	DSUB 9P-7	7
TXC	3	DSUB 9P-4	4
RXC	4	DSUB 9P-6	6
RXB	5	DSUB 9P-3	3
RXA	6	DSUB 9P-8	8

CN9

80	TC-58 4-1	1	TC IN(G)	
2	TC-58 4-2	2	TC IN(X)	
9	TC-58 4-3	3	TC IN(Y)	
82	TC-58 4-4	4	TC OUT(G)	
2	TC-58 4-5	5	TC OUT(X)	
9	TC-58 4-6	6	TC OUT(Y)	
9	TC-58 3-1	7	VIDEO IN(X)	
83	TC-58 3-2	8	VIDEO IN(G)	
		9	NC	
9	TC-58 3-3	10	INT/EXT	
84	TC-58 3-4	11	GND	
		12	NC	

CN10

TC IN(G)	1	CP-159A 2-1	89
TC IN(X)	2	CP-159A 2-2	2
TC IN(Y)	3	CP-159A 2-3	9
TC OUT(G)	4	CP-159B 2-1	82
TC OUT(X)	5	CP-159B 2-2	2
TC OUT(Y)	6	CP-159B 2-3	9
VIDEO IN(X)	7	CP-152 1-1	9
VIDEO IN(G)	8	CP-152 1-2	89
NC	9		
INT/EXT	10	SW-455 1-1	3
GND	11	SW-455 1-2	0
NC	12		

CN12

80	DIO-10 1-3	1	D IN(G)	
2	DIO-10 1-1	2	D IN(X)	
9	DIO-10 1-2	3	D IN(Y)	
82	DIO-10 1-6	4	D OUT(G)	
2	DIO-10 1-4	5	D OUT(X)	
9	DIO-10 1-5	6	D OUT(Y)	
9	DIO-10 2-1	7	WD IN(X)	
83	DIO-10 2-2	8	WD IN(G)	
		9	NC	
9	DIO-10 2-3	10	DI/WD	
84	DIO-10 2-4	11	GND	
9	DIO-10 2-5	12	WD OUT(X)	
86	DIO-10 2-6	13	WD OUT(G)	

CN11

D IN(G)	1	CP-173A 2-1	89
D IN(X)	2	CP-173A 2-2	2
D IN(Y)	3	CP-173A 2-3	9
D OUT(G)	4	CP-173B 2-1	82
D OUT(X)	5	CP-173B 2-2	2
D OUT(Y)	6	CP-173B 2-3	9
WD IN(X)	7	SW-453 1-1	9
WD IN(G)	8	SW-453 1-2	89
NC	9		
DI/WD	10	SW-454 1-1	3
GND	11	SW-454 1-2	0
WD OUT(X)	12	SW-454 1-3	9
WD OUT(G)	13	SW-454 1-4	82

RM-77

CN2 CN1

+5V	1A	1BA	+5V
+5V	1C	1BC	+5V
+5V	2A	1SA	+5V
+5V	2C	1SC	+5V
PCK/4	3A	14A	PCK/4
BAUDCLK	3C	14C	BAUDCLK
IORD	4A	13A	IORD
IOWR	4C	13C	IOWR
RESET	5A	12A	RESET
IFINT	5C	12C	IFINT
IFCS1	6A	11A	IFCS1
IFCS3	6C	11C	IFCS3
IFCS2	7A	10A	IFCS2
D0	7C	10C	D0
A1	8A	9A	A1
D1	8C	9C	D1
A2	9A	8A	A2
D2	9C	8C	D2
A3	10A	7A	A3
D3	10C	7C	D3
NC	11A	6A	NC
D4	11C	6C	D4
NC	12A	5A	NC
D5	12C	5C	D5
IFCS5	13A	4A	IFCS5
D6	13C	4C	D6
IFCS4	14A	3A	IFCS4
D7	14C	3C	D7
GND	15A	2A	GND
GND	15C	2C	GND
GND	16A	1A	GND
GND	16C	1C	GND

CN1

SY-155 12-1	1	+5V	
SY-155 12-2	2	+5V	
SY-155 12-3	3	+5V	
SY-155 12-4	4	PCK/4	
SY-155 12-5	5	BAUDCLK	
SY-155 12-6	6	IORD	
SY-155 12-7	7	IOWR	
SY-155 12-8	8	RESET	
SY-155 12-9	9	RMINT	
SY-155 12-10	10	IFINT	
SY-155 12-11	11	IFIEN	
SY-155 12-12	12	EXT96	
SY-155 12-13	13	AB7	
SY-155 12-14	14	AB6	
SY-155 12-15	15	AB5	
SY-155 12-16	16	AB4	
SY-155 12-17	17	AB3	
SY-155 12-18	18	AB2	
SY-155 12-19	19	AB1	
SY-155 12-20	20	DB7	
SY-155 12-21	21	DB6	
SY-155 12-22	22	DB5	
SY-155 12-23	23	DB4	
SY-155 12-24	24	DB3	
SY-155 12-25	25	DB2	
SY-155 12-26	26	DB1	
SY-155 12-27	27	DB0	
SY-155 12-28	28	GND	
SY-155 12-29	29	GND	
SY-155 12-30	30	GND	

CN3

GND	1	DSUB 37P-20	0
STOP CMD	2	DSUB 37P-21	1
FF CMD	3	DSUB 37P-22	2
PLAY CMD	4	DSUB 37P-23	3
REW CMD	5	DSUB 37P-24	4
STANDBY CMD	6	DSUB 37P-25	5
MONI CMD	7	DSUB 37P-26	6
REC CMD	8	DSUB 37P-27	7
IDNEXT CMD	9	DSUB 37P-28	8

CN4

IDLAST CMD	1	DSUB 37P-29	1
STID WR	2	DSUB 37P-30	2
SKID WR	3	DSUB 37P-31	3
ENDID WR	4	DSUB 37P-32	4
CHASE CMD	5	DSUB 37P-33	5
INS CHASE	6	DSUB 37P-34	6
INSST ON	7	DSUB 37P-35	7
EXT96 SEL	8	DSUB 37P-36	8

CN6

STOP STAT	1	DSUB 37P-2	1
FF STAT	2	DSUB 37P-3	2
PLAY STAT	3	DSUB 37P-4	3
REW STAT	4	DSUB 37P-5	4
STANDBY STAT	5	DSUB 37P-6	5
MONI STAT	6	DSUB 37P-7	6
REC STAT	7	DSUB 37P-8	7
ID SEARCH	8	DSUB 37P-9	8
STID STAT	9	DSUB 37P-11	9
SKID STAT	10	DSUB 37P-12	1
END STAT	11	DSUB 37P-13	2
CHASE STAT	12	DSUB 37P-14	3
SRV STAT	13	DSUB 37P-18	4
GND	14	DSUB 37P-1	5

CN7

+5V	1	DSUB 37P-19	1
EXT96	2	DSUB 37P-37	2
CUE REVS	3	DSUB 37P-15	3
SPEED A	4	DSUB 37P-16	4
SPEED B	5	DSUB 37P-17	5

CN6

L PLAY CMD	1	DIN 8P-1	3
L STOP CMD	2	DIN 8P-2	4
NC	3		
L PLAY STAT	4	DIN 8P-4	6
L STOP STAT	5	DIN 8P-5	7
RESERVED	6	DIN 8P-6	8
+5V	7	DIN 8P-7	2
GND	8	DIN 8P-8	0

CN8

+5V	1	DC-47 4-11	2
NC	2		
GND	3	DC-47 7-5	0

IF-283

OPTION FOR PCM-7050/7030
(DABK-7033)

CN2

DSR	1	DSUB 25P-6	3
DTR	2	DSUB 25P-20	4
RTS	3	DSUB 25P-4	5
CTS	4	DSUB 25P-5	7
TXD	5	DSUB 25P-2	8
RXD	6	DSUB 25P-3	9
GND	7	DSUB 25P-7	0
NC	8		

	CHASIS	1	FG	
8	IF-283 2-5	2	TXD	
9	IF-283 2-6	3	RXD	
5	IF-283 2-3	4	RTS	
7	IF-283 2-4	5	CTS	
3	IF-283 2-1	6	DSR	
0	IF-283 2-7	7	GND	
		8	NC	
		9	NC	
		10	NC	
		11	NC	
		12	NC	
		13	NC	
		14	NC	
		15	NC	
		16	NC	
		17	NC	
		18	NC	
		19	NC	
4	IF-283 2-2	20	DTR	
		21	NC	
		22	NC	
		23	NC	
		24	NC	
		25	NC	

(CHASIS)

0	RM-77 5-14	1	GND	
1	RM-77 5-1	2	STOP STAT	
2	RM-77 5-2	3	FF STAT	
3	RM-77 5-3	4	PLAY STAT	
4	RM-77 5-4	5	REW STAT	
6	RM-77 5-5	6	STANDBY STAT	
7	RM-77 5-6	7	MONI STAT	
8	RM-77 5-7	8	REC STAT	
9	RM-77 5-8	9	ID SEARCH	
		10	NC	
1	RM-77 5-9	11	STID STAT	
2	RM-77 5-10	12	SKID STAT	
3	RM-77 5-11	13	END STAT	
4	RM-77 5-12	14	CHASE STAT	
3	RM-77 7-3	15	CUE REVS	
4	RM-77 7-4	16	SPEED A	
5	RM-77 7-5	17	SPEED B	
6	RM-77 5-13	18	SRV STAT	
1	RM-77 7-1	19	+5V	
0	RM-77 3-1	20	GND	
1	RM-77 3-2	21	STOP CMD	
2	RM-77 3-3	22	FF CMD	
3	RM-77 3-4	23	PLAY CMD	
4	RM-77 3-5	24	REW CMD	
6	RM-77 3-6	25	STANDBY CMD	
7	RM-77 3-7	26	MONI CMD	
8	RM-77 3-8	27	REC CMD	
9	RM-77 3-9	28	IDNEXT CMD	
1	RM-77 4-1	29	IDLAST CMD	
2	RM-77 4-2	30	STID WR	
3	RM-77 4-3	31	SKID WR	
4	RM-77 4-4	32	ENDID WR	
6	RM-77 4-5	33	CHASE CMD	
7	RM-77 4-6	34	INS CHASE	
8	RM-77 4-7	35	INSST ON	
9	RM-77 4-8	36	EXT96 SEL	
2	RM-77 7-2	37	EXT96	

3	RM-77 6-1	1	L PLAY CMD	
4	RM-77 6-2	2	L STOP CMD	
		3	NC	
6	RM-77 6-4	4	L PLAY STAT	
7	RM-77 6-5	5	L STOP STAT	
8	RM-77 6-6	6	RESERVED	
2	RM-77 6-7	7	+5V	
0	RM-77 6-8	8	GND	

	CHASIS	1	FG	
2	CP-171 8-1	2	TXA	
3	CP-171 8-5	3	RXB	
4	CP-171 8-3	4	TXC	
		5	NC	
6	CP-171 8-4	6	RXC	
7	CP-171 8-2	7	TXB	
8	CP-171 8-6	8	RXA	
	CHASIS	9	FG	

(CHASIS)

FROM TO SY-155

MAIN HARNESS

C-143

C-144

A B C D E F G H

FRAME(3/4)

Serial No. UC 20001 to 37000
EK 50001 to 57000

CP-171

CN2

ADA-18 1-3	1	LINE 1 IN(G)	
ADA-18 1-2	2	LINE 1 IN(X)	
ADA-18 1-1	3	LINE 1 IN(Y)	
	4	NC	
ADA-18 3-3	5	LINE 2 IN(G)	
ADA-18 3-2	6	LINE 2 IN(X)	
ADA-18 3-1	7	LINE 2 IN(Y)	

CN4

ADA-18 5-3	1	LINE 1 OUT(G)	
ADA-18 5-2	2	LINE 1 OUT(X)	
ADA-18 5-1	3	LINE 1 OUT(Y)	
	4	NC	
	5	NC	
ADA-18 7-3	6	LINE 2 OUT(G)	
ADA-18 7-2	7	LINE 2 OUT(X)	
ADA-18 7-1	8	LINE 2 OUT(Y)	

CN6

ADA-18 9-1	1	MON 1 OUT(X)	
ADA-18 9-2	2	MON 1 OUT(G)	
ADA-18 9-3	3	MON 2 OUT(X)	
ADA-18 9-4	4	MON 2 OUT(G)	

CN7

SY-155 6-5	1	TXA	
SY-155 6-4	2	TXB	
SY-155 6-6	3	TXC	
SY-155 6-1	4	RXC	
SY-155 6-3	5	RXB	
SY-155 6-2	6	RXA	

CN9

TC-58 4-1	1	TC IN(G)	
TC-58 4-2	2	TC IN(X)	
TC-58 4-3	3	TC IN(Y)	
TC-58 4-4	4	TC OUT(G)	
TC-58 4-5	5	TC OUT(X)	
TC-58 4-6	6	TC OUT(Y)	
TC-58 3-1	7	VIDEO IN(X)	
TC-58 3-2	8	VIDEO IN(G)	
	9	NC	
TC-58 3-3	10	INT/EXT	
TC-58 3-4	11	GND	
	12	NC	

CN12

DIO-10 1-3	1	D IN(G)	
DIO-10 1-1	2	D IN(X)	
DIO-10 1-2	3	D IN(Y)	
DIO-10 1-5	4	D OUT(G)	
DIO-10 1-4	5	D OUT(X)	
DIO-10 1-6	6	D OUT(Y)	
DIO-10 2-1	7	WD IN(X)	
DIO-10 2-2	8	WD IN(G)	
	9	NC	
DIO-10 2-3	10	DI/WD	
DIO-10 2-4	11	GND	
DIO-10 2-5	12	WD OUT(X)	
DIO-10 2-6	13	WD OUT(G)	

CN1

LINE 1 IN(G)	1	SW-426 1-1	
LINE 1 IN(X)	2	SW-426 1-2	
LINE 1 IN(Y)	3	SW-426 1-3	
NC	4		
LINE 2 IN(G)	5	SW-426 1-4	
LINE 2 IN(X)	6	SW-426 1-5	
LINE 2 IN(Y)	7	SW-426 1-6	

CN3

LINE 1 OUT(G)	1	CP-172A 2-1	
LINE 1 OUT(X)	2	CP-172A 2-2	
LINE 1 OUT(Y)	3	CP-172A 2-3	
NC	4		
NC	5		
LINE 2 OUT(G)	6	CP-172B 2-1	
LINE 2 OUT(X)	7	CP-172B 2-2	
LINE 2 OUT(Y)	8	CP-172B 2-3	

CN5

MON 1 OUT(X)	1	CP-158 1-1	
MON 1 OUT(G)	2	CP-158 1-2	
MON 2 OUT(X)	3	CP-158 1-3	
MON 2 OUT(G)	4	CP-158 1-4	

CN8

TXA	1	DSUB 9P-2	
TXB	2	DSUB 9P-7	
TXC	3	DSUB 9P-4	
RXC	4	DSUB 9P-6	
RXB	5	DSUB 9P-3	
RXA	6	DSUB 9P-8	

CN10

TC IN(G)	1	CP-159A 2-1	
TC IN(X)	2	CP-159A 2-2	
TC IN(Y)	3	CP-159A 2-3	
TC OUT(G)	4	CP-159B 2-1	
TC OUT(X)	5	CP-159B 2-2	
TC OUT(Y)	6	CP-159B 2-3	
VIDEO IN(X)	7	CP-152 1-1	
VIDEO IN(G)	8	CP-152 1-2	
NC	9		
INT/EXT	10	SW-455 1-1	
GND	11	SW-455 1-2	
NC	12		

CN11

D IN(G)	1	CP-173A 2-1	
D IN(X)	2	CP-173A 2-2	
D IN(Y)	3	CP-173A 2-3	
D OUT(G)	4	CP-173B 2-1	
D OUT(X)	5	CP-173B 2-2	
D OUT(Y)	6	CP-173B 2-3	
WD IN(X)	7	SW-453 1-1	
WD IN(G)	8	SW-453 1-2	
NC	9		
DI/WD	10	SW-454 1-1	
GND	11	SW-454 1-2	
WD OUT(X)	12	SW-454 1-3	
WD OUT(G)	13	SW-454 1-4	

RM-77

CN1

SY-155 12-1	1	+5V	
SY-155 12-2	2	+5V	
SY-155 12-3	3	+5V	
SY-155 12-4	4	PCK/4	
SY-155 12-5	5	BAUDCLK	
SY-155 12-6	6	$\overline{IORD}$	
SY-155 12-7	7	$\overline{IOWR}$	
SY-155 12-8	8	$\overline{RESET}$	
SY-155 12-9	9	$\overline{RMINT}$	
SY-155 12-10	10	$\overline{IFINT}$	
SY-155 12-11	11	IFIEN	
SY-155 12-12	12	EXT96	
SY-155 12-13	13	AB7	
SY-155 12-14	14	AB6	
SY-155 12-15	15	AB5	
SY-155 12-16	16	AB4	
SY-155 12-17	17	AB3	
SY-155 12-18	18	AB2	
SY-155 12-19	19	AB1	
SY-155 12-20	20	DB7	
SY-155 12-21	21	DB6	
SY-155 12-22	22	DB5	
SY-155 12-23	23	DB4	
SY-155 12-24	24	DB3	
SY-155 12-25	25	DB2	
SY-155 12-26	26	DB1	
SY-155 12-27	27	DB0	
SY-155 12-28	28	GND	
SY-155 12-29	29	GND	
SY-155 12-30	30	GND	

CN2 CN1

+5V	1A	16A	+5V
+5V	1C	16C	+5V
+5V	2A	15A	+5V
+5V	2C	15C	+5V
PCK/4	3A	14A	PCK/4
BAUDCLK	3C	14C	BAUDCLK
$\overline{IORD}$	4A	13A	$\overline{IORD}$
$\overline{IOWR}$	4C	13C	$\overline{IOWR}$
$\overline{RESET}$	5A	12A	$\overline{RESET}$
$\overline{IFINT}$	5C	12C	$\overline{IFINT}$
IFCS1	6A	11A	IFCS1
IFCS3	6C	11C	IFCS3
IFCS2	7A	10A	IFCS2
D0	7C	10C	D0
A1	8A	9A	A1
D1	8C	9C	D1
A2	9A	8A	A2
D2	9C	8C	D2
A3	10A	7A	A3
D3	10C	7C	D3
NC	11A	6A	NC
D4	11C	6C	D4
NC	12A	5A	NC
D5	12C	5C	D5
IFCS5	13A	4A	IFCS5
D6	13C	4C	D6
IFCS4	14A	3A	IFCS4
D7	14C	3C	D7
GND	15A	2A	GND
GND	15C	2C	GND
GND	16A	1A	GND
GND	16C	1C	GND

CN3

GND	1	DSUB 37P-20	
$\overline{STOP\ CMD}$	2	DSUB 37P-21	
$\overline{FF\ CMD}$	3	DSUB 37P-22	
$\overline{PLAY\ CMD}$	4	DSUB 37P-23	
$\overline{REW\ CMD}$	5	DSUB 37P-24	
$\overline{STANDBY\ CMD}$	6	DSUB 37P-25	
$\overline{MONI\ CMD}$	7	DSUB 37P-26	
$\overline{REC\ CMD}$	8	DSUB 37P-27	
$\overline{IDNEXT\ CMD}$	9	DSUB 37P-28	

CN4

$\overline{IDLAST\ CMD}$	1	DSUB 37P-29	
$\overline{STID\ WR}$	2	DSUB 37P-30	
$\overline{SKID\ WR}$	3	DSUB 37P-31	
$\overline{ENDID\ WR}$	4	DSUB 37P-32	
$\overline{CHASE\ CMD}$	5	DSUB 37P-33	
$\overline{INS\ CHASE}$	6	DSUB 37P-34	
$\overline{INSST\ ON}$	7	DSUB 37P-35	
$\overline{EXT96\ SEL}$	8	DSUB 37P-36	

CN5

$\overline{STOP\ STAT}$	1	DSUB 37P-2	
$\overline{FF\ STAT}$	2	DSUB 37P-3	
$\overline{PLAY\ STAT}$	3	DSUB 37P-4	
$\overline{REW\ STAT}$	4	DSUB 37P-5	
$\overline{STANDBY\ STAT}$	5	DSUB 37P-6	
$\overline{MONI\ STAT}$	6	DSUB 37P-7	
$\overline{REC\ STAT}$	7	DSUB 37P-8	
$\overline{ID\ SEARCH}$	8	DSUB 37P-9	
$\overline{STID\ STAT}$	9	DSUB 37P-11	
$\overline{SKID\ STAT}$	10	DSUB 37P-12	
$\overline{END\ STAT}$	11	DSUB 37P-13	
$\overline{CHASE\ STAT}$	12	DSUB 37P-14	
$\overline{SRV\ STAT}$	13	DSUB 37P-18	
GND	14	DSUB 37P-1	

CN7

+5V	1	DSUB 37P-19	
EXT96	2	DSUB 37P-37	
CUE REVS	3	DSUB 37P-15	
SPEED A	4	DSUB 37P-16	
SPEED B	5	DSUB 37P-17	

CN6

L PLAY CMD	1	DIN 8P-1	
L STOP CMD	2	DIN 8P-2	
NC	3		
L PLAY STAT	4	DIN 8P-4	
L STOP STAT	5	DIN 8P-5	
RESERVED	6	DIN 8P-6	
+5V	7	DIN 8P-7	
GND	8	DIN 8P-8	

CN8

+5V	1	DC-47 4-11	
NC	2		
GND	3	DC-47 7-5	

IF-283

OPTION FOR PCM-7050/7030
(DABK-7033)

CN2

DSR	1	DSUB 25P-6	
DTR	2	DSUB 25P-20	
RTS	3	DSUB 25P-4	
CTS	4	DSUB 25P-5	
TXD	5	DSUB 25P-2	
RXD	6	DSUB 25P-3	
GND	7	DSUB 25P-7	
NC	8		

CHASIS	1	FG	
IF-283 2-5	2	TXD	
IF-283 2-6	3	RXD	
IF-283 2-3	4	RTS	
IF-283 2-4	5	CTS	
IF-283 2-1	6	DSR	
IF-283 2-7	7	GND	
	8	NC	
	9	NC	
	10	NC	
	11	NC	
	12	NC	
	13	NC	
	14	NC	
	15	NC	
	16	NC	
	17	NC	
	18	NC	
	19	NC	
IF-283 2-2	20	DTR	
	21	NC	
	22	NC	
	23	NC	
	24	NC	
	25	NC	

(CHASIS)

RM-77 5-14	1	GND	
RM-77 5-1	2	$\overline{STOP\ STAT}$	
RM-77 5-2	3	$\overline{FF\ STAT}$	
RM-77 5-3	4	$\overline{PLAY\ STAT}$	
RM-77 5-4	5	$\overline{REW\ STAT}$	
RM-77 5-5	6	$\overline{STANDBY\ STAT}$	
RM-77 5-6	7	$\overline{MONI\ STAT}$	
RM-77 5-7	8	$\overline{REC\ STAT}$	
RM-77 5-8	9	$\overline{ID\ SEARCH}$	
	10	NC	
RM-77 5-9	11	$\overline{STID\ STAT}$	
RM-77 5-10	12	$\overline{SKID\ STAT}$	
RM-77 5-11	13	$\overline{END\ STAT}$	
RM-77 5-12	14	$\overline{CHASE\ STAT}$	
RM-77 7-3	15	$\overline{CUE\ REVS}$	
RM-77 7-4	16	SPEED A	
RM-77 7-5	17	SPEED B	
RM-77 5-13	18	$\overline{SRV\ STAT}$	
RM-77 7-1	19	+5V	
RM-77 3-1	20	GND	
RM-77 3-2	21	$\overline{STOP\ CMD}$	
RM-77 3-3	22	$\overline{FF\ CMD}$	
RM-77 3-4	23	$\overline{PLAY\ CMD}$	
RM-77 3-5	24	$\overline{REW\ CMD}$	
RM-77 3-6	25	$\overline{STANDBY\ CMD}$	
RM-77 3-7	26	$\overline{MONI\ CMD}$	
RM-77 3-8	27	$\overline{REC\ CMD}$	
RM-77 3-9	28	$\overline{IDNEXT\ CMD}$	
RM-77 4-1	29	$\overline{IDLAST\ CMD}$	
RM-77 4-2	30	$\overline{STID\ WR}$	
RM-77 4-3	31	$\overline{SKID\ WR}$	
RM-77 4-4	32	$\overline{ENDID\ WR}$	
RM-77 4-5	33	$\overline{CHASE\ CMD}$	
RM-77 4-6	34	$\overline{INS\ CHASE}$	
RM-77 4-7	35	$\overline{INSST\ ON}$	
RM-77 4-8	36	$\overline{EXT96\ SEL}$	
RM-77 7-2	37	EXT96	

RM-77 6-1	1	L PLAY CMD	
RM-77 6-2	2	L STOP CMD	
	3	NC	
RM-77 6-4	4	L PLAY STAT	
RM-77 6-5	5	L STOP STAT	
RM-77 6-6	6	RESERVED	
RM-77 6-7	7	+5V	
RM-77 6-8	8	GND	

CHASIS	1	FG	
CP-171 8-1	2	TXA	
CP-171 8-5	3	RXB	
CP-171 8-3	4	TXC	
	5	NC	
CP-171 8-4	6	RXC	
CP-171 8-2	7	TXB	
CP-171 8-6	8	RXA	
CHASIS	9	FG	

(CHASIS)

FROM TO SY-155

MAIN HARNESS

C-143(a)

C-144(a)

A B C D E F G H

FRAME(3/4)

Serial No. UC 37001 and higher
EK 57001 and higher

CP-171

CN2

ADA-18 1-3	1	LINE 1 IN(G)	
ADA-18 1-2	2	LINE 1 IN(X)	
ADA-18 1-1	3	LINE 1 IN(Y)	
	4	NC	
ADA-18 3-3	5	LINE 2 IN(G)	
ADA-18 3-2	6	LINE 2 IN(X)	
ADA-18 3-1	7	LINE 2 IN(Y)	

CN4

ADA-18 5-3	1	LINE 1 OUT(G)	
ADA-18 5-2	2	LINE 1 OUT(X)	
ADA-18 5-1	3	LINE 1 OUT(Y)	
	4	NC	
	5	NC	
ADA-18 7-3	6	LINE 2 OUT(G)	
ADA-18 7-2	7	LINE 2 OUT(X)	
ADA-18 7-1	8	LINE 2 OUT(Y)	

CN6

ADA-18 9-1	1	MON 1 OUT(X)	
ADA-18 9-2	2	MON 1 OUT(G)	
ADA-18 9-3	3	MON 2 OUT(X)	
ADA-18 9-4	4	MON 2 OUT(G)	

CN7

SY-155 6-5	1	TXA	
SY-155 6-4	2	TXB	
SY-155 6-6	3	TXC	
SY-155 6-1	4	RXC	
SY-155 6-3	5	RXB	
SY-155 6-2	6	RXA	

CN9

TC-58 4-1	1	TC IN(G)	
TC-58 4-2	2	TC IN(X)	
TC-58 4-3	3	TC IN(Y)	
TC-58 4-4	4	TC OUT(G)	
TC-58 4-5	5	TC OUT(X)	
TC-58 4-6	6	TC OUT(Y)	
TC-58 3-1	7	VIDEO IN(X)	
TC-58 3-2	8	VIDEO IN(G)	
	9	NC	
TC-58 3-3	10	INT/EXT	
TC-58 3-4	11	GND	
	12	NC	

CN12

DIO-10 1-3	1	D IN(G)	
DIO-10 1-1	2	D IN(X)	
DIO-10 1-2	3	D IN(Y)	
DIO-10 1-6	4	D OUT(G)	
DIO-10 1-4	5	D OUT(X)	
DIO-10 1-5	6	D OUT(Y)	
DIO-10 2-1	7	WD IN(X)	
DIO-10 2-2	8	WD IN(G)	
	9	NC	
DIO-10 2-3	10	DI/WD	
DIO-10 2-4	11	GND	
DIO-10 2-5	12	WD OUT(X)	
DIO-10 2-6	13	WD OUT(G)	

CN1

LINE 1 IN(G)	1	CP-251 1-1	
LINE 1 IN(X)	2	CP-251 1-2	
LINE 1 IN(Y)	3	CP-251 1-3	
NC	4		
LINE 2 IN(G)	5	CP-251 1-5	
LINE 2 IN(X)	6	CP-251 1-6	
LINE 2 IN(Y)	7	CP-251 1-7	

CN3

LINE 1 OUT(G)	1	CP-251 2-1	
LINE 1 OUT(X)	2	CP-251 2-2	
LINE 1 OUT(Y)	3	CP-251 2-3	
NC	4		
NC	5		
LINE 2 OUT(G)	6	CP-251 2-6	
LINE 2 OUT(X)	7	CP-251 2-7	
LINE 2 OUT(Y)	8	CP-251 2-8	

CN5

MON 1 OUT(X)	1	CP-256 1-1	
MON 1 OUT(G)	2	CP-256 1-2	
MON 2 OUT(X)	3	CP-256 1-3	
MON 2 OUT(G)	4	CP-256 1-4	

CN8

TXA	1	CP-249 5-1	
TXB	2	CP-249 5-2	
TXC	3	CP-249 5-3	
RXC	4	CP-249 5-4	
RXB	5	CP-249 5-5	
RXA	6	CP-249 5-6	

CN10

TC IN(G)	1	CP-251 3-1	
TC IN(X)	2	CP-251 3-2	
TC IN(Y)	3	CP-251 3-3	
TC OUT(G)	4	CP-251 3-4	
TC OUT(X)	5	CP-251 3-5	
TC OUT(Y)	6	CP-251 3-6	
VIDEO IN(X)	7	CP-251 3-7	
VIDEO IN(G)	8	CP-251 3-8	
NC	9		
INT/EXT	10	CP-251 3-10	
GND	11	CP-251 3-11	
NC	12		

CN11

D IN(G)	1	CP-251 4-1	
D IN(X)	2	CP-251 4-2	
D IN(Y)	3	CP-251 4-3	
D OUT(G)	4	CP-251 4-4	
D OUT(X)	5	CP-251 4-5	
D OUT(Y)	6	CP-251 4-6	
WD IN(X)	7	CP-251 4-7	
WD IN(G)	8	CP-251 4-8	
NC	9		
DI/WD	10	CP-251 4-10	
GND	11	CP-251 4-11	
WD OUT(X)	12	CP-251 4-12	
WD OUT(G)	13	CP-251 4-13	

RM-77

CN1

SY-155 12-1	1	+5V	
SY-155 12-2	2	+5V	
SY-155 12-3	3	+5V	
SY-155 12-4	4	PCK/4	
SY-155 12-5	5	BAUDCLK	
SY-155 12-6	6	IORD	
SY-155 12-7	7	IOWR	
SY-155 12-8	8	RESET	
SY-155 12-9	9	RMINT	
SY-155 12-10	10	IFINT	
SY-155 12-11	11	IFIEN	
SY-155 12-12	12	EXT96	
SY-155 12-13	13	AB7	
SY-155 12-14	14	AB6	
SY-155 12-15	15	AB5	
SY-155 12-16	16	AB4	
SY-155 12-17	17	AB3	
SY-155 12-18	18	AB2	
SY-155 12-19	19	AB1	
SY-155 12-20	20	DB7	
SY-155 12-21	21	DB6	
SY-155 12-22	22	DB5	
SY-155 12-23	23	DB4	
SY-155 12-24	24	DB3	
SY-155 12-25	25	DB2	
SY-155 12-26	26	DB1	
SY-155 12-27	27	DB0	
SY-155 12-28	28	GND	
SY-155 12-29	29	GND	
SY-155 12-30	30	GND	

CN8

DC-47 4-11	1	+5V	
	2	NC	
DC-47 7-5	3	GND	

IF-283

OPTION FOR PGM-7050/7030
(DABK-7033)

CN2 CN1

+5V	1A	16A	+5V
+5V	1C	16C	+5V
+5V	2A	15A	+5V
+5V	2C	15C	+5V
PCK/4	3A	14A	PCK/4
BAUDCLK	3C	14C	BAUDCLK
IORD	4A	13A	IORD
IOWR	4C	13C	IOWR
RESET	5A	12A	RESET
IFINT	5C	12C	IFINT
IFCS1	6A	11A	IFCS1
IFCS3	6C	11C	IFCS3
IFCS2	7A	10A	IFCS2
D0	7C	10C	D0
A1	8A	9A	A1
D1	8C	9C	D1
A2	9A	8A	A2
D2	9C	8C	D2
A3	10A	7A	A3
D3	10C	7C	D3
NC	11A	6A	NC
D4	11C	6C	D4
NC	12A	5A	NC
D5	12C	5C	D5
IFCS5	13A	4A	IFCS5
D6	13C	4C	D6
IFCS4	14A	3A	IFCS4
D7	14C	3C	D7
GND	15A	2A	GND
GND	15C	2C	GND
GND	16A	1A	GND
GND	16C	1C	GND

CN2 CN6

DSR	1	1	DSR
DTR	2	2	DTR
RTS	3	3	RTS
CTS	4	4	CTS
TXD	5	5	TXD
RXD	6	6	RXD
GND	7	7	GND
NC	8	8	NC

FRAME GND

CP-249

CN10

FG	1	
TXD	2	
RXD	3	
RTS	4	
CTS	5	
DSR	6	
GND	7	
NC	8	
NC	9	
NC	10	
NC	11	
NC	12	
NC	13	
NC	14	
NC	15	
NC	16	
NC	17	
NC	18	
NC	19	
DTR	20	
NC	21	
NC	22	
NC	23	
NC	24	
NC	25	

FROM/TO D-SUB,25Pin

CN3 CN3

GND	1	1	GND
STOP CMD	2	2	STOP CMD
FF CMD	3	3	FF CMD
PLAY CMD	4	4	PLAY CMD
REW CMD	5	5	REW CMD
STANDBY CMD	6	6	STANDBY CMD
MONI CMD	7	7	MONI CMD
REC CMD	8	8	REC CMD
IDNEXT CMD	9	9	IDNEXT CMD

CN8-20
CN8-21
CN8-22
CN8-23
CN8-24
CN8-25
CN8-26
CN8-27
CN8-28

CN4 CN4

IDLAST CMD	1	1	IDLAST CMD
STID WR	2	2	STID WR
SKID WR	3	3	SKID WR
ENDID WR	4	4	ENDID WR
CHASE CMD	5	5	CHASE CMD
INS CHASE	6	6	INS CHASE
INSST ON	7	7	INSST ON
EXT96 SEL	8	8	EXT96 SEL

CN8-29
CN8-30
CN8-31
CN8-32
CN8-33
CN8-34
CN8-35
CN8-36

CN5 CN1

STOP STAT	1	1	STOP STAT
FF STAT	2	2	FF STAT
PLAY STAT	3	3	PLAY STAT
REW STAT	4	4	REW STAT
STANDBY STAT	5	5	STANDBY STAT
MONI STAT	6	6	MONI STAT
REC STAT	7	7	REC STAT
ID SEARCH	8	8	ID SEARCH
STID STAT	9	9	STID STAT
SKID STAT	10	10	SKID STAT
END STAT	11	11	END STAT
CHASE STAT	12	12	CHASE STAT
SRV STAT	13	13	SRV STAT
GND	14	14	GND

CN8-2
CN8-3
CN8-4
CN8-5
CN8-6
CN8-7
CN8-8
CN8-9
CN8-11
CN8-12
CN8-13
CN8-14
CN8-18
CN8-1

CN7 CN2

+5V	1	1	+5V
EXT96	2	2	EXT96
CUE REVS	3	3	CUE REVS
SPEED A	4	4	SPEED A
SPEED B	5	5	SPEED B

CN8-19
CN8-37
CN8-15
CN8-16
CN8-17

CN6 CN7

L PLAY CMD	1	1	L PLAY CMD
L STOP CMD	2	2	L STOP CMD
NC	3	3	NC
L PLAY STAT	4	4	L PLAY STAT
L STOP STAT	5	5	L STOP STAT
RESERVED	6	6	RESERVED
+5V	7	7	+5V
GND	8	8	GND

CN11

L PLAY CMD	1	
L STOP CMD	2	
NC	3	
L PLAY STAT	4	
L STOP STAT	5	
RESERVED	6	
+5V	7	
GND	8	

FROM/TO REMOTE 8Pin

CN5

CP-171 8-1	1	TXA	
CP-171 8-2	2	TXB	
CP-171 8-3	3	TXC	
CP-171 8-4	4	RXC	
CP-171 8-5	5	RXB	
CP-171 8-6	6	RXA	

CN9

FG	1	
TXA	2	
RXB	3	
TXC	4	
NC	5	
RXC	6	
TXB	7	
RXA	8	
FG	9	

FROM/TO REMOTE 9Pin

CN8

GND	1	
STOP STAT	2	
FF STAT	3	
PLAY STAT	4	
REW STAT	5	
STANDBY STAT	6	
MONI STAT	7	
REC STAT	8	
ID SEARCH	9	
NC	10	
STID STAT	11	
SKID STAT	12	
END STAT	13	
CHASE STAT	14	
CUE REVS	15	
SPEED A	16	
SPEED B	17	
NC	18	
SRV STAT	19	
+5V	20	
GND	21	
STOP CMD	22	
FF CMD	23	
PLAY CMD	24	
REW CMD	25	
STANDBY CMD	26	
MONI CMD	27	
REC CMD	28	
IDNEXT CMD	29	
IDLAST CMD	30	
STID WR	31	
SKID WR	32	
ENDID WR	33	
CHASE CMD	34	
INS CHASE	35	
INSST ON	36	
EXT96 SEL	37	

FROM/TO REMOTE 37Pin

CN1-14 CN1-1 CN1-2 CN1-3 CN1-4 CN1-5 CN1-6 CN1-7 CN1-8 CN1-9 CN1-10 CN1-11 CN1-12 CN2-3 CN2-4 CN2-5 CN1-13 CN2-1 CN3-1 CN3-2 CN3-3 CN3-4 CN3-5 CN3-6 CN3-7 CN3-8 CN3-9 CN4-1 CN4-2 CN4-3 CN4-4 CN4-5 CN4-6 CN4-7 CN4-8

FRAME GND

FROM TO SY-155

MAIN HARNESS

C-143(b)

C-144(b)

A B C D E F G H

FRAME(3/4)

HAS	1	FG
283	2	TXD
283 4-6	3	RXD
283 2-3	4	RTS
283 2-4	5	CTS
283	6	DSR
283	7	GND
	8	NC
	9	NC
	10	NC
	11	NC
	12	NC
	13	NC
	14	NC
	15	NC
	16	NC
	17	NC
	18	NC
	19	NC
83	20	DTR
	21	NC
	22	NC
	23	NC
	24	NC
	25	NC

77 8-14	1	GND
77 5-1	2	STOP STAT
77 5-5	3	FF STAT
77 5-	4	PLAY STAT
77 5	5	REW STAT
77 5	6	STANDBY STAT
77 5-6	7	MONI STAT
77 5-7	8	REC STAT
77 5-8	9	ID SEARCH
	10	NC
77 5-	11	STID STAT
77 5-	12	SKID STAT
77 5-11	13	END STAT
77 6-12	14	CHASE STAT
77 7-3	15	CUE REVS
77 7-	16	SPEED A
77 7-	17	SPEED B
77 6-	18	SRV STAT
77 7-1	19	+5V
77 3-1	20	GND
77 3-2	21	STOP CMD
77 3-	22	FF CMD
77 3-	23	PLAY CMD
77 3-	24	REW CMD
77 3-8	25	STANDBY CMD
77 3-7	26	MONI CMD
77 3-6	27	REC CMD
77 3-	28	IDNEXT CMD
77 4-	29	IDLAST CMD
77 4-	30	STID WR
77 4-3	31	SKID WR
77 4-4	32	ENDID WR
77 4-5	33	CHASE CMD
77 4-	34	INS CHASE
77 4-	35	INSST ON
77 4-	36	EXT96 SEL
77 7-2	37	EXT96

77 6-	1	L PLAY CMD
77 6-2	2	L STOP CMD
	3	NC
77 6-4	4	L PLAY STAT
77 6-5	5	L STOP STAT
77 6-6	6	RESERVED
77 6-7	7	+5V
77 6-8	8	GND

SIS	1	FG
77 8-1	2	TXA
77 8-	3	RXB
77 8-	4	TXC
	5	NC
77 8-	6	RXC
77 8-2	7	TXB
77 8-6	8	RXA
SIS	9	FG

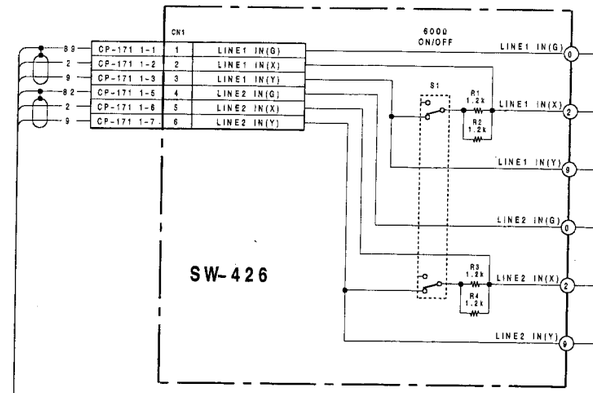

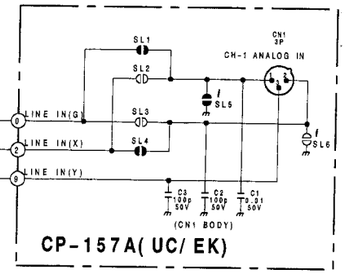

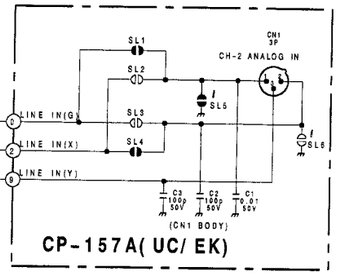

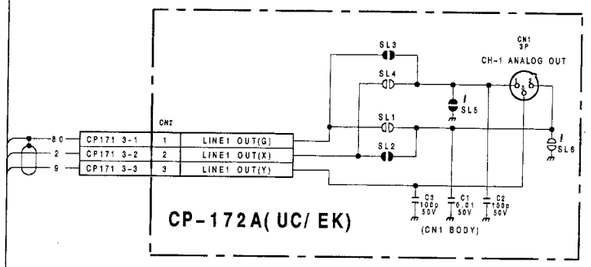

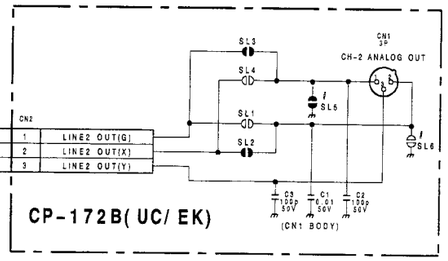

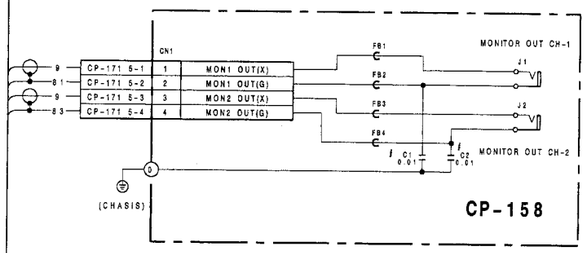

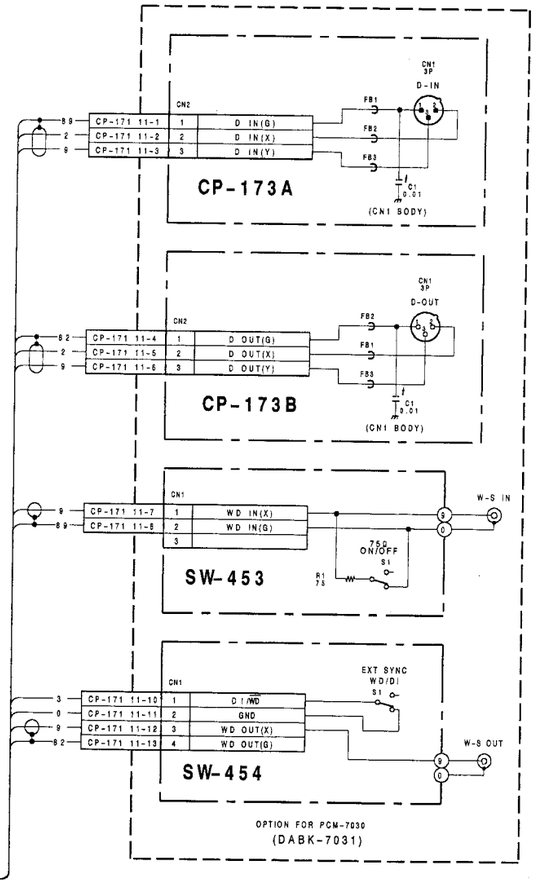

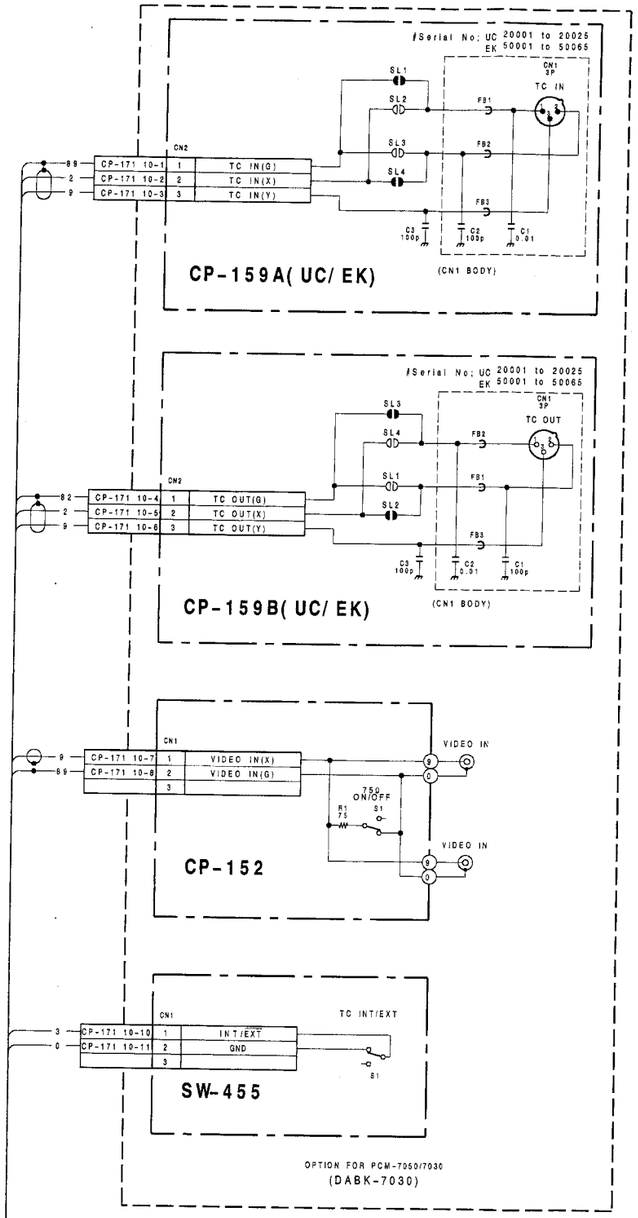

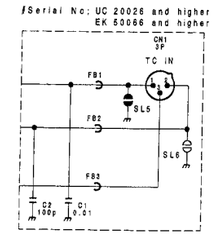

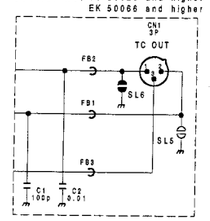

/:Changed information

Applied Serial No.	Parts that have been added.	Parts that have been deleted.
UC;20026 and higher EK;50066 and higher	SL5 SL6	C1(CP-158,CP-173A,CP-173B BOARD) C2(CP-158 BOARD)

FRAME(3/4)

MAIN HARNESS

C-145

C-146

I J K L M N O P

1 2 3 4 5

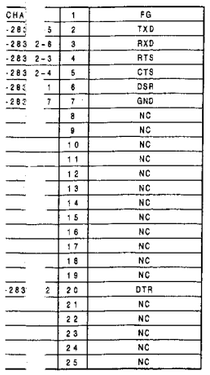

CHA	1	FG
-283 5	2	TXD
-283 2-8	3	RXD
-283 2-3	4	RTS
-283 2-4	5	CTS
-283 1	6	DSR
-282 7	7	GND
	8	NC
	9	NC
	10	NC
	11	NC
	12	NC
	13	NC
	14	NC
	15	NC
	16	NC
	17	NC
	18	NC
	19	NC
-283 2	20	DTR
	21	NC
	22	NC
	23	NC
	24	NC
	25	NC

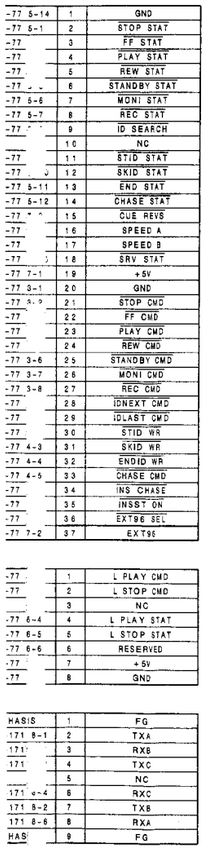

-77 5-14	1	GND
-77 5-1	2	STOP STAT
-77	3	FF STAT
-77	4	PLAY STAT
-77	5	REW STAT
-77	6	STANDBY STAT
-77 5-6	7	MONI STAT
-77 5-7	8	REC STAT
-77	9	ID SEARCH
-77	10	NC
-77	11	STID STAT
-77	12	SKID STAT
-77 5-11	13	END STAT
-77 5-12	14	CHASE STAT
-77	15	CUE REVS
-77	16	SPEED A
-77	17	SPEED B
-77	18	SRV STAT
-77 7-1	19	+5V
-77 3-1	20	GND
-77 3-9	21	STOP CMD
-77	22	FF CMD
-77	23	PLAY CMD
-77	24	REW CMD
-77 3-6	25	STANDBY CMD
-77 3-7	26	MONI CMD
-77 3-8	27	REC CMD
-77	28	IDNEXT CMD
-77	29	IDLAST CMD
-77	30	STID WR
-77 4-3	31	SKID WR
-77 4-4	32	ENDID WR
-77 4-5	33	CHASE CMD
-77	34	INS CHASE
-77	35	INSST ON
-77	36	EXT96 SEL
-77 7-2	37	EXT96

-77	1	L PLAY CMD
-77	2	L STOP CMD
	3	NC
-77 6-4	4	L PLAY STAT
-77 6-5	5	L STOP STAT
-77 6-6	6	RESERVED
-77	7	+5V
-77	8	GND

CHASIS	1	FG
-171 8-1	2	TXA
-171	3	RXB
-171	4	TXC
	5	NC
-171 8-4	6	RXC
-171 8-2	7	TXB
-171 8-8	8	RXA
CHASI	9	FG

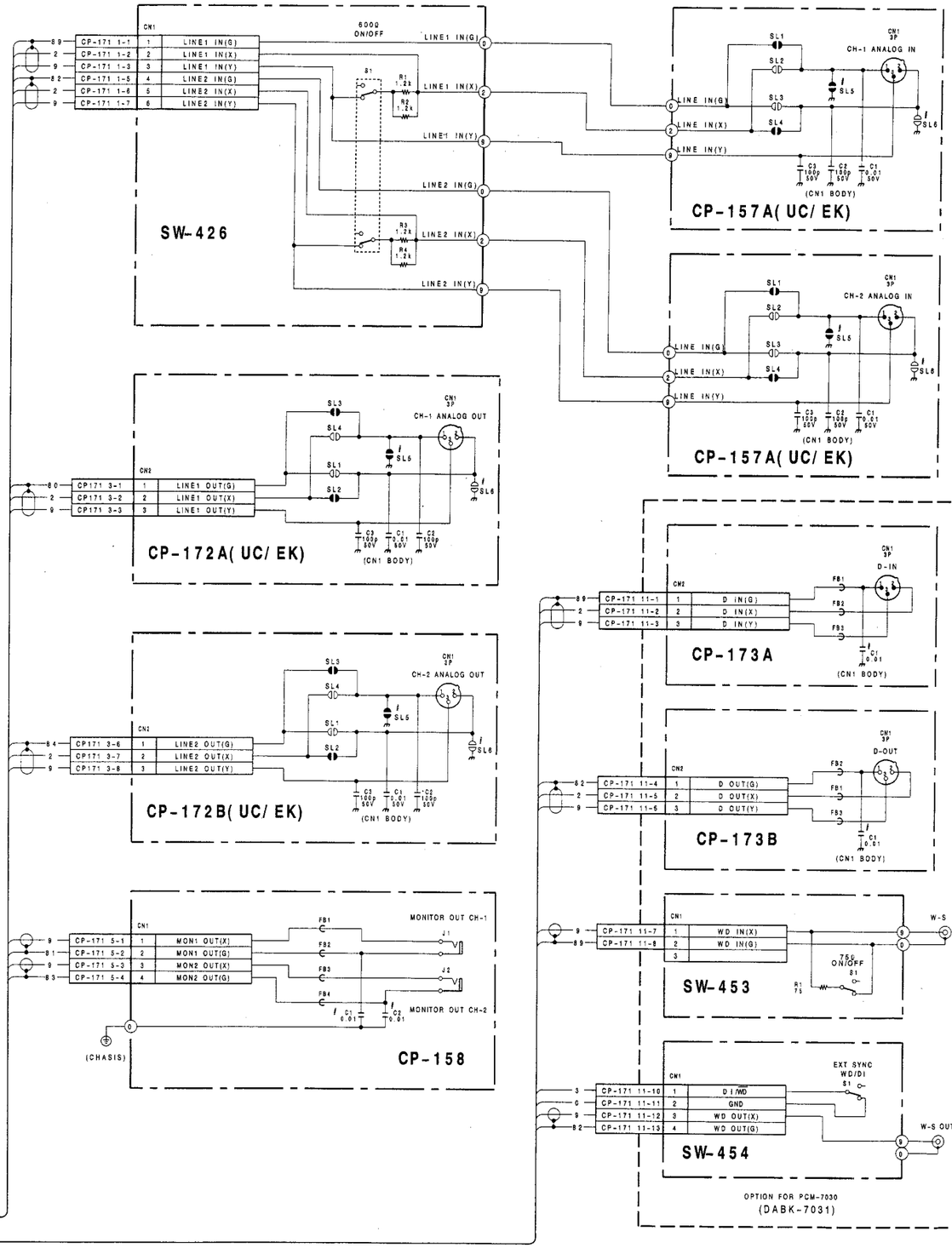

:Changed Information

Applied Serial No.	Parts that have been added.	Parts that have been deleted.
UC;20026 and higher EK;50066 and higher	SL5 SL6	C1(CP-158,CP-173A,CP-173B BOARD) C2(CP-158 BOARD)

CN10 — FROM/TO D-SUB,25Pin

CN8 — FROM/TO REMOTE 37Pin

CN11 — FROM/TO REMOTE 8Pin

CN9 — FROM/TO REMOTE 8Pin

CN1

CP-171 1-1	1	LINE 1 IN(G)	
CP-171 1-2	2	LINE 1 IN(X)	
CP-171 1-3	3	LINE 1 IN(Y)	
	4	NC	
CP-171 1-5	5	LINE 2 IN(G)	
CP-171 1-6	6	LINE 2 IN(X)	
CP-171 1-7	7	LINE 2 IN(Y)	

75Ω ON/OFF — R1 1.2k, R2 1.2k — S1 — CN7 CH-1 ANALOG IN, CH-2 ANALOG IN — SL1–SL12 — C1 100p, C2 100p, C3 0.01, C4 100p, C5 100p, C6 0.01

CN2

CP171 3-1	1	LINE 1 OUT(G)	
CP171 3-2	2	LINE 1 OUT(X)	
CP171 3-5	3	LINE 1 OUT(Y)	
	4	NC	
	5	NC	
CP171 3-6	6	LINE 2 OUT(G)	
CP171 3-7	7	LINE 2 OUT(X)	
CP171 3-8	8	LINE 2 OUT(Y)	

CN8 CH-1 ANALOG OUT, CH-2 ANALOG OUT — SL13–SL24 — C7 100p, C8 0.01, C9 100p, C10 100p, C11 0.01, C12 100p

CP-256

CN1

CP-171 5-1	1	MON1 OUT(X)	
CP-171 5-2	2	MON1 OUT(G)	
CP-171 5-3	3	MON2 OUT(X)	
CP-171 5-4	4	MON2 OUT(G)	

FB2, FB1, MONITOR OUT CH-1, J1 — FB4, FB3, MONITOR OUT CH-2, J2

CN3

CP-171 10-1	1	TC IN(G)	
CP-171 10-2	2	TC IN(X)	
CP-171 10-3	3	TC IN(Y)	
CP-171 10-4	4	TC OUT(G)	
CP-171 10-5	5	TC OUT(X)	
CP-171 10-6	6	TC OUT(Y)	
CP-171 10-7	7	VIDEO IN(X)	
CP-171 10-8	8	VIDEO IN(G)	
	9	NC	
CP-171 10-10	10	INT/EXT	
CP-171 10-11	11	GND	
	12	NC	

SL25–SL36 — CN9 TC IN — FB1–FB3 — C13 100p, C14 0.01, C15 100p — CN10 TC OUT — FB4–FB6 — C16 100p, C17 0.01, C18 100p

CN4

CP-171 11-1	1	D IN(G)	
CP-171 11-2	2	D IN(X)	
CP-171 11-3	3	D IN(Y)	
CP-171 11-4	4	D OUT(G)	
CP-171 11-5	5	D OUT(X)	
CP-171 11-6	6	D OUT(Y)	
CP-171 11-7	7	WD IN(X)	
CP-171 11-8	8	WD IN(G)	
	9	NC	
CP-171 11-10	10	D IN/WD	
CP-171 11-11	11	GND	
CP-171 11-12	12	WD OUT(X)	
CP-171 11-13	13	WD OUT(G)	

CN11 D IN — FB7–FB9 — CN12 D OUT — FB10–FB12

CN6

VIDEO IN(X)	1	
VIDEO IN(G)	2	
NC	3	
WD IN(X)	4	
WD IN(G)	5	
NC	6	
WD OUT(X)	7	
WD OUT(G)	8	

CN8

INT/EXT	1	
GND	2	
D IN/WD	3	
GND	4	

CP-251

CN1

1	VIDEO IN(X)	
2	VIDEO IN(G)	
3	NC	
4	WD IN(X)	
5	WD IN(G)	
6	NC	
7	WD OUT(X)	
8	WD OUT(G)	

75Ω ON/OFF — R1 75, S1 — CN3 VIDEO IN, VIDEO IN — 75Ω ON/OFF — R2 75, S2 — CN4 W-S IN, W-S OUT

CN2

1	INT/EXT	
2	GND	
3	D IN/WD	
4	GND	

S3 TC INT/EXT — S4 EXT SYNC D/WD

CP-250

MAIN HARNESS

FRAME(4/4)

FRAME(4/4)

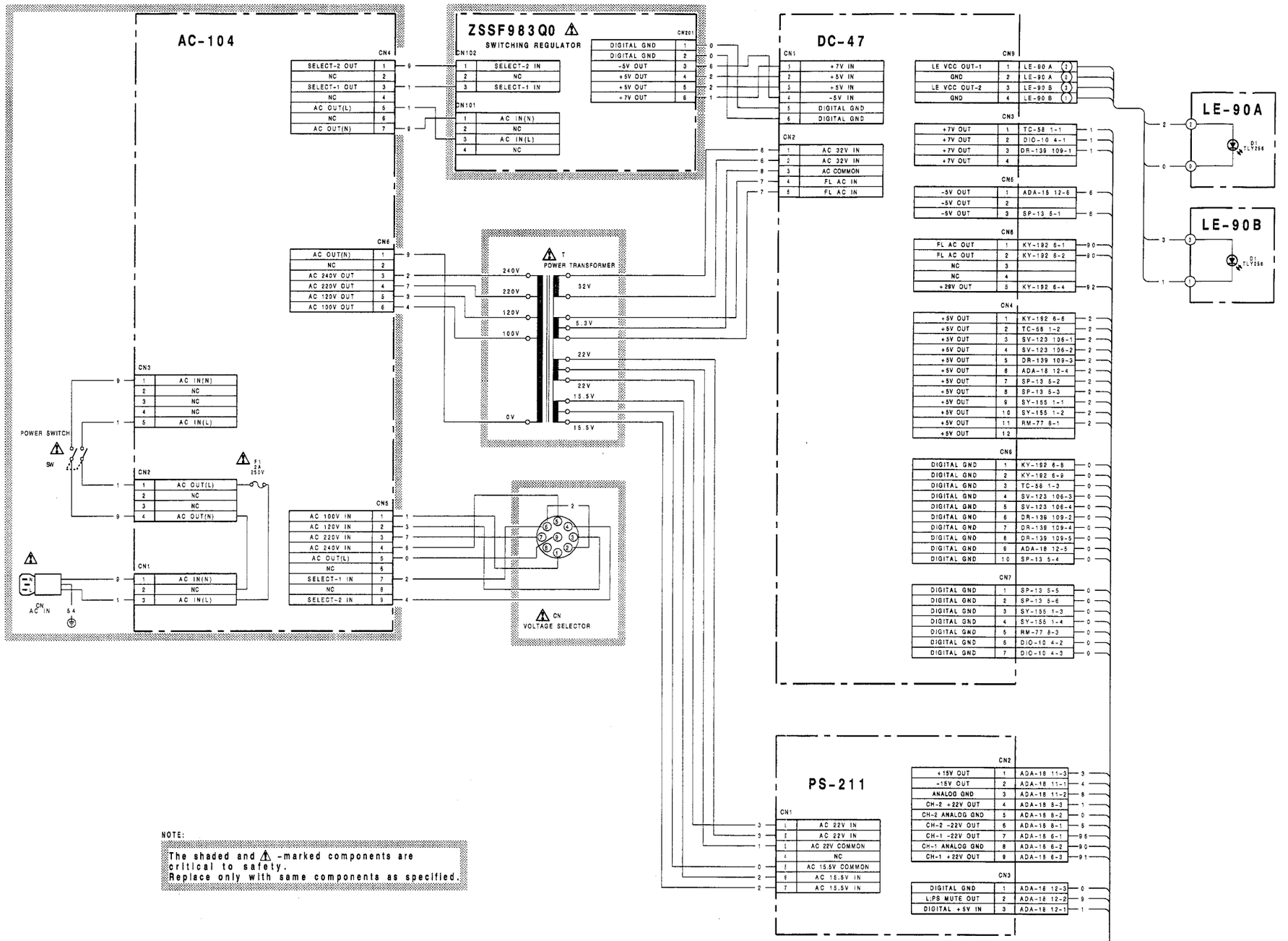

NOTE:

The shaded and ⚠ -marked components are critical to safety.
Replace only with same components as specified.

FRAME(4/4)

C-151

C-152

A B C D E F G H

1 2 3 4 5

SECTION D
SEMICONDUCTOR PIN ASSIGNMENTS

この章の図の中には互換性のないダイオード, トランジスタ, ICが併記されていることがあります。部品を交換をするときには必ず部品表を参照して下さい。
等価回路はICメーカーのData Bookに従いました。

The chart in this section may sometimes show diodes, transistors, and ICs that are not interchangeable. When replacing a component, be sure to refer to the parts list. The circuit diagram of each IC is obtained from the IC data book published by the manufacturer.

IC	PAGE
AM26LS31CNS	D-2
AM26LS32ACNS	D-2
AM27C010-150DC	D-2
AM27C010-155DC	D-2
AM27C256-150DC	D-3
AM27C256-155DC	D-3
CS5326-KP	D-3
CX20174	D-4
CX23065A	D-4
CXA1046M	D-4
CXA1364R	D-5
CXA1418N	D-5
CXD1008Q	D-6
CXD1009Q	D-7
CXD1052Q-Z	D-8
CXD1147Q	D-9
CXD1160AP	D-10
CXD8130Q	D-10
CXD8134Q	D-11
CXD8139AQ	D-12
CXD8141Q	D-13
CXD8163AQ	D-14
CXD8184AQ	D-16
CXD8185AQ	D-18
CXD8139M	D-19
CXK58257AM-10LL	D-20
HD14053BFP	D-20
LM358PS	D-20
LM393PS	D-20
M5219L	D-20
MB3763PF	D-21
MC14053BF	D-20
MC14066BF	D-21
MC1648P	D-21
MC34051P	D-21
MC4044P	D-21
MC74HC86AF	D-22
MS62256CLL-10FC	D-20
MSC62408	D-22
MSM6338MS-K	D-23
NE5532P	D-24
PALCE16V8H-25PC	D-24
PCM61P-S-2	D-24
RC4556S	D-24
RC7805FA	D-24
RC7815FA	D-24
RC7818FA	D-24
RC78L05A	D-24
RC7905FA	D-24
RC7915FA	D-24
RC7918FA	D-24
SM5813APS	D-25
SN74HC00AN	D-25
SN74HC00ANS	D-25
SN74HC04AN	D-25
SN74HC04ANS	D-25
SN74HC08ANS	D-25
SN74HC125ANS	D-25
SN74HC126NS	D-26
SN74HC138ANS	D-26
SN74HC14ANS	D-26
SN74HC161AN	D-26
SN74HC175ANS	D-26
SN74HC245ANS	D-27
SN74HC32ANS	D-27
SN74HC540ANS	D-27
SN74HC541ANS	D-27
SN74HC573BNS	D-27
SN74HC574ANS	D-27
SN74HC74AN	D-28
SN74HC74ANS	D-28
SN74HC86ANS	D-22
SN74HCU04ANS	D-25
SN74LS03NS	D-28
SN75121N	D-28
SN75124N	D-28
TC74HC123AF	D-28
TC74HC4051AF	D-28
TC74HC4052AF	D-28
TC74HC574F	D-27
TC74HC86AF	D-22
TD62381P	D-29
TL431CPS	D-29
TL7705ACPS	D-29
TL7705CPS-B	D-29
TLC272CPS	D-29
TLC274CNS	D-29
TMP82C79P-2	D-30
TMS44C256-10SDL	D-31
UPC78L05	D-31
UPD43256AGU-10LL	D-31
UPD4702G	D-32
UPD70216L-10	D-32
UPD71051GB-10-3B4	D-33
UPD71054GB-10-3B4	D-34
UPD71059GB-10-3B4	D-34
UPD78C11ACW-F08	D-35

TRANSISTOR	PAGE
2SA1162Y	D-36
2SA1242	D-36
2SA985A	D-36
2SB1040A	D-36
2SB906	D-36
2SC2275A	D-36
2SC2458	D-36
2SC2712Y	D-36
2SC2855	D-36
2SD1020	D-36
2SD1221	D-36
2SD1266	D-36
2SD773	D-36
2SK170	D-36
DTA114EK	D-36
DTA124ES	D-36
DTA143EK	D-36
DTA143TK	D-36
DTC124EK	D-36
DTC124ES	D-36
DTC143TK	D-36
DTC143TS	D-36
PS2604	D-36

DIODE	PAGE
10E-2	D-37
10E2N	D-37
1S2837	D-37
1SS119	D-37
BR3432S	D-37
EBG3432S	D-37
EBG5734S	D-37
ERA81-004	D-37
ERC81-004	D-37
FC52M	D-37
FC53M	D-37
GL-3HY8	D-37
HZ ? ? A ?	D-37
HZS ? ? L	D-37
PY3432S	D-37
PY5734S	D-37
RD ? ? EB ?	D-37
RD ? ? ESB ?	D-37
RK14	D-37
SLR-34PG5	D-37
TLG124A	D-37
TLR124	D-37
TLUG164	D-37
TLUR164	D-37
TLUY164	D-37
TLY256	D-37

AM26LS31CNS (TI) FLAT PACKAGE

HIGH SPEED DIFFERENTIAL LINE DRIVER
– TOP VIEW –

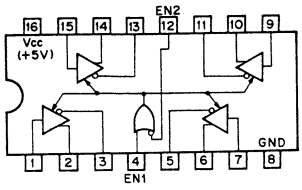

FUNCTION TABLE		
EN2	EN1	OUTPUT
0	0	ENABLE
0	1	ENABLE
1	0	HI-Z
1	1	ENABLE

0 ; LOW LEVEL
1 ; HIGH LEVEL
HI-Z ; HIGH IMPEDANCE

AM26LS32ACNS (TI) FLAT PACKAGE

HIGH SPEED DIFFERENTIAL LINE RECEIVER
– TOP VIEW –

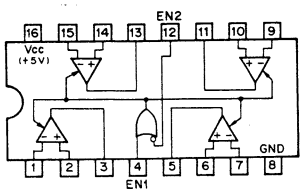

FUNCTION TABLE		
EN2	EN1	OUTPUT
0	0	ENABLE
0	1	ENABLE
1	0	HI-Z
1	1	ENABLE

0; LOW LEVEL
1; HIGH LEVEL
HI-Z; HIGH IMPEDANCE

	SENSE	INPUT VOLT
LS32	±200mV	±7V
LS33	±500mV	±15V

AM27C010-150DC (AMD)
AM27C010-155DC (AMD)

C-MOS 1M (131072x8)-BIT EPROM
– TOP VIEW –

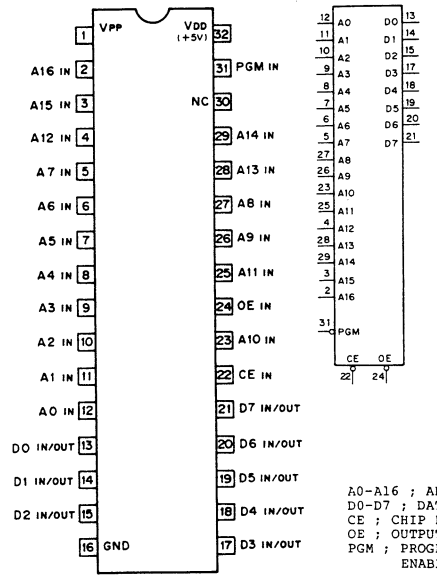

A0-A16 ; ADDRESS INPUTS
D0-D7 ; DATA INPUTS/OUTPUTS
CE ; CHIP ENABLE INPUT
OE ; OUTPUT ENABLE INPUT
PGM ; PROGRAM INPUT/OUTPUT ENABLE INPUT

READ MODE (V_{DD}=+5V, V_{PP}=+5V)

OE	CE	PGM	A0-A16	D0-D7	FUNCTION
0	0	1	A IN	D OUT	ACTIVE
X	1	X	X	HI-Z	STANDBY
1	0	X	A IN	HI-Z	OUTPUT DISABLE
X	0	0	A IN		

0; LOW LEVEL
1; HIGH LEVEL
X; DON'T CARE
HI-Z; HIGH-IMPEDANCE

PROGRAM MODE (V_{DD}=+6V, V_{PP}=+12.5V)

MODE	OE	CE	PGM	A0 - A16	D0-D7	FUNCTION
1-BYTE PROGRAM MODE	1	0	0	A IN	D IN	PROGRAM
	0	0	1	A IN	D OUT	VERIFY
	1	0	1	A IN	HI-Z	PROGRAM INHIBIT
	1	1	1	A IN	D IN	PROGRAM DATA INPUT
4-BYTE PROGRAM MODE	0	1	0	A0,A1 ; X A2-A16; A IN	HI-Z	PROGRAM
	0	0	1	A IN	D OUT	VERIFY
	0	1	1	A IN	HI-Z	PROGRAM INHIBIT

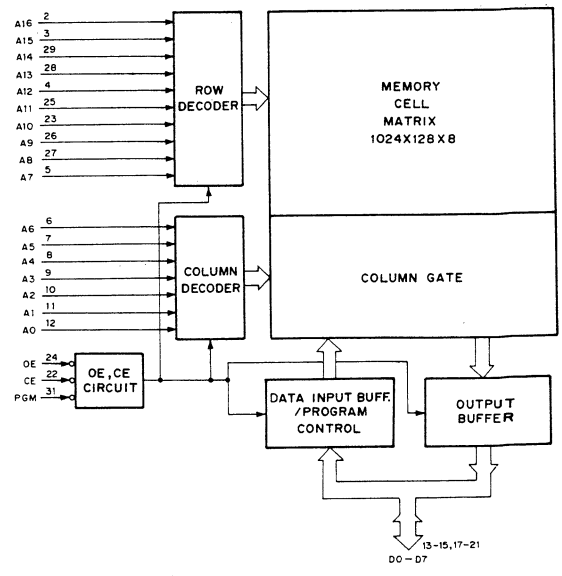

AM27C256-150DC (AMD)
AM27C256-155DC (AMD)

C-MOS 256K (32Kx8)-BIT UV ERASABLE PROM WITH 3-STATE OUTPUTS
– TOP VIEW –

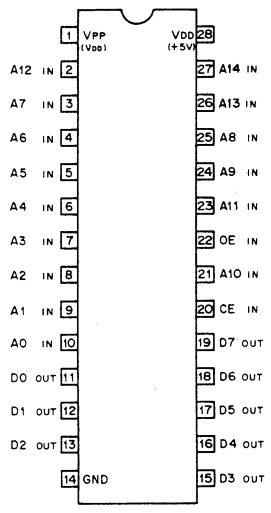

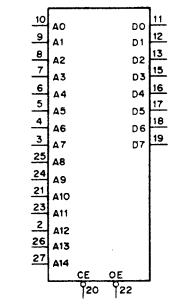

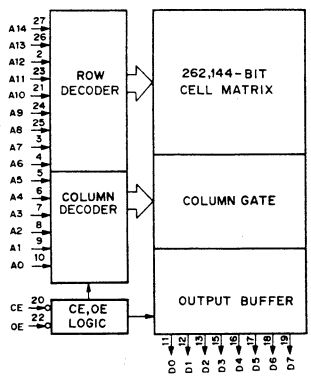

A0 – A14 ; ADDRESS INPUTS
CE ; CHIP ENABLE INPUT
D0 – D7 ; OUTPUT INPUTS
OE ; OUTPUT ENABLE INPUT
V_{PP} ; PROGRAM POWER SUPPLY

An	CE	OE	VDD	Vpp	Dn	FUNCTION
An	0	0	+5V	+5V	DOUT	READ
An	0	1	+5V	+5V	HI-Z	OUTPUT DISABLE
X	1	X	+5V	+5V	HI-Z	STANDBY
An	0	1	+6V	+12.5V	DIN	PGM
An	1	0	+6V	+12.5V	DOUT	PGM VERIFY(1)
An	0	0	+6V	+12.5V	DOUT	PGM VERIFY(2)
X	1	1	+6V	+12.5V	HI-Z	PGM INH
A0	0	0	+5V	+5V	DEVICE CODE	ELECTRONIC SIGNATURE*

0:LOW LEVEL
1:HIGH LEVEL
X:DON'T CARE
HI-Z:HIGH IMPEDANCE

*SEE FOLLOWING DESCRIPTION.

ELECTRONIC SIGNATURE FOR P ROM WRITER

ADDRESS SETTINGS IN READ MODE

A1 – A8	A9	A10 – A13	A14, Vpp
0	12V	0	1

	CODE DATA								
	A0	D7	D6	D5	D4	D3	D2	D1	DO	
MAKER CODE	0	0	0	0	0	0	1	0	0	04H
DEVICE CODE	1	0	1	1	0	0	0	1	0	62H

CS5326-KP (ASAHIKASEI)

16-BIT OVERSAMPLING STEREO A/D CONVERTER
– TOP VIEW –

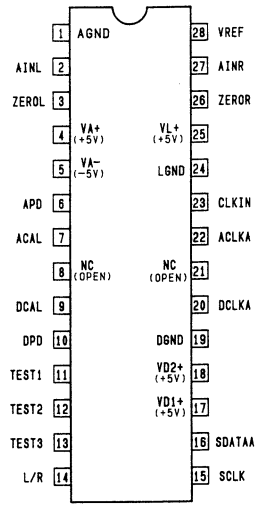

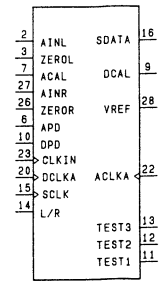

A GND ;ANALOG GROUND
D GND ;DIGITAL GROUND
VA + ;Vcc FOR ANALOG
VA – ;VEE FOR ANALOG
VD1 + ;Vcc FOR DIGITAL
VD2 + ;Vcc FOR DIGITAL
VL ;Vcc FOR DIGITAL

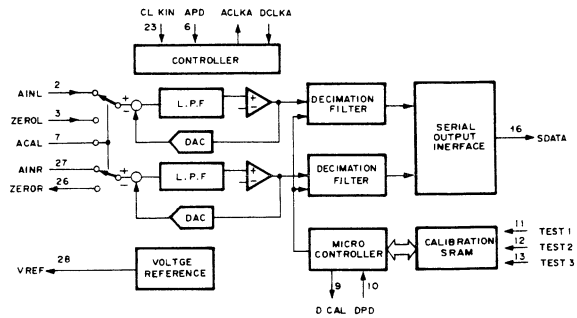

INPUT

ACAL ; ANALOG CALIBRATION NORMALLY, CONNECT TO DCAL PIN.
AINL ; L CHANNEL ANALOG INPUT
AINR ; R CHANNEL ANALOG INPUT
APD ; ANALOG POWER DOWN
(H = POWER DOWN MODE) NORMALLY, CONNECT TO DPD PIN.
CLKIN ; MASTER CLOCK
DCLKA ; DIGITAL SYSTEM CLOCK
CONNECT TO ACLKA PIN.
DPD ; DIGITAL POWER DOWN (H = POWER DOWN MODE)
L/R ; INPUT CHANNEL SELECTION
DATA CHANNEL OUTPUT FROM SDATA PIN IS SELECTED.
(H = L CHANNEL DATA, L = R CHANNEL DATA)
SCLK ; SERIAL DATA OUTPUT CLOCK
TST1~TST3 ; TEST (CONNECT TO DGND)
ZEROL ; L CHANNEL ZERO LEVEL INPUT
ZEROR ; R CHANNEL ZERO LEVEL INPUT

OUTPUT

ACLKA ; ANALOG SYSTEM CLOCK (CONNECT TO DCLKA PIN.)
DCAL ; DIGITAL CALIBRATION
SDATA ; SERIAL DATA OUTPUT
DATA IS OUTPUT IN ORDER FROM MSB IN 2ND COMPLEMENT.
VREF ; REFERENCE VOLTAGE SUPPLY OF –3.6V

CX20174 (SONY)

THREE-PHASE LINEAR BSL MOTOR DRIVE
– TOP VIEW –

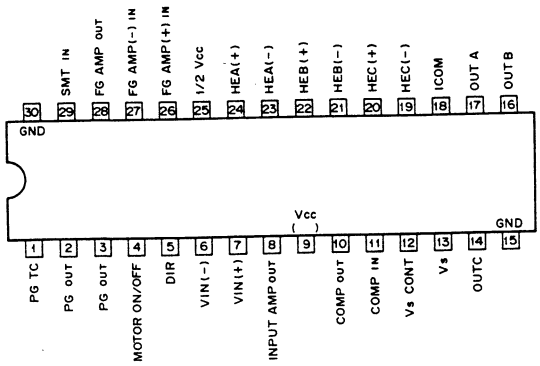

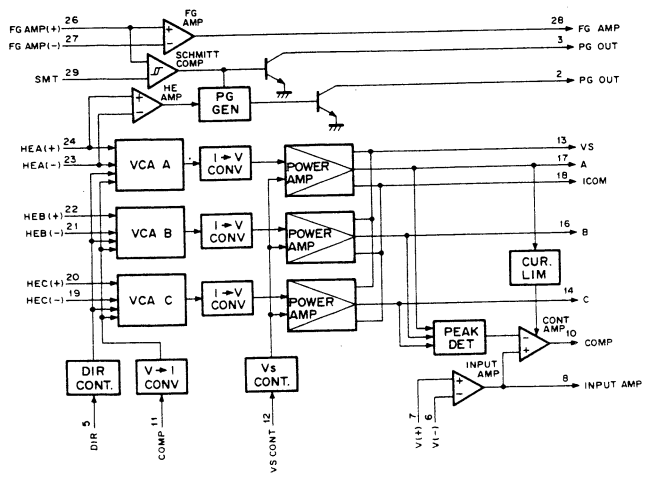

CX23065A (SONY)

N-MOS PHASE COMPARATOR WITH INVERSION AMPLIFIER
– PRINTED SIDE VIEW –

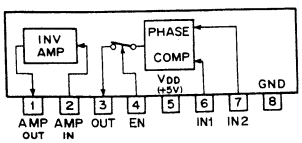

EN	OUT
1	ACTIVE
0	HIGH IMPEDANCE

1; HIGH LEVEL
0; LOW LEVEL

TIMING CHART

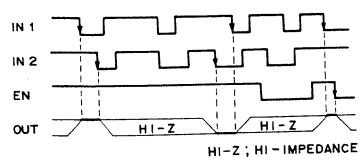

HI-Z ; HI-IMPEDANCE

CXA1046M (SONY)

ATF FOR R-DAT
– TOP VIEW –

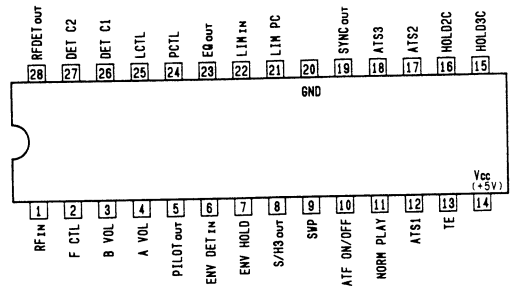

INPUT

A VOL	;RESISTOR AND BY-PASS CAPACITOR CONNECTION FOR ADJUSTING ACH GAIN OF THE GAIN CONTROL AMPLIFIER
ATF ON/OFF	;ATF BLOCK ON/OFF (L:ON)
ATS1-ATS3	;SAMPLE PULSE INPUT FOR SAMPLE AND HOLD
ENV DET IN	;ENVELOPE DETECTOR INPUT
LIM IN	;LIMITER INPUT
LIM PC	;BYPASS CAPACITOR FOR LIMITER BLOCK
NORM PLAY	;DETERMINES IF NORMAL MODE(L:NORMAL MODE)
RF IN	;RF INPUT
SWP	;ACH/BCH SELECT CONTROL OF PROCESS SIGNAL (H:BCH, L:ACH)

OUTPUT

EQ OUT	;ATF SYNC EQUALIZER OUTPUT
PILOT OUT	;PILOT SIGNAL OUTPUT
RF DET OUT	;RF DETECTOR OUTPUT
S/H 3 OUT	;SAMPLE HOLD 3 OUTPUT
SYNC OUT	;ATF SYNC OUTPUT
TE	;TRACKING ERROR OUTPUT

OTHERS

B VOL	;RESISTOR AND BY-PASS CAPACITOR CONNECTION FOR ADJUSTING BCH GAIN OF THE GAIN CONTROL AMPLIFIER
DET C1	;CAPACITOR CONNECTION FOR SMOOTHING FILTER TO DETERMINE THE RF DETECTOR THRESHOLD LEVEL
DET C2	;EXTERNAL CAPACITOR CONNECTION FOR RF ENVELOPE WAVEFORM ADJUSTMENT
ENV HOLD	;ENVELOPE DETECTOR HOLD CAPACITOR CONNECTION
F CTL	;EXTERNAL RESISTOR CONNECTION FOR DECIDING THE PILOT FILTER (L.P.F)
LCTL	;EXTERNAL RESISTOR CONNECTION FOR DECIDING THE SYNC EQUALIZER LOW RANG
PCTL	;EXTERNAL RESISTOR CONNECTION FOR DECIDING THE SYNC EQUALIZER PHASE
HOLD2C	;EXTERNAL HOLD CAPACITOR CONNECTION FOR SAMPLE AND HOLD 2
HOLD3C	;EXTERNAL HOLD CAPACITOR CONNECTION FOR SAMPLE AND HOLD 3

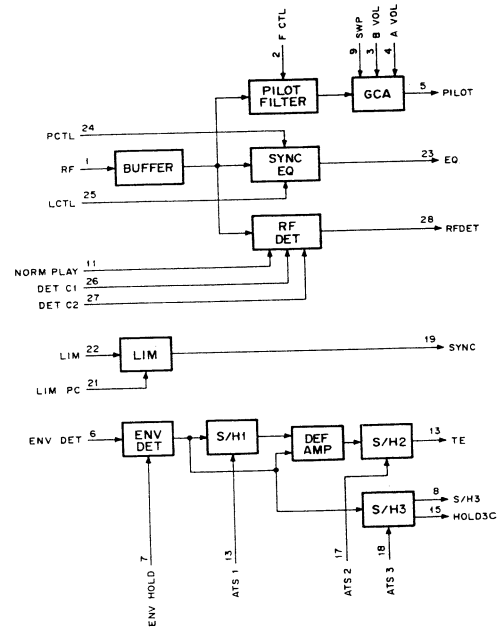

CXA1364R (SONY)

REC/PB AMP FOR R-DAT
– TOP VIEW –

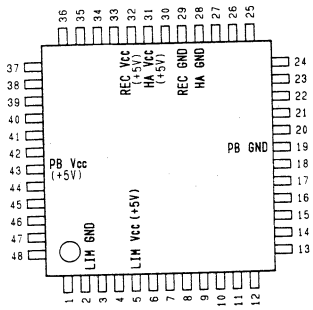

(Vcc = + 5V)

PIN No.	I/O	SIGNAL	PIN No.	I/O	SIGANL	PIN No.	I/O	SIGNAL	PIN No.	I/O	SIGNAL
1	O	LIM OUT	13	O	PLT OUT	25	–	B PC	37	O	A HA OUT
2	–	LIM GND	14	I	GCA CTL	26	I	B HA IN	38	–	SAG TC
3	I	MOD1 IN	15	–	EQ PHASE	27	O	B RA OUT	39	–	A R PCM
4	I	MOD2 IN	16	–	EQ Q	28	–	HA GND	40	–	B R PCM
5	–	LIM Vcc	17	–	EQ HIGH	29	–	REC GND	41	–	A R PLT
6	O	ENV OUT	18	–	EQ LOW	30	I	REC BIAS	42	–	B R PLT
7	–	ENV COMP	19	–	PB GND	31	–	HA Vcc	43	–	PB Vcc
8	–	ENV PEAK	20	I	EQ IN	32	–	REC Vcc	44	I	REDT IN
9	I	LIM IN	21	O	SWA OUT	33	O	A RA OUT	45	I	REPB IN
10	O	EQ OUT	22	O	V REG	34	I	A HA IN	46	I	PIPC IN
11	O	P EV OUT	23	O	B HA OUT	35	–	A PC	47	I	SWP IN
12	I	P ENV IN	24	–	B LPC	36	–	A LPC	48	I	NRM HLF

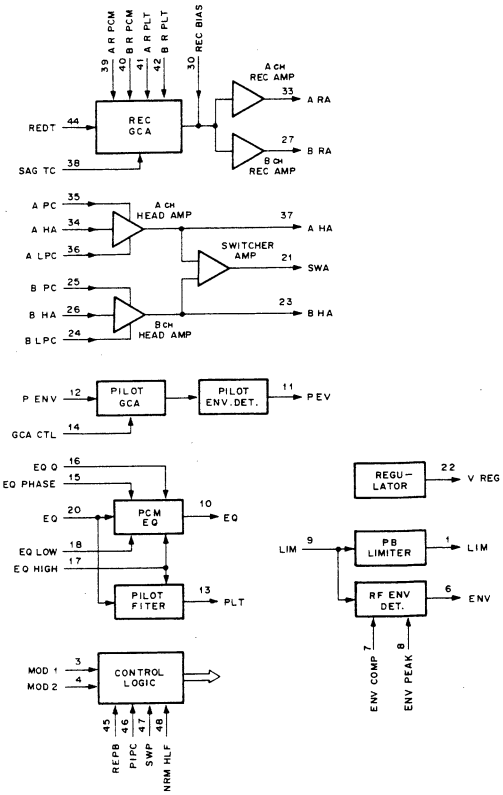

INPUT

A HA IN	; Ach HEAD AMPLIFIER INPUT
B HA IN	; Bch HEAD AMPLIFIER INPUT
EQ IN	; PCM EQ INPUT
GCA CTL	; PILOT GCA GAIN CONTROL VOLTAGE INPUT
LIM IN	; PB LIMITER AND RF ENVELOPE DETECTOR INPUT
MOD1 IN, MOD2 IN	; OPERATION MODE SWITCHING LOGIC INPUT
NRM HLF	; NORMAL/HALF SPEED SWITCHING SIGNAL INPUT
P ENV IN	; PILOT GCA INPUT
PIPC IN	; PCM/PILOT REC AREA SWITCHING SIGNAL INPUT
REC BIAS	; REC FINAL STAGE CURRENT AMPLIFIER INPUT
REDT IN	; REC SIGNAL INPUT
REPB IN	; REC/PB SWITCHING SIGNAL INPUT
SWP IN	; A/B SWITCHING SIGNAL INPUT

OUTPUT

A HA OUT	; Ach HEAD AMPLIFIER OUTPUT
A RA OUT	; Ach REC AMPLIFIER OUTPUT
B HA OUT	; Bch HEAD AMPLIFIER OUTPUT
B RA OUT	; Bch REC AMPLIFIER OUTPUT
ENV OUT	; RF ENVELOPE DETECTOR OUTPUT
EQ OUT	; PCM EQUALIZER OUTPUT
LIM OUT	; PB LIMITER OUTPUT
P EV OUT	; PILOT ENVELOPE OUTPUT
PLT OUT	; PILOT FILTER OUTPUT
SWA OUT	; SWITCH AMPLIFIER OUTPUT
V REG	; REGULATOR OUTPUT

OTHERS

A LPC	; CONNECTION PIN FOR SMOOTHING CAPACITOR OF Ach HEAD AMPLIFIER DC SERVO
A PC	; CONNECTION PIN FOR EMITTER BYPASS CAPACITOR OF Ach HEAD AMPLIFIER FIRST STAGE GROUNDED EMITTER TRANSISTOR
A R PCM	; CONNECTION PIN FOR RESISTOR DETERMINING Ach REC CURRENT
A R PLT	; CONNECTION PIN FOR RESISTOR DETERMINING, ALONG WITH RESISTOR OF PIN 39, Ach PILOT SIGNAL REC CURRENT
B LPC	; CONNECTION PIN FOR DC SMOOTHING CAPACITOR OF Bch HEAD AMPLIFIER DC SERVO
B PC	; CONNECTION PIN FOR EMITTER BYPASS CAPACITOR OF Bch HEAD AMPLIFIER FIRST STAGE GROUNDED EMITTER TRANSISTOR
B R PCM	; CONNECTION PIN FOR RESISTOR DETERMINING Bch REC CURRENT
B R PLT	; CONNECTION PIN FOR RESISTOR DETERMINING, ALONG WITH RESISTOR OF PIN 40, Bch PILOT SIGNAL REC CURRENT
ENV COMP	; FOR CONTROLLING RF ENVELOPE THRESHOLD VOLTAGE
ENV PEAK	; CONNECTION PIN OF THE CAPACITOR FOR RF PEAK HOLD
EQ HIGH	; RESISTOR OR CURRENT SOURCE IS CONNECTED FOR DETERMINING PCM EQ HIGH BAND PEAK FREQUENCY AND PILOT FILTER CUT OFF FREQUENCY.
EQ LOW	; RESISTOR OR CURRENT SOURCE IS CONNECTED FOR DETERMINING PCM EQ LOW BAND CHARACTERISTIC.
EQ PHASE	; RESISTOR OR CURRENT SOURCE IS CONNECTED FOR DETERMINING PCM EQ PHASE CHARACTERISTIC.
EQ Q	; RESISTOR OR CURRENT SOURCE IS CONNECTED FOR DETERMINING PCM EQ HIGH BAND PEAK GAIN.
SAG TC	; CONNECTION PIN FOR CAPACITOR CORRECTING THE REC WAVEFORM SAG

CXA1418N (SONY)

SENSOR AMPLIFIER FOR R-DAT
– TOP VIEW –

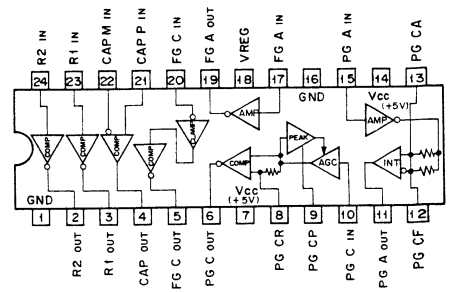

CXD1008Q (SONY)

C-MOS R-DAT SIGNAL PROCESSING (ERROR CORRECTION)
– TOP VIEW –

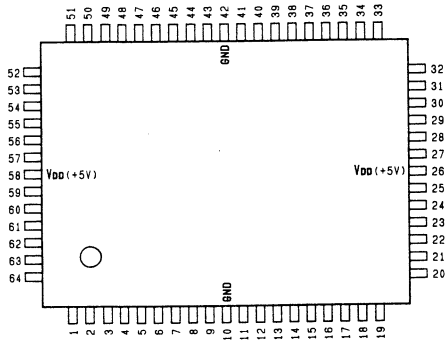

PIN No.	I/O	SIGNAL	PIN No.	I/O	SIGNAL	PIN No.	I/O	SIGNAL	PIN No.	I/O	SIGNAL
1	I	$\overline{RST}$	17	I/O	LR03	33	I/O	CTL1	49	O	A2
2	I	TST1	18	I/O	DFCK	34	I/O	EXCK	50	O	A1
3	O	PHCO	19	I/O	DIOC	35	I/O	STAT	51	O	A0
4	I	TST2	20	O	DADT	36	I/O	SBSY	52	O	PRGE
5	I	DALF	21	O	ERRF	37	I/O	SRVS	53	O	PTRD
6	I/O	VCOI	22	I	ADDT	38	I	ADAE	54	O	RW
7	I	ADLF	23	I/O	XBCK	39	I/O	FLGC	55	I	$\overline{DOE}$
8	I	XT2I	24	I/O	BCK	40	I	CKRS	56	I/O	D7
9	O	XT2O	25	I/O	WCK	41	I	CLKI	57	I/O	D6
10	–	GND	26	–	VDD	42	–	GND	58	–	VDD
11	I	XT3I	27	I/O	LRCK	43	I	PREN	59	I/O	D5
12	O	XT3O	28	I	FSEN	44	I/O	RCPB	60	I/O	D4
13	I	AUDR	29	I	MUTG	45	I/O	PRGS	61	I/O	D3
14	I/O	MNTG	30	I/O	PIDN	46	I/O	C1C2	62	I/O	D2
15	I/O	LR01	31	I/O	PIUP	47	O	A4	63	I/O	D1
16	I/O	LR02	32	I/O	CTL2	48	O	A3	64	I/O	D0

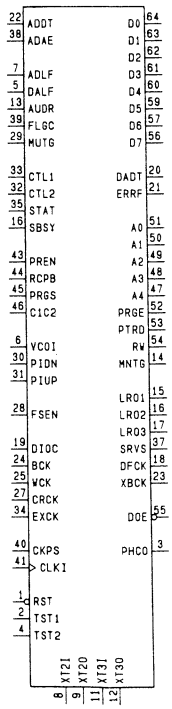

INPUT

ADAE	;INDICATES THAT DATA BUS IS OCCUPIED BY AD AND DA.
ADDT	;AD DATA (REC DATA) INPUT
ADLF	;SELECTS LSB FIRST OR MSB FIRST OF AD DATA INPUT. ('H':LSB FIRST)
AUDR	;SELECTS WHETHER THE PLAYBACK DATA IS AUDIO DATA. ('H':AUDIO DATA)
C1C2	;SELECTS C1 CODE/C2 CODE OF ECC. ('H':C1)
CKRS	;MASTER CLOCK RESET SIGNAL
CLKI	;MASTER CLOCK (18.816 MHz)
CTL1,2	;STATUS DATA SHIFT IN ENABLE SIGNAL
DALF	;SELECTS LSB FIRST OR MSB FIRST OF DA DATA OUTPUT. ('H':LSBFIRST)
EXCK	;STATUS SHIFT IN CLOCK.
FLGC	;CONTROLS FORCIBLY ERROR FLAG, ERASURE CORRECTION PROHIBIT AND MUTING BY TIME SHARING.
FSEN	;SPECIFIES OUTPUT OR NOT OF DFCK, DIOC, BCK, WCK AND LRCK. 'H';OUTPUT
MUTG	;MUTING CONTROL SIGNAL INPUT. 'H';MUTE ON
PIDN	;PITCH DOWN CONTROL.
PIUP	;PITCH UP CONTROL.
PREN	;ECC DATA INPUT/OUTPUT REQUEST INHIBIT SIGNAL.
PRGS	;ECC PROGRAM START.
RCPB	;SELECTS REC MODE/PB OF ECC. ('H':REC MODE)
SBSY	;STATUS LOAD CLOCK.
STAT	;STATUS SHIFT IN DATA INPUT
TST1	;TEST PIN. NORMALLY FIXED TO 'L'.
TST2	;TEST PIN. NORMALLY FIXED TO 'L'.
VCOI	;VCO INPUT.
$\overline{DOE}$	;READ/WRITE SWITCHING OUTPUT ENABLE SIGNAL. 'L';OUTPUT.
RST	;RESET SIGNAL. 'L';RESET.
XT2I	;CRYSTAL INPUT (22.5792 MHz).
XT3I	;CRYSTAL INPUT (24.576 MHz).

OUTPUT

A0–A4	;ECC DATA ADDRESS (A0 TO A4 INDICATES CODE LOCATION)
DADT	;DA DATA (PLAYBACK DATA OR REC MONITOR DATA) OUTPUT
DFCK	;256 fs OUTPUT. FSEN='H';OUTPUT. (TRISTATE)
ERRF	;DA DATA ERROR FLAG OUTPUT. ('H';ERROR)
LR01	;15 BCK DELAYED SIGNAL OF LRCK
LR02	;16 BCK DELAYED SIGNAL OF LRCK
LR03	;'H' AND 'L' INVERSION SIGNAL OF LR02
MNTG	;'H';INDICATES THAT ERROR MONITOR BEING OUTPUT TO D7 TO D0
PHCO	;PHASE COMPARISON OUTPUT FOR VARIABLE PITCH (TRISTATE)
PRGE	;ECC DATA ADDRESS (INVERSION EACH ONE CODE PROCESSING)
PTRD	;ERROR POINTER/CODE DATA SWITCHING. 'H';POINTER IS R/W.
RW	;READ/WRITE SWITCHING. ('H':READ)
SRVS	;SERVO REFERENCE SIGNAL (12.8 kHz)
XBCK	;'H' AND 'L' INVERSION SIGNAL OF BCK
XT2O	;CRYSTAL OUTPUT
XT3O	;CRYSTAL OUTPUT

INPUT/OUTPUT

BCK	;64Fs INPUT/OUTPUT. FSEN='H';OUTPUT
D0–D7	;DATA BUS INPUT/OUTPUT. (D7=MSB, D0=LSB)
DIOC	;128Fs INPUT/OUTPUT. FSEN='H';OUTPUT
LRCK	;Fs INPUT/OUTPUT. FSEN='H';OUTPUT
WCK	;2Fs INPUT/OUTPUT. FSEN='H';OUTPUT

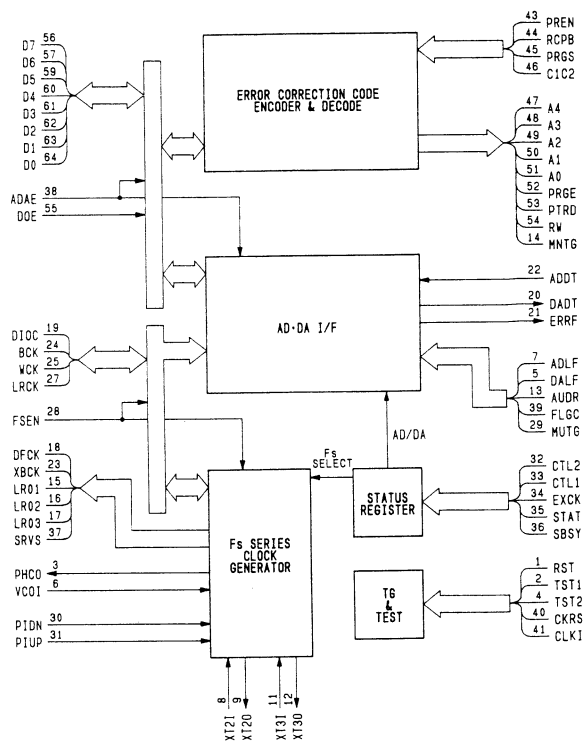

CXD1009Q (SONY)

C-MOS SIGNAL PROCESSING (RAM CONTROL) FOR R-DAT
– TOP VIEW –

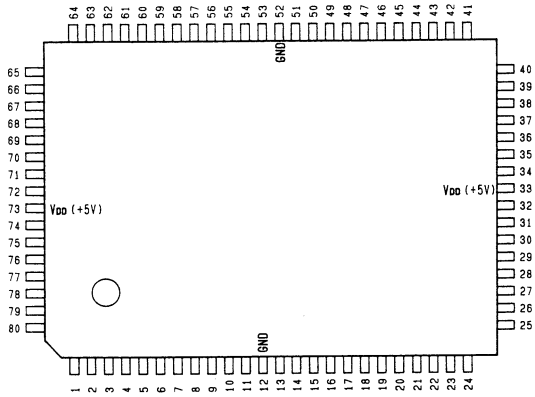

PIN No.	I/O	SIGNAL	PIN No.	I/O	SIGNAL	PIN No.	I/O	SIGNAL	PIN No.	I/O	SIGNAL
1	I	PTRD	21	I	SWP	41	O	PHCO	61	I/O	AD05
2	I	PRGE	22	I	DPG	42	I	TEST	62	I/O	AD06
3	I	ECA0	23	O	SVRF	43	I	VCOI	63	I/O	AD07
4	I	ECA1	24	I	RSEL	44	O	VCOO	64	I/O	AD08
5	I	ECA2	25	O	SBSY	45	I	CKOE	65	I/O	AD09
6	I	ECA3	26	I/O	SBDT	46	I	PBDT	66	O	AD10
7	I	ECA4	27	I	EXCK	47	I	YCLR	67	O	AD11
8	O	C1C2	28	I	DTC1	48	O	REDT	68	O	AD12
9	O	PRGS	29	I	DTC2	49	O	REPB	69	O	AD13
10	O	ECRP	30	I	LRCK	50	O	XTIO	70	I/O	D0
11	O	PREN	31	I	WCK	51	I	XTII	71	I/O	D1
12	–	GND	32	I/O	EXSY	52	–	GND	72	I/O	D2
13	I/O	CLKO	33	–	VDD	53	O	XEAN	73	–	VDD
14	O	CSET	34	O	ATD2	54	O	XWE	74	I/O	D3
15	O	FLCT	35	O	ATD1	55	O	XOE	75	I/O	D4
16	O	DARE	36	I	ATSY	56	I/O	AD00	76	I/O	D5
17	I	SRVS	37	O	ATS3	57	I/O	AD01	77	I/O	D6
18	O	C94M	38	O	ATS2	58	I/O	AD02	78	I/O	D7
19	O	PLCK	39	O	ATS1	59	I/O	AD03	79	O	DE
20	O	CRCM	40	I	RFSFO	60	I/O	AD04	80	I	RW

INPUT

ATSY	; DATA SIGNAL AFTER ATF EQ
CKOE	; CLKO PIN I/O CONTROL (Fch CLOCK INPUT/OUTPUT SWITCHING) (L : Fch CLOCK OUT, H : Fch CLOCK EXTERNAL INPUT)
DPG	; PG SIGNAL INPUT PIN (REFERENCE = FALLING EDGE)
DTC1 – DTC2	; SBDT MODE DESIGNATION SIGNAL
ECA0 – ECA4	; ECC LOCATION ADDRESS (ECA0 = LSB, ECA4 = MSB)
EXCK	; SBDT INPUT/OUTPUT CLOCK
LRCK	; Lch/Rch DISCRIMINATION SIGNAL OF AD/DA DATA (SAME FREQUENCY CLOCK AS FS) (Lch : L, Rch : H)
PBDT	; RF PLAYBACK SIGNAL
PRGE	; ECC PROGRAM END SIGNAL
PTRD	; POINTER READ SIGNAL
RFSF	; RF ENVELOPE DETECT SIGNAL
RSEL	; RAM SELECT PIN (SRAM : L, DRAM : H)
RW	; ECC DATA READ/WRITE DISCRIMINATION SIGNAL (READ : H, WRITE : L)
SRVS	; DRUM FG REFERENCE SIGNAL (12.8K)
SWP	; TRACK DISCRIMINATION OF + AZIMUTH AND – AZIMUTH (+ AZIMUTH : L, – AZIMUTH : H)
TEST	; LSI TEST PIN (NORMAL : L, TEST : H)
VCOI	; VCO INPUT PIN
WCK	; 1 WORD (= 16 bit) DISCRIMINATION REFERENCE SIGNAL (2 × FS) OF AD/DA DATA
XCLR	; LSI TEST PIN (NORMALLY FIXED TO H.)
XT1I	; CRYSTAL CONNECTION PIN

OUTPUT

ATD1	; OFF TRACK DETECTION SIGNAL (WHEN PB ; OFF : H, ON : L, WHEN REC ; FIXED TO L)
ATD2	; DISCRIMINATION SIGNAL OF ATF PILOT SIGNAL (130kHz) (WHEN ALL REC (130kHz) : H, WHEN OTHER THAN ALL REC : FIXED TO L)
ATS1 – ATS3	; ATF PILOT SIGNAL DETECTION SAMPLING PULSE (WHEN PB ; SAMPLING : H, HOLD : L, WHEN REC : FIXED TO L)
C1C2	; C1/C2 DISCRIMINATION SIGNAL (C1 : H, C2 : L)
C94M	; 9.408MHz CRYSTAL CLOCK
CRCM	; CRC DETECTION RESULT (OK : H, NG : L)
CSET	; Fch/SYSTEM CLOCK (4.704MHz) SYNCHRONIZATION RESET SIGNAL
DARE	; INDICATES THAT AD/DA SYSTEM HAS PRIORITY TO USE OF THE DATA BUS.
DE	; 08 DATA OUTPUT SYNC ENABLE SIGNAL
ECRP	; ECC ENCODE/DECODE SWITCHING SIGNAL (ENCODE : H, DECODE : L)
FLCT	; DISCRIMINATION SIGNAL (TIME DIVISION) FOR FORCED INTERPOLATION, C2 ERASURE FORBID, 0 CROSS MUTE, etc.
PHCO	; PHASE COMPARATOR OUTPUT PIN
PLCK	; PLL CLOCK EXTRACTED FROM PBDT SIGNAL
PREN	; ECC RAM ACCESS ENABLE SIGNAL
PRGS	; ECC PROGRAM START SIGNAL
REDT	; RF REC SIGNAL
REPB	; REC/PB SWITCHING SIGNAL OF RF AMPLIFIER (REC : H, PB : L)
SBSY	; SUBCODE DATA I/O TIMING REFERENCE SIGNAL (OTHER THAN SEARCH = DUTY 50)
SVRF	; DRUM SERVO REFERENCE SIGNAL (100/3Hz) (DUTY 50)
VCOO	; VCO OUTPUT PIN
XEAN	; EXTERNAL RAM ACCESS TIMING SIGNAL
XOE	; RAM OUTPUT ENABLE SIGNAL
XT1O	; CRYSTAL CONNECTION PIN
XWE	; RAM WRITE ENABLE SIGNAL

INPUT/OUTPUT

AD00 – AD13	; ADDRESS BUS (AD0 = LSB, AD13 = MSB)
CLKO	; Fch CLOCK (18.816MHz)
D0 – D7	; DATA BUS (D0 = LSB, D7 = MSB)
EXSY	; EXTERNAL SYSTEM SYNC SIGNAL (DUTY 50)
SBDT	; SERIAL I/O PORT FOR SUBCODE DATA, STATUS INFORMATION, etc.

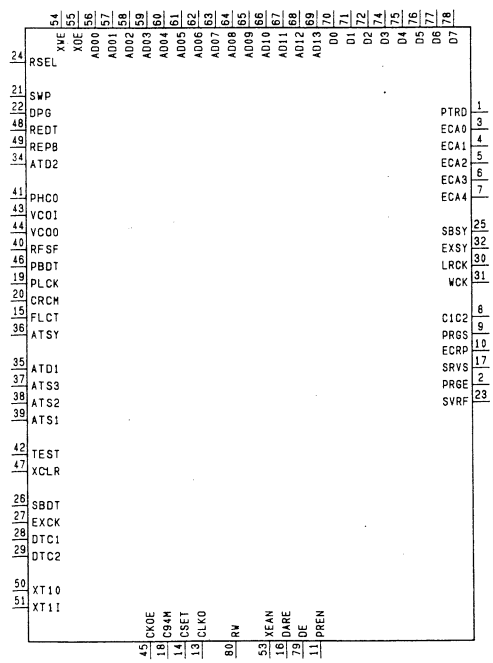

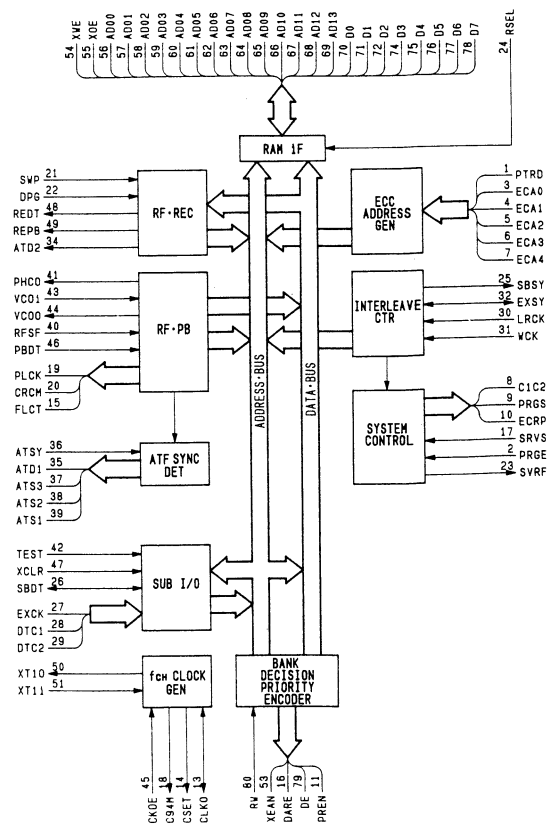

CXD1052Q-Z (SONY)

C-MOS SERVO CONTROL FOR R-DAT
– TOP VIEW –

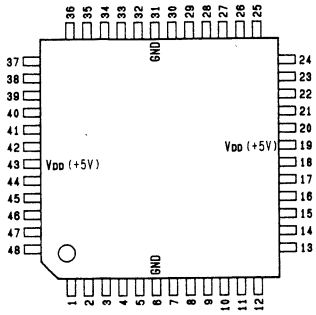

Pin NO.	I/O	SIGNAL	Pin NO.	I/O	SIGNAL	Pin NO.	I/O	SIGNAL	Pin NO.	I/O	SIGNAL
1	I	94M	13	O	SPPW	25	I	TIN1	37	O	DBRK
2	I	128K	14	O	PHPW	26	I	ARST	38	O	TOU1
3	I	CLR	15	O	BSPW	27	I	DON	39	O	TOU2
4	O	PCOT	16	O	CREF	28	I	TIN3	40	I	TIN5
5	I	DVS2	17	I	RFDT	29	O	TOU3	41	I	DREF
6	–	GND	18	O	RFW	30	O	TOU4	42	I	TST2
7	I	CFG	19	–	VDD	31	–	GND	43	–	VDD
8	O	JTSP	20	I	TST1	32	I/O	TIO2	44	I	DPG
9	O	CFGO	21	I/O	TIO1	33	O	ALM	45	O	SWP
10	I	DVS1	22	I	C16	34	I	VAR	46	O	PLLK
11	I	DFG	23	O	JSTL	35	I	REW	47	I	CRC
12	I	LPG	24	I	TIN4	36	I	SER	48	I	RPCK

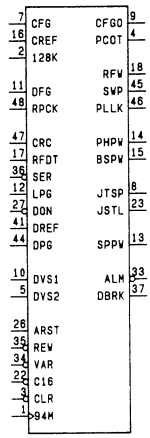

INPUT

128K	; SERVO REFERENCE INPUT (12.8kHz)
94M	; MASTER CLOCK INPUT (9.408MHz)
$\overline{ARST}$	; ALARM RELEASE INPUT AT SEARCH (RELEASE WHEN L)
$\overline{C16}$	; CAPSTAN MODE SWITCHING (x16 MODE WHEN L)
CFG	; CAPSTAN FREQUENCY GENERATOR INPUT
$\overline{CLR}$	; RESET INPUT (RESET WHEN L)
CRC	; CYCLIC REDUNDANCY CHECK SIGNAL INPUT (CRC OK WHEN H)
DFG	; DRUM FREQUENCY GENERATOR INPUT
$\overline{DON}$	; DRUM ON/OFF SWITCHING INPUT (ON WHEN L)
DPG	; DELAY PG INPUT
DREF	; DRUM PG REFERENCE INPUT
DVS1	; SETS VOLTAGE GIVEN TO DRUM MOTOR DURING SERVO LOCK-IN IN SEARCH MODE
DVS2	; SET VOLTAGE GIVEN TO DRUM MOTOR DURING SERVO LOCK-IN IN SEARCH MODE
LPG	; DRUM PHASE GENERATOR INPUT
$\overline{REW}$	; FAST FORWARD, REWIND SETTING (REWIND WHEN L)
RFDT	; RF SIGNAL INPUT
RPCK	; REFERENCE INPUT AT SEARCH
$\overline{SER}$	; SEARCH MODE SETTING (SEARCH WHEN L)
TIN1 – TIN5	; TEST INPUT (NORMALLY FIXED TO L)
TST1, TST2	; TEST INPUT (NORMALLY FIXED TO L)
$\overline{VAR}$	; EXTERNAL REFERENCE SETTING PIN OF PIN No.2 (NORMALLY FIXED TO H)

OUTPUT

$\overline{ALM}$	; ALARM OUTPUT AT SEARCH (ALARM CONDITION WHEN L)
BSPW	; BIAS SERVO PWM OUTPUT
CFGO	; CAPSTAN FREQUENCY GENERATOR OUTPUT
CREF	; CAPSTAN FREQUENCY REFERENCE OUTPUT
DBRK	; DRUM BRAKE OUTPUT (BRAKE ON WHEN H)
JSTL	; JUST LOCK MONITOR (JUST WHEN H)
JTSP	; JUST SPEED MONITOR OUTPUT (JUST SPEED WHEN H)
PCOT	; CAPSTAN PHASE COMPARATOR OUTPUT (TRI-STATE OUTPUT)
PHPW	; PHASE SERVO PWM OUTPUT
PLLK	; DRUM LOCK MONITOR OUTPUT (AT SEARCH, LOCK WHEN H)
RFW	; RF WINDOW OUTPUT (RF SPECIFIED AREA WHEN L)
SPPW	; SPEED SERVO PWM OUTPUT
SWP	; SWITCHING PULSE OUTPUT
TOU1 – TOU4	; TEST OUTPUT

INPUT/OUTPUT

TIO1, TIO2	; TEST INPUT/OUTPUT (NORMALLY FIXED TO L)

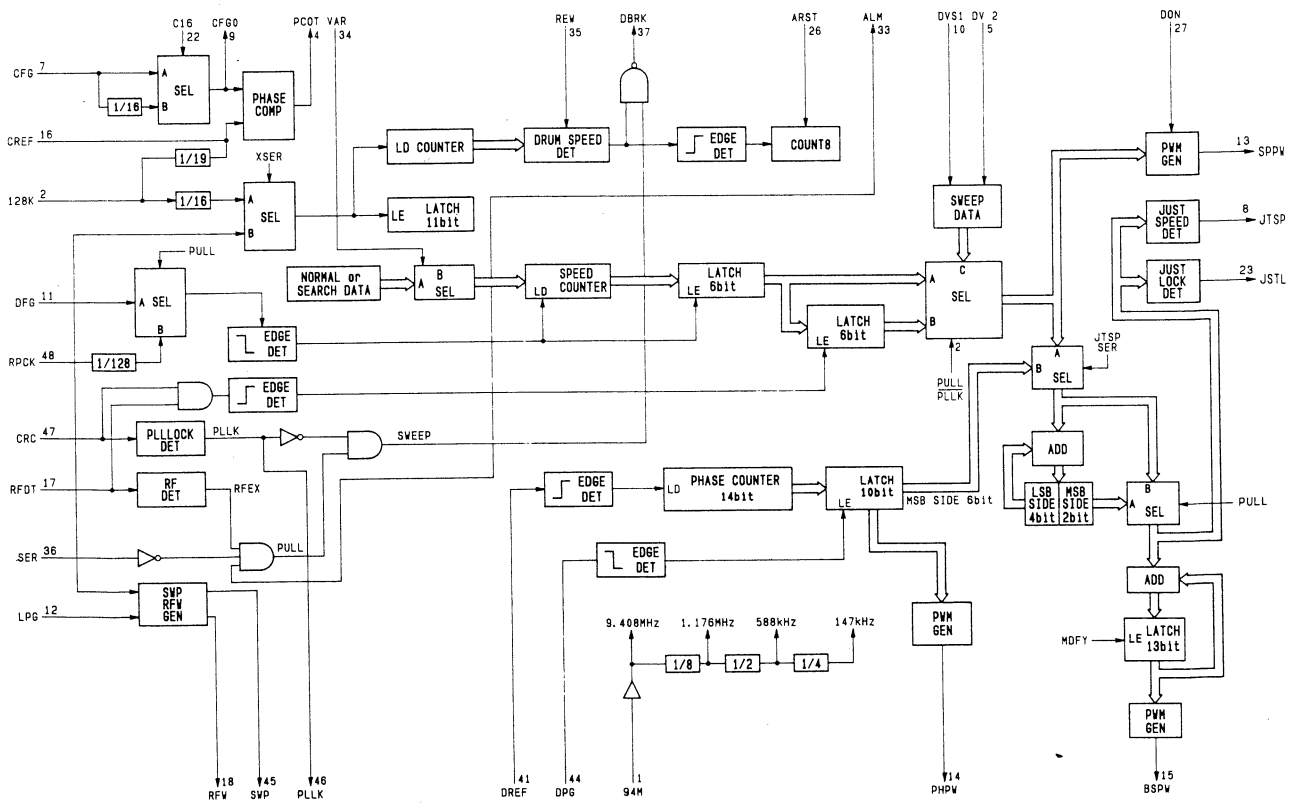

CXD1147Q (SONY) FLAT PACKAGE

C-MOS DIGITAL AUDIO INTERFACE FOR R-DAT

– TOP VIEW –

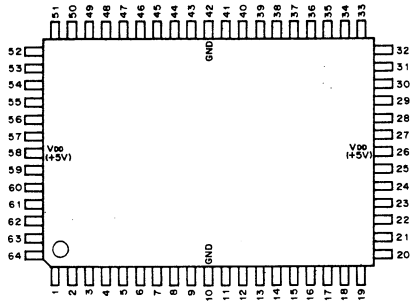

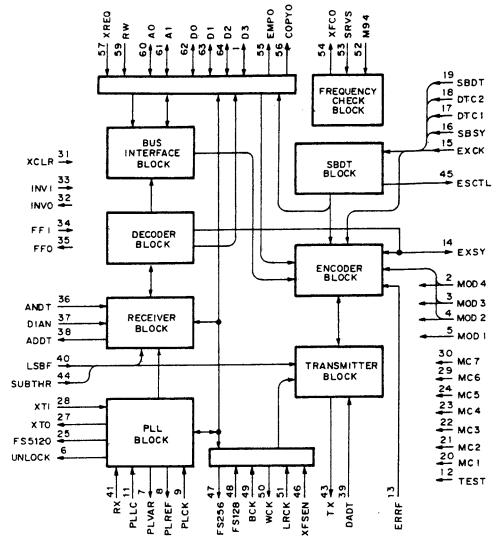

(1) AUTO MODE

(V_{DD} = +5V)

PIN NO.	I/O	SIGNAL	PIN NO.	I/O	SIGNAL	PIN NO.	I/O	SIGNAL	PIN NO.	I/O	SIGNAL
1	I/O	D3	17	I	DTC1	33	I	INVI	49	I/O	BCK
2	I	MOD4	18	I	DTC2	34	I	FFI	50	O	WCK
3	I	MOD3	19	I	SBDT	35	O	FFO	51	I/O	LRCK
4	I	MOD2	20	I	MC1	36	I	ANDT	52	I	M94
5	I	MOD1	21	I	MC2	27	I	DIAN	53	I	SRVS
6	O	UNLOCK	22	I	MC3	38	O	ADDT	54	O	XFCO
7	O	PLVAR	23	I	MC4	39	I	DADT	55	O	EMPO
8	O	PLREF	24	I	MC5	40	I	LSBF	56	O	COPYO
9	I	PLCK	25	O	FS5120	41	I	RX	57	I	XREQ
10	–	GND	26	–	V_{DD}	42	–	GND	58	–	V_{DD}
11	I	PLLC	27	O	XTO	43	O	TX	59	I	RW
12	I	TEST	28	I	XTI	44	I	SUBTHR	60	I	A0
13	I	ERRF	29	I	MC6	45	O	FSCTL	61	I	A1
14	I/O	EXSY	30	I	MC7	46	I	XFSEN	62	I/O	D0
15	I	EXCK	31	I	XCLR	47	O	FS256	63	I/O	D1
16	I	SBSY	32	O	INVO	48	I/O	FS128	64	I/O	D2

INPUT

A0, 1 ; MICROCOMPUTER INTERFACE ADDRESS
ANDT ; SERIAL DATA INPUT FOR A/D CONVERTER
DADT ; AUDIO DATA INPUT (DIGITAL SIGNAL PROCESS LSI FORMAT)
DIAN ; SELECT OUTPUT FROM ADDT (L = ANDT, H = RX)
DTC1, 2 ; DATA TRANSMISSION CONTROL BETWEEN DIGITAL SIGNAL PROCESS LSI AND MICROCOMPUTER
ERRF ; ERROR FLAG (H = INTERPOLATED AUDIO DATA)
EXCK ; DATA TRANSMISSION CLOCK BETWEEN DIGITAL SIGNAL PROCESS LSI AND MICROCOMPUTER
FFI ; D FLIP-FLOP INPUT
INVI ; INVERTER INPUT
LSBF ; LSB/MSB FIRST SELECT OF ADDT AND DADT (L = MSB FIRST)
M94 ; FOR RECEIVE FREQUENCY CHECK (9.408MHz)
MC1 – 7 ; TEST PIN
MOD1 – 4 ; MODE SELECT
PLCK ; PLL SYSTEM MASTER CLOCK (REF 512FS)
PLLC ; PLL MODE SELECT (L = INTERNAL DIGITAL PLL MODE, H = EXTERNAL PLL MODE)
RW ; MICROCOMPUTER INTERFACE READ/WRITE CONTROL (L = WRITE)
RX ; RECEIVE DATA (DIGITAL AUDIO INTERFACE FORMAT)
SBDT ; TRANSMISSION DATA BETWEEN DIGITAL SIGNAL PROCESS LSI AND MICROCOMPUTER
SBSY ; DATA TRANSMISSION SYNC SIGNAL BETWEEN DIGITAL SIGNAL PROCESS LSI AND MICROCOMPUTER
SRVS ; SERVO REFERENCE SIGNAL (12.8MHz) FOR RECEIVE FREQUENCY CHECK
SUBTHR ; WHEN IT IS "0", ALL DATA ASSIGNED AT SLOTS 4 TO 11 IS FORCIBLY SET TO "0". SLOTS 4 TO 11 ARE CONFORMED TO DIGITAL AUDIO INTERFACE FORMAT.(L = ALL 0)
TEST ; TEST PIN
XCLR ; RESET (L = RESET)
XFSEN ; FS SYSTEM CLOCK I/O CONTROL (L = OUTPUT)
XREQ ; MICROCOMPUTER INTERFACE DATA REQUEST
XTI ; CRYSTAL OSCILLATOR INPUT (512FS). USE IN INTERNAL DIGITAL PLL MODE.

OUTPUT

ADDT ; AUDIO DATA OUTPUT (DIGITAL SIGNAL PROCESS LSI FORMAT)
COPYO ; COPY INFORMATION (L = COPY OK)
EMPO ; PRE-EMPHASIS INFORMATION (L = NOT PRE-EMPHASIS)
FFO ; D FLIP-FLOP OUTPUT
FS256 ; 1/2 PLCK CLOCK
FS5120 ; 512FS (X'TAL OSC). USE IN INTERNAL DIGITAL PLL MODE.
FSCTL ; FS SYSTEM CLOCK I/O CONTROL (L = OUTPUT)
INVO ; INVERTER OUTPUT
PLREF ; SYNC DETECT SIGNAL OF RX INPUT (PHASE COMPARATION SIGNAL FOR PLL)
PLVAR ; 1/256 PLCK CLOCK (PHASE COMPARATION SIGNAL FOR PLL)
TX ; TRANSMISSION DATA (DIGITAL AUDIO INTERFACE FORMAT)
UNLOCK ; SHOWS RECEIVING CONDITION OF RX INPUT (H = ERROR OR FS TRANSITION)
WCK ; 2FS (XFSEN = L ; OUTPUT, XFSEN = H ; HIGH-IMPEDANCE)
XFCO ; RECEIVE FREQUENCY CHECK (H = NG, L = OK) WHEN SRVS IS FIXED M94/735 SIGNAL IS OUTPUT.
XTO ; CRYSTAL OSCILLATOR OUTPUT (512FS). USE IN INTERNAL DIGITAL PLL MODE.

INPUT/OUTPUT

BCK ; 64FS (XFSEN = L ; OUTPUT, XFSEN = H ; INPUT)
D0 – 3 ; MICROCOMPUTER INTERFACE DATA BUS
EXSY ; EXTERNAL SYNC SIGNAL (REF 50/3Hz)
FS128 ; 128FS (XFSEN = L ; OUTPUT, XFSEN = H ; INPUT)
LRCK ; FS (XFSEN = L ; OUTPUT, XFSEN = H ; INPUT)

CXD1160AP (SONY)

C-MOS DIGITAL AUDIO SIGNAL PROCESSOR
– TOP VIEW –

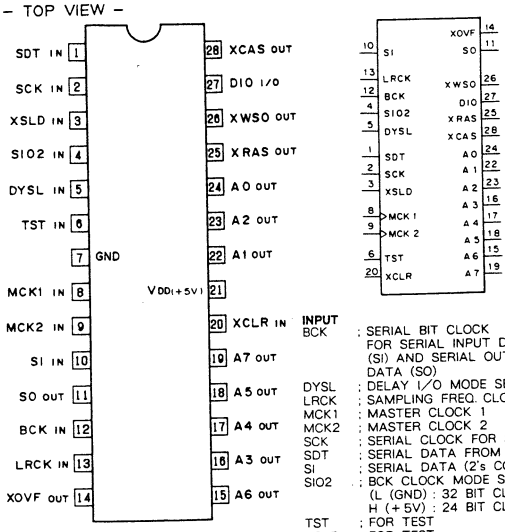

INPUT

BCK : SERIAL BIT CLOCK FOR SERIAL INPUT DATA (SI) AND SERIAL OUTPUT DATA (SO)
DYSL : DELAY I/O MODE SELECT
LRCK : SAMPLING FREQ. CLOCK
MCK1 : MASTER CLOCK 1
MCK2 : MASTER CLOCK 2
SCK : SERIAL CLOCK FOR SDT
SDT : SERIAL DATA FROM CPU
SI : SERIAL DATA (2's COMPLEMENT)
SI02 : BCK CLOCK MODE SELECT (L (GND) : 32 BIT CLOCK MODE, H (+5V) : 24 BIT CLOCK MODE)
TST : FOR TEST
XCLR : FOR TEST
XSLD : LATCH FOR SDT (SERIAL DATA) ACTIVE LOW

OUTPUT

A0 – A7 : ADDRESS FOR EXT. DRAM
SO : SERIAL DATA (2's COMPLEMENT)
XCAS : COLUMN ADDRESS STROBE FOR EXT. DRAM
XOVF : OVERFLOW DETECT
XRAS : LOW ADDRESS STROBE FOR EXT. DRAM

INPUT/OUTPUT

DIO : SERIAL DATA INPUT (DYSL = L) OR DATA INPUT/OUTPUT FOR EXT. DRAM (DYSL = H)

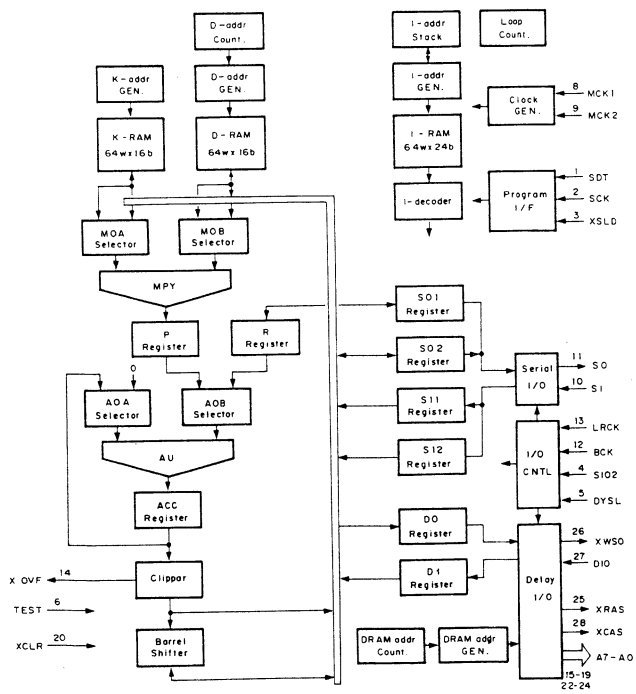

CXD8130Q (SONY)

C-MOS DMA SERIAL INTERFACE
– TOP VIEW –

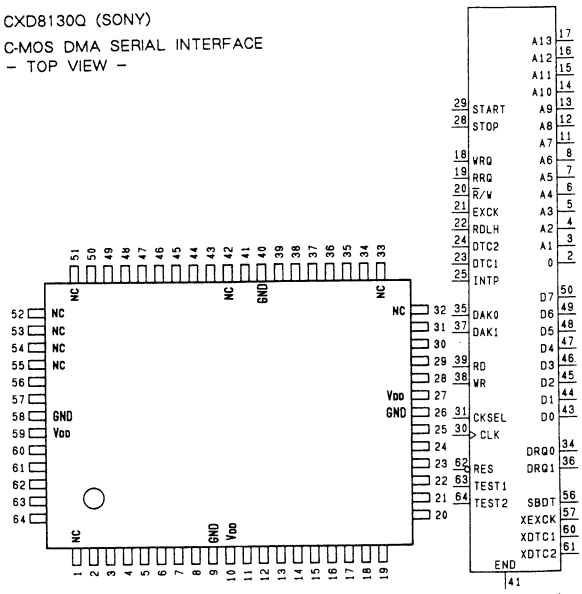

(V_{DD} = +5V)

PIN No.	I/O	SIGNAL	PIN No.	I/O	SIGNAL	PIN No.	I/O	SIGNAL	PIN No.	I/O	SIGNAL
1	–	NC	17	O	A13	33	–	NC	49	I/O	D6
2	O	A0	18	I	WRQ	34	O	DRQ0	50	I/O	D7
3	O	A1	19	I	RRQ	35	I	DAK0	51	–	NC
4	O	A2	20	I	R/W	36	O	DRQ1	52	–	NC
5	O	A3	21	I	EXCK	37	I	DAK1	53	–	NC
6	O	A4	22	I	RDLH	38	I	WR	54	–	NC
7	O	A5	23	I	DTC1	39	I	RD	55	–	NC
8	O	A6	24	I	DTC2	40	–	GND	56	O	SBDT
9	–	GND	25	I	INTP	41	O	END	57	O	XEXCK
10	–	V_{DD}	26	–	GND	42	–	NC	58	–	GND
11	O	A7	27	–	V_{DD}	43	I/O	D0	59	–	V_{CC}
12	O	A8	28	I	STOP	44	I/O	D1	60	O	XDTC1
13	O	A9	29	I	START	45	I/O	D2	61	O	XDTC2
14	O	A10	30	I	CLK	46	I/O	D3	62	I	RES
15	O	A11	31	I	CKSEL	47	I/O	D4	63	I	TEST1
16	O	A12	32	–	NC	48	I/O	D5	64	I	TEST2

A0–A13 ;ADDRESS SIGNAL FOR EXTERNAL ROM
WRQ ;SBDT OUTPUT REQUEST INPUT
RRQ ;SBDT INPUT REQUEST INPUT
R/W ;TIMING SIGNAL INPUT WHICH PERFORMS DIRECTION CONTROL OF SBDT BUS
EXCK ;TIMING SIGNAL FOR XEXCK OUTPUT
DTC1, DTC7 ;ORIGINAL SIGNAL OF XDTC1 AND XDTC2
INTP ;INDICATES COMMUNICATION END
STOP ;STOP CONTROL INPUT OF ADDRESS GENERATOR
START ;START CONTROL INPUT OF ADDRESS GENERATOR
CLK ;MASTER CLOCK INPUT
CKSEL ;BIT RATE VARIABLE SWITCH
DRQ0, 1 ;DMA RQ SIGNAL FOR CPU
DAK0, 1 ;DMA ACK SIGNAL FROM CPU
RD ;READ SIGNAL INPUT FROM CPU
WR ;WRITE SIGNAL INPUT FROM CPU
END ;INTERRUPTION SIGNAL INDICATING COMMUNICATION END FOR CPU
D0–D7 ;DATA BUS INPUT/OUTPUT
SBDT ;SERIAL DATA INPUT/OUTPUT
XEXCK ;SERIAL CLOCK
XDTC1, 2 ;CONTROL SIGNAL
RES ;RESET INPUT

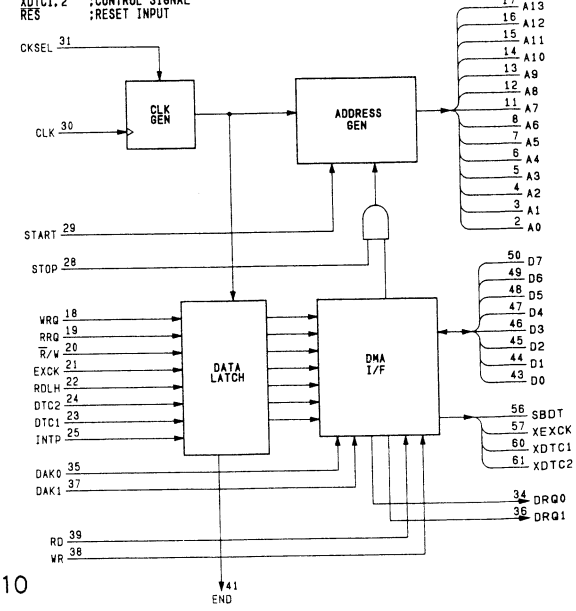

CXD8134Q (SONY)

C-MOS AES/EBU DIO PERIPHERAL CIRCUIT
– TOP VIEW –

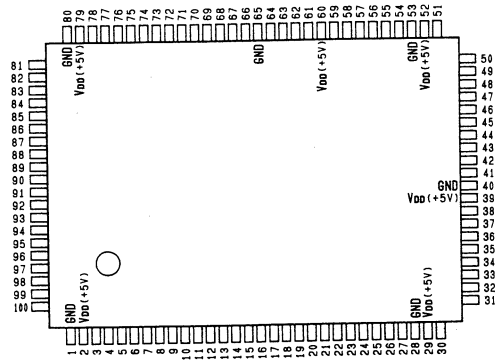

V_{DD} = +5V

PIN No.	I/O	SIGNAL	PIN No.	I/O	SIGNAL	PIN No.	I/O	SIGNAL	PIN No.	I/O	SIGNAL
1	–	GND	26	I	FS H/L	51	I	DR2	76	O	RIN LC
2	–	V_{DD}	27	I	EMPON	52	–	V_{DD}	77	O	DTLD
3	I	DTDO	28	–	GND	53	–	GND	78	I	RST1
4	I	LR02	29	–	V_{DD}	54	I	DR3	79	–	V_{DD}
5	I	BCK	30	I	AB1	55	I	IRSV1	80	–	GND
6	I	64FS	31	I	AB1	56	O	XREQT	81	O	TES1
7	O	DADT	32	I	AB2	57	O	RWTX	82	O	TES2
8	O	32LOAD	33	I/O	DB0	58	O	AT0	83	O	TES3
9	I	AESLR	34	I/O	DB1	59	O	AT1	84	O	TES4
10	I	AESBCK	35	I/O	DB2	60	–	V_{DD}	85	O	TES5
11	O	DIFS	36	I/O	DB3	61	O	DT0	86	O	TES6
12	I	AESTX	37	I/O	DB4	62	O	DT1	87	O	TES7
13	I	LRCK	38	I	IORD	63	O	DT2	88	I	TES8
14	I	128FS	39	–	V_{DD}	64	O	DT3	89	I	TES9
15	O	AESOUT	40	–	GND	65	–	GND	90	I	TES10
16	I	WCK	41	I	IOWR	66	O	WD INT/EXT	91	I	TES11
17	I	AESRX	42	I	DIEN	67	I	WD/DI	92	I	TES12
18	O	DTDI	43	I	PDEN	68	I	47UN	93	I	TES13
19	O	EXCKTRX	44	O	XREQR	69	O	WDUN	94	I	TES14
20	O	DTC12TR	45	O	RWRX	70	I	XDIOES	95	I	TES15
21	O	DTC1T	46	O	AR0	71	I	AESES	96	I	TES16
22	O	SBDTRX	47	O	AR1	72	O	LEXLC	97	I	TES17
23	O	SBDTTX	48	O	TEST MODE	73	O	LIN OE	98	O	RELC
24	O	SBSYOUT	49	I	DR0	74	O	RIN OE	99	I	CTL0
25	I	32kHzMOD	50	I	DR1	75	O	LINLC	100	I	CTL1

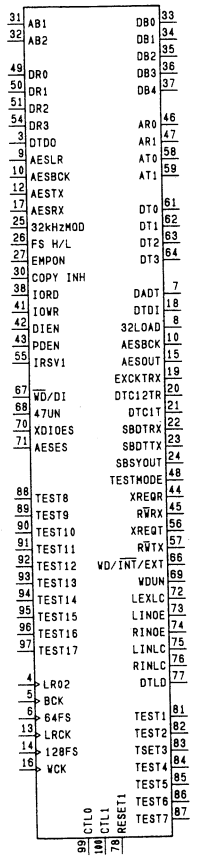

INPUT

128FS	; 128 • Fs
32kHzMOD	; 32kHz MODE SERFCT SIGNAL (FOR TEST MODE)
47UN	; PLL UNLOCK SIGNAL FOR RECEIVER
64FS	; 64 • Fs
AB1,2	; ADDRESS BUS
AESBCK	; BIT CLOCK EXTRACTED FROM AES/EBU DIGITAL AUDIO SIGNAL (64•Fs)
AESES	; AES/EBU DIGITAL IN EXIST SIGNAL
AESLR	; LRCK EXTRACTED FROM AES/EBU DIGITAL AUDIO SIGNAL (BEFORE Fs PROCESSING)
AESRX	; INPUT AUDIO DATA EXTRACTED FROM AES/EBU DIGITAL AUDIO SIGNAL (BEFORE CONVERSION)
AESTX	; AES/EBU DIGITAL OUTPUT SIGNAL (BEFORE PROCESSING)
BCK	; BIT CLOCK (32 • Fs)
COPY INH	; COPY INHIBITION MODE SETTING SIGNAL (FOR TEST MODE)
CTL0,1	; CONTROL
DIEN	; ENABLE SIGNAL (DIO CHIP SELECT)
DR0-DR3	; DATA BUS FOR RECEIVER
DTDO	; OUTPUT DIGITAL AUDIO DATA (BEFORE CONVERSION)
EMPON	; EMPHASIS ON/OFF SELECT SIGNAL (FOR TEST MODE)
FS H/L	; 44.1K/48K SELECT SIGNAL (FOR TEST MODE)
IORD	; I/O READ
IOWR	; I/O WRITE
IRSV1	; AUXILIARY INPUT 1
LR02	; FS CLOCK WHICH DELAYS 8-BIT CLOCK AMOUNT OF LRCK
LRCK	; FS CLOCK
PDEN	; PERIPHERAL DATA ENABLE
RST1	; RESET SIGNAL
TES8	; TEST (FOR SUB DATA MANUAL INPUT)
TES9	; MANUAL INPUT MODE SETTING
TES10	; MANUAL INPUT MODE SETTING
TES11	; LEXLC (MANUAL INPUT MODE)
TES12	; REXLC (MANUAL INPUT MODE)
TES13	; LINLC (MANUAL INPUT MODE)
TES14	; RINLC (MANUAL INPUT MODE)
TES15	; LINOE (MANUAL INPUT MODE)
TES16	; RINOE (MANUAL INPUT MODE)
TES17	; DILD (MANUAL INPUT MODE)
WCK	; WORD CLOCK (2 • Fs)
WD/DI	; MACHINE CLOCK (WORD/DIGITAL IN SELECT)
XDIOES	; EXIST SIGNAL

OUTPUT

32LOAD	; (FOR MONITOR) LOAD ENABLE SIGNAL OF 16/32 CONVERTER
AESOUT	; AES/EBU DIGITAL OUTPUT SIGNAL (AFTER PROCESSING)
AR0,1	; ADDRESS BUS FOR RECEIVER
AT0,1	; ADDRESS BUS FOR TRANSMITTER
DADT	; OUTPUT DIGITAL AUDIO DATA (AFTER CONVERSION)
DIFS	; LCRK EXTRACTED FROM AES/EBU DIGITAL AUDIO SIGNAL (AFTER FS PROCESSING)
DT0-DT3	; DATA BUS FOR TRANSMITING
DTC12TR	; SIGNAL 2 WHICH DISPLAYS THE SUB DATA TYPE
DTC1T	; SIGNAL 1 WHICH DISPLAYS THE SUB DATA TYPE
DTDI	; INPUT AUDIO DATA EXTRACTED FROM AES/EBU DIGITAL AUDIO SIGNAL (AFTER CONVERSION)
DTLD	; DATA LOAD SIGNAL (FOR MONITOR)
EXCKTRX	; EXTERNAL CLOCK (FOR RECEIVING AND TRANSMITTING)
LEXLC	; LCH EXTERNAL LATCH CLOCK (FOR MONITOR)
LINLC	; LCH INTERNAL LATCH CLOCK (FOR MONITOR)
LINOE	; LCH INTERNAL OUTPUT ENABLE (FOR MONITOR)
RELC	; RCH EXTERNAL LATCH CLOCK (FOR MONITOR)
REXLC	; RCH EXTERNAL LACH CLOCK (FOR MONITOR)
RINLC	; RCH INTERNAL LATCH CLOCK (FOR MONITOR)
RINOE	; RCH INTERNAL OUTPUT ENABLE (FOR MONITOR)
RWRX	; I/O READ/WRITE SELECT SIGNAL FOR RECEIVER
RWTX	; I/O READ/WRITE SIGNAL FOR TRANSMITTER
SBDTRX	; SUB DATA SIGNAL (FOR RECEIVER)
SBDTTX	; SUB DATA SIGNAL (FOR TRANSMITTER)
SBSYOUT	; SUB DATA SYNC SIGNAL
TES1-TES7	; TEST (I/O PORT MONITOR)
TEST MODE	; TEST MODE SETTING
WD INT/EXT	; WORD SYNC OUT (INTERNAL/EXTERNAL SELECT)
WDUN	; WORD SLIP DETECT SIGNAL (FOR MONITOR)
XREQR	; I/O REQUEST SIGNAL FOR RECEIVER
XREQT	; I/O REQUEST SIGNAL FOR TRANSMITTER

INPUT/OUTPUT

DB0-DB4 ; DATA BUS

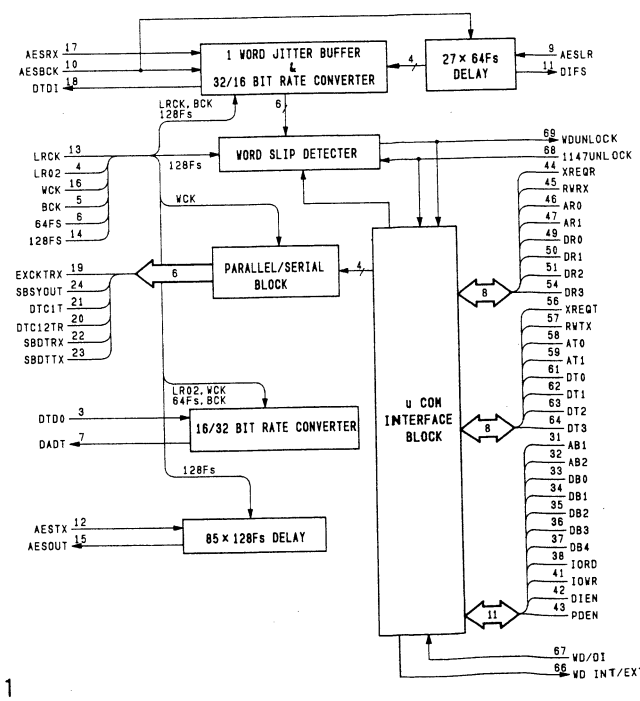

CXD8139AQ (SONY) FLAT PACKAGE

C-MOS PERIPHERAL INTERFACE UNIT

– TOP VIEW –

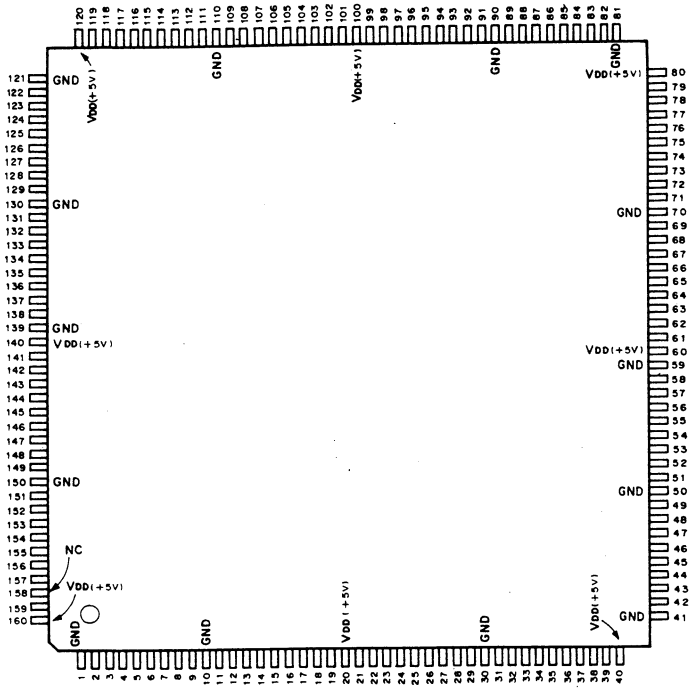

(VDD = +5V)

PIN No.	I/O	SIGNAL	PIN No.	I/O	SIGNAL	PIN No.	I/O	SIGNAL	PIN No.	I/O	SIGNAL
1	–	GND	41	–	GND	81	–	GND	121	–	GND
2	I	$\overline{XMRD}$	42	I/O	DB15	82	O	RAMLCS	122	I	$\overline{XSCCCWR}$
3	I	$\overline{XMWR}$	43	I/O	DB14	83	O	RAMHCS	123	I	$\overline{XSCCCRD}$
4	I	$\overline{XIORD}$	44	I/O	DB13	84	O	$\overline{XROMCS}$	124	I	$\overline{XSCCSRD}$
5	I	$\overline{XIOWR}$	45	I/O	DB12	85	O	$\overline{XEXROMCS}$	125	O	$\overline{XSCTXINT}$
6	I	$\overline{XBUFEN}$	46	I/O	DB11	86	O	$\overline{XMEM0CS}$	126	I/O	SCCDB0
7	I	BUFXRW	47	I/O	DB10	87	O	$\overline{XMEM1CS}$	127	I/O	SCCDB1
8	I	$\overline{XUBE}$	48	I/O	DB09	88	O	$\overline{XMEM2CS}$	128	I/O	SCCDB2
9	I	ASTB	49	I/O	DB08	89	O	$\overline{XMEM3CS}$	129	I/O	SCCDB3
10	–	GND	50	–	GND	90	–	GND	130	–	GND
11	I	$\overline{XPRES}$	51	I/O	DB07	91	O	$\overline{XMEM4CS}$	131	I/O	SCCDB4
12	O	KDCCLK	52	I/O	DB06	92	O	$\overline{XMEM5CS}$	132	I/O	SCCDB5
13	O	$\overline{XSYSLED}$	53	I/O	DB05	93	O	$\overline{XMEM6CS}$	133	I/O	SCCDB6
14	O	$\overline{XSPCCS}$	54	I/O	DB04	94	O	$\overline{XMEM7CS}$	134	I/O	SCCDB7
15	O	$\overline{XSPSCS}$	55	I/O	DB03	95	O	$\overline{XIO0CS}$	135	I/O	AD00
16	O	$\overline{XSBSW0}$	56	I/O	DB02	96	O	$\overline{XIO1CS}$	136	I/O	AD01
17	O	$\overline{XSBSW1}$	57	I/O	DB01	97	O	$\overline{XIO2CS}$	137	I/O	AD02
18	O	$\overline{XDIALCS}$	58	I/O	DB00	98	O	$\overline{XIO3CS}$	138	I/O	AD03
19	O	$\overline{DIALRES}$	59	–	GND	99	O	$\overline{XIO4CS}$	139	–	GND
20	–	VDD	60	–	VDD	100	–	VDD	140	–	VDD
21	O	$\overline{XKDCCS}$	61	O	AB17	101	O	$\overline{XIO5CS}$	141	I/O	AD04
22	O	$\overline{XSCUCS}$	62	O	AB16	102	O	$\overline{XIO6CS}$	142	I/O	AD05
23	O	$\overline{XPIC0CS}$	63	O	AB15	103	O	$\overline{XIO7CS}$	143	I/O	AD06
24	O	$\overline{XPIC1CS}$	64	O	AB14	104	O	$\overline{XRESET0}$	144	I/O	AD07
25	O	$\overline{XPIT0CS}$	65	O	AB13	105	O	$\overline{XRESET1}$	145	I/O	AD08
26	O	$\overline{XPIT1CS}$	66	O	AB12	106	O	$\overline{XRESET2}$	146	I/O	AD09
27	O	$\overline{XSRV0CS}$	67	O	AB11	107	O	SVTXRDY	147	I/O	AD10
28	O	$\overline{XSRV1CS}$	68	O	AB10	108	O	SVSO	148	I/O	AD11
29	O	$\overline{XSYSERR}$	69	O	AB09	109	I	SVSI	149	I/O	AD12
30	–	GND	70	–	GND	110	–	GND	150	–	GND
31	O	$\overline{XSRVWRCS}$	71	O	AB08	111	I	$\overline{XSVSCK}$	151	I/O	AD13
32	O	$\overline{XSRVRDCS}$	72	O	AB07	112	I	$\overline{XFLSCK}$	152	I/O	AD14
33	O	$\overline{XSYSSVCS}$	73	O	AB06	113	I	$\overline{XFLERR}$	153	I/O	AD15
34	O	$\overline{XSYSSCCS}$	74	O	AB05	114	I	$\overline{XFLBUSY}$	154	I	A16
35	O	$\overline{XSYSFLCS}$	75	O	AB04	115	O	FLSO	155	I	A17
36	O	$\overline{XPCTL}$	76	O	AB03	116	O	$\overline{XFLTXINT}$	156	I	A18
37	O	$\overline{XMCTL}$	77	O	AB02	117	O	CTL-5	157	I	A19
38	O	$\overline{XPBUFEN}$	78	O	AB01	118	I	STS-4	158	–	NC
39	O	$\overline{XMBUFEN}$	79	O	AB00	119	O	FLCLK	159	I	CLKOUT
40		VDD	80	–	VDD	120	–	VDD	160	–	VDD

INPUT

A16 – A19	; ADDRESS BUS
ASTB	; ADDRESS STROBE
BUFEN	; BUFFER ENABLE
BUFXRW	; BUFFER READ/WRITE
CLKOUT	; CLOCK
FLBUSY	; BUSY STATUS
FLERR	; ERROR STATUS
FLSCK	; SERIAL CLOCK
IOWR	; I/O WRITE
MRD	; MEMORY READ
MWR	; MEMORY WRITE
PRES	; POWER-ON RESET
SCCCRD	; DATA READ CHIP SELECT
SCCCWR	; DATA WRITE CHIP SELECT
SCCSRD	; STATUS READ CHIP SELECT
STS-4	; I/O READ
SVS CK	; SERIAL CLOCK
SVSI	; SERIAL DATA
UBE	; UPPER BYTE ENABLE

OUTPUT

AB00 – AB17	; SYSTEM ADDRESS BUS
CTL-5	; I/O WRITE
DIAL CS	; CHIP SELECT
DIAL RES	; RESET
FLCLK	; 1/2 CLOCK OUT
FLSO	; SERIAL DATA
FLTXINT	; TX INTERRUPT
IO OCS – 7CS	; CHIP SELECT
KDCCLK	; 1/4 CLOCK OUT
KDCCS	; CHIP SELECT
MBUFEN	; DATA TRANSCEIVER (MEMORY DATA ENABLE)
MCTL	; DATA TRANSCEIVER
MEM0CS – MEM7CS	; CHIP SELECT
PBUFEN, PCTL	; DATA TRANSCEIVER
PIC0CS, 1CS	; CHIP SELECT
PIT0CS, 1CS	; CHIP SELECT
RAMLCS, HCS	; CHIP SELECT
RESET0 – RESET2	; RESET
ROMCS	; CHIP SELECT
SBSW0, 1	; CHIP SELECT
SCTXINT	; TX INTERRUPT
SCUCS, SPCCS	; CHIP SELECT
SPSCS	; CHIP SELECT
SRV0CS, 1CS	; CHIP SELECT
SRVRDCS, SRVWRCS	; CHIP SELECT
SVSO	; SERIAL DATA
SVTXRDY	; TX READY
SYSERR	; LED OUTPUT
SYSFLCS, SYSLED	; CHIP SELECT
SYSSCCS, SYSSVCS	; CHIP SELECT

INPUT/OUTPUT

AD00 – AD15	; ADDRESS/DATA BUS
DB00 – DB15	; SYSTEM DATA BUS
SCCDB0 – SCCDB7	; DATA BUS

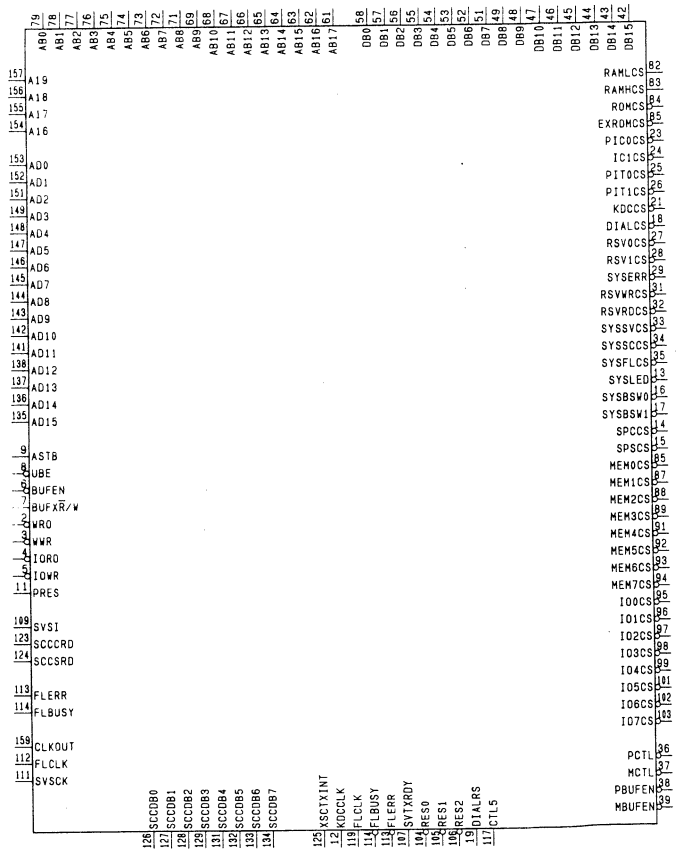

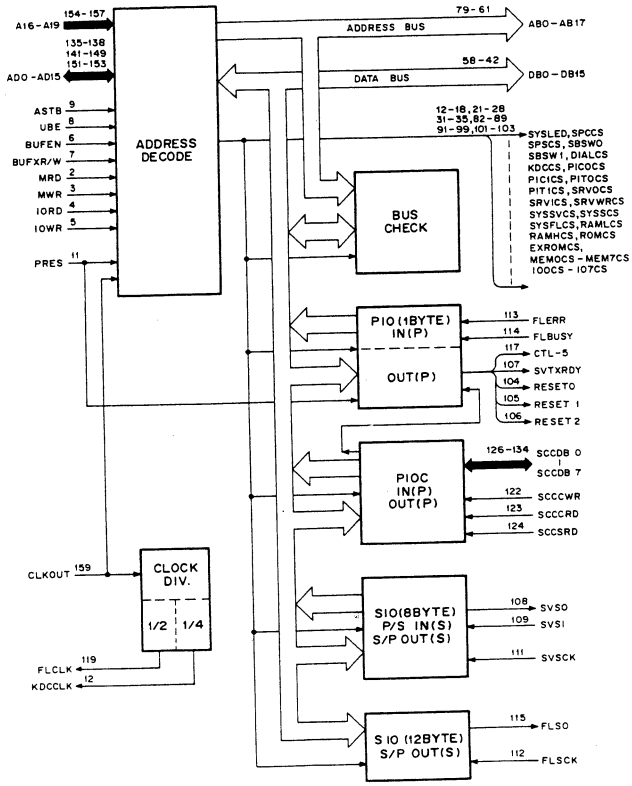

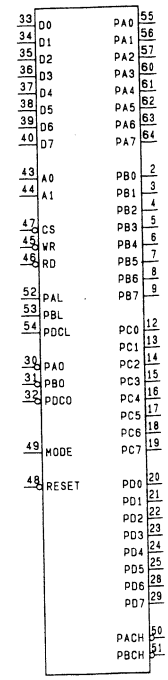

INPUT

A1, A0	; CPU ADDRESS BUS
CS	; CHIP SELECT
D7 – D0	; CPU DATA BUS
MODE	; LATCH SETTING SELECT IN THE PORT.
PAL	; LATCH SIGNAL INPUT FOR PORT-A
PA0	; L : PORT-A IS USED AS OUTPUT PORT. H : PORT-A IS USED AS INPUT PORT.
PBL	; LATCH SIGNAL INPUT FOR PORT-B
PB0	; L : PORT-B IS USED AS OUTPUT PORT. H : PORT-B IS USED AS INPUT PORT.
PDCL	; LATCH SIGNAL FOR PORT-C/D
PDCO	; L : PORT-C/D IS USED AS OUTPUT PORT. H : PORT-C/D IS USED AS INPUT PORT.
RD	; WHEN SET TO "L"IN CASE OF CS "L", PORT DATA SELECTED AT A1 AND A0 IS OUTPUT TO D7 – D0.
RST	; RESET
WR	; WHEN SET FROM "L"TO "H"IN CASE OF CS "L", D7 – D0 DATA IS OUTPUT TO THE PORT SELECTED AT A1 AND A0.

OUTPUT

PACH	; OUTPUT "L" WHEN PORT-A DATA VARLED BECOMING "HI-Z" WHEN PORT-A DATA NOT VARIED
PBCH	; OUTPUT "L" WHEN PORT-B DATA VARIED BECOMING "HI-Z" WHEN PORT-B DATA NOT VARIED

INPUT/OUTPUT

PA7 – PA0	; PORT-A INPUT/OUTPUT OUTPUT ($\overline{PAO}$: "L"), INPUT ($\overline{PAO}$: "H").
PB7 – BB0	; PORT-B INPUT/OUTPUT OUTPUT ($\overline{PBO}$: "L"), INPUT ($\overline{PBO}$: "H")
PC7 – PC0	; PORT-C INPUT/OUTPUT OUTPUT ($\overline{PDCO}$: "L"), INPUT ($\overline{PDCO}$: "H")
PD7 – PD0	; PORT-D INPUT/OUTPUT OUTPUT ($\overline{PDCO}$; "L"), INPUT ($\overline{PDCO}$: "H")

IC 19
CXD8141Q
****
CXD8141Q (SONY)
C-MOS PARALLEL I/O PORT
– TOP VIEW –

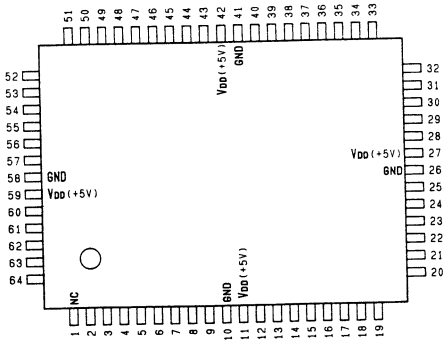

(V_{DD} = + 5V)

PIN No.	I/O	SIGNAL	PIN No.	I/O	SIGNAL	PIN No.	I/O	SIGNAL	PIN No.	I/O	SIGNAL
1	–	NC	17	I/O	PC5	33	I/O	D0	49	I/O	MODE
2	I/O	PB0	18	I/O	PC6	34	I/O	D1	50	O	$\overline{PACH}$
3	I/O	PB1	19	I/O	PC7	35	I/O	D2	51	O	$\overline{PBCH}$
4	I/O	PB2	20	I/O	PD0	36	I/O	D3	52	I	PAL
5	I/O	PB3	21	I/O	PD1	37	I/O	D4	53	I	PBL
6	I/O	PB4	22	I/O	PD2	38	I/O	D5	54	I	PDCL
7	I/O	PB5	23	I/O	PD3	39	I/O	D6	55	I/O	PA0
8	I/O	PB6	24	I/O	PD4	40	I/O	D7	56	I/O	PA1
9	I/O	PB7	25	I/O	PD5	41	–	GND	57	I/O	PA2
10	–	GND	26	–	GND	42	–	V_{DD}	58	–	GND
11	–	V_{DD}	27	–	V_{DD}	43	I	A0	59	–	V_{DD}
12	I/O	PC0	28	I/O	PD6	44	I	A1	60	I/O	PA3
13	I/O	PC1	29	I/O	PD7	45	I	$\overline{WR}$	61	I/O	PA4
14	I/O	PC2	30	I	$\overline{PAO}$	46	I	$\overline{RD}$	62	I/O	PA5
15	I/O	PC3	31	I	$\overline{PBO}$	47	I	$\overline{CS}$	63	I/O	PA6
16	I/O	PC4	32	I	$\overline{PDCO}$	48	I	$\overline{RST}$	64	I/O	PA7

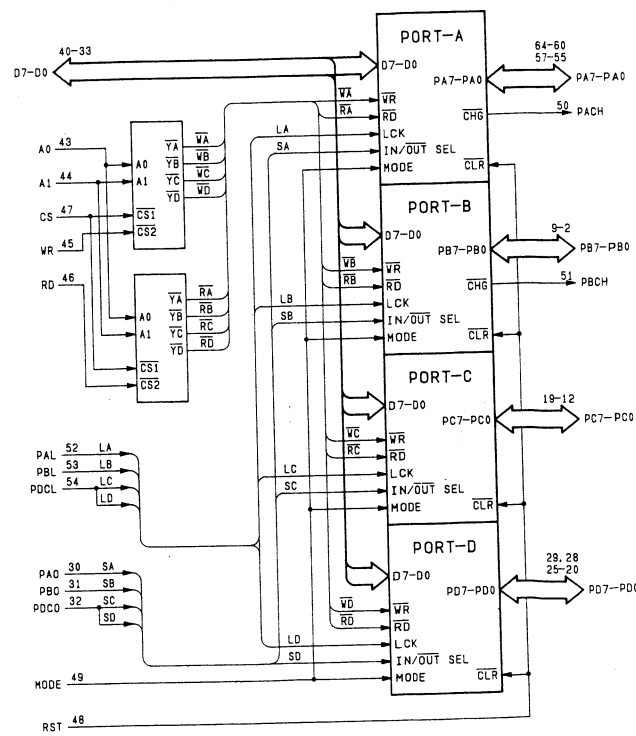

CXD8163AQ (SONY)

C-MOS SOUND MEMORY CONTROL FOR DAT

– TOP VIEW –

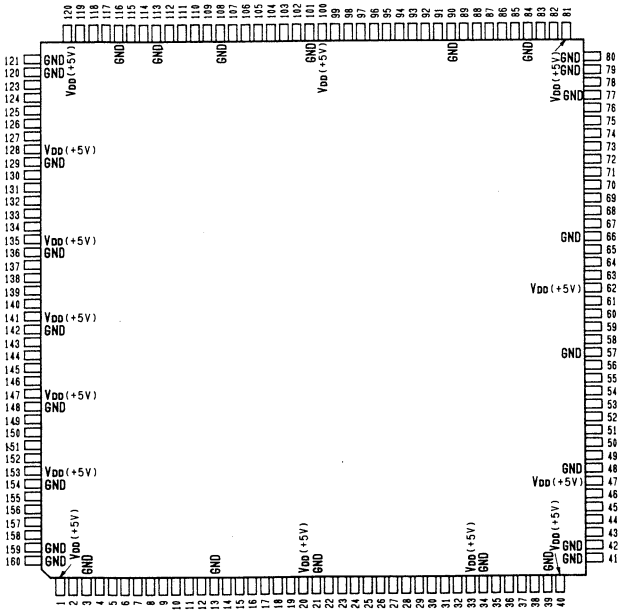

V_{DD} = + 5V

PIN No.	I/O	SIGNAL	PIN No.	I/O	SIGNAL	PIN No.	I/O	SIGNAL	PIN No.	I/O	SIGNAL
1	–	V_{DD}	41	–	GND	81	–	V_{DD}	121	–	GND
2	I	CPUCK	42	–	GND	82	O	LOAD	122	–	GND
3	–	GND	43	I/O	D3	83	O	$\overline{LOAD}$	123	O	RA9
4	I	$\overline{RESET}$	44	I/O	D2	84	–	GND	124	O	RA8
5	O	$\overline{WAIT}$	45	I/O	D1	85	I	SDI	125	O	RA7
6	I	$\overline{IORD}$	46	I/O	D0	86	O	SDO	126	O	RA6
7	I	$\overline{IOWR}$	47	–	V_{DD}	87	I	DSPSD1	127	O	RA5
8	I	$\overline{MRD}$	48	–	GND	88	O	DSPSD0	128	–	V_{DD}
9	I	$\overline{MWR}$	49	I/O	PIO7	89	O	TRGSD0	129	–	GND
10	O	$\overline{BUFDIR}$	50	I/O	PIO6	90	–	GND	130	O	RA4
11	I	$\overline{IOEN}$	51	I/O	PIO5	91	O	$\overline{PGMLD3}$	131	O	RA3
12	I	$\overline{MEMEN}$	52	I/O	PIO4	92	O	$\overline{PGMLD2}$	132	O	RA2
13	–	GND	53	I/O	PIO3	93	O	$\overline{PGMLD1}$	133	O	RA1
14	I	TEST2	54	I/O	PIO2	94	O	$\overline{PGMLD0}$	134	O	RA0
15	I	A15	55	I/O	PIO1	95	O	PGMCK	135	–	V_{DD}
16	I	A14	56	I/O	PIO0	96	O	PGMSDO	136	–	GND
17	I	A13	57	–	GND	97	I	ECS	137	I/O	RD15
18	I	A12	58	O	$\overline{PIORD}$	98	I	EA1	138	I/O	RD14
19	I	A11	59	O	$\overline{PIOWR}$	99	I	EA0	139	I/O	RD13
20	–	V_{DD}	60	O	PIOA1	100	–	V_{DD}	140	I/O	RD12
21	–	GND	61	O	PIOA0	101	–	GND	141	–	V_{DD}
22	I	A10	62	–	V_{DD}	102	I	ELD	142	–	GND
23	I	A9	63	I	DATFRMI	103	I	ECK	143	I/O	RD11
24	I	A8	64	I	LRCKI	104	I	ESD	144	I/O	RD10
25	I	A7	65	I	256FSI	105	I	$\overline{EMU}$	145	I/O	RD9
26	I	A6	66	–	GND	106	I	MEMCAP	146	I/O	RD8
27	I	A5	67	I	TEST1	107	I	RAMTYP	147	–	V_{DD}
28	I	A4	68	O	DATFRM	108	–	GND	148	–	GND
29	I	A3	69	O	$\overline{DATFRM}$	109	O	$\overline{RAMWR}$	149	I/O	RD7
30	I	A2	70	O	FS	110	O	$\overline{XFTRGB}$	150	I/O	RD6
31	I	A1	71	O	$\overline{FS}$	111	O	$\overline{XFTRGA}$	151	I/O	RD5
32	I	A0	72	O	32FS	112	O	$\overline{RAMRD}$	152	I/O	RD4
33	–	V_{DD}	73	O	$\overline{32FS}$	113	–	GND	153	–	V_{DD}
34	–	GND	74	O	64FS	114	O	$\overline{RAS1}$	154	–	GND
35	I/O	D7	75	O	$\overline{64FS}$	115	O	$\overline{RAS0}$	155	I/O	RD3
36	I/O	D6	76	O	128FS	116	–	GND	156	I/O	RD2
37	I/O	D5	77	–	GND	117	O	$\overline{CAS}$	157	I/O	RD1
38	I/O	D4	78	O	256FS	118	O	$\overline{WE}$	158	I/O	RD0
39	–	GND	79	–	GND	119	O	$\overline{OE}$	159	–	GND
40	–	V_{DD}	80	–	GND	120	–	V_{DD}	160	–	GND

INPUT

256FSI	; MASTER CLOCK (256FS)
A0 – A15	; CPU ADDRESS BUS
CPUCK	; CPU CLOCK
DATFRMI	; DAT FRAME SIGNAL
DSPSDI	; SERIAL DATA INPUT FROM DSP
EA0, 1	; DSP ADDRESS FROM EMMULATOR
ECK	; DSP PROGRAM DATA SHIFT CLOCK INPUT FROM EMMULATOR
$\overline{ECS}$	; DSP CHIP SELECT SIGNAL INPUT FROM EMMULATOR
$\overline{ELD}$	; DSP PROGRAM DATA LOAD SIGNAL FROM EMMULATOR
$\overline{EMU}$	; DSP EMMULATION ON/OFF
ESD	; DSP PROGRAM SERIAL DATA INPUT FROM EMMULATOR
$\overline{IOEN}$	; CHIP ENABLE SIGNAL IN I/O SPACE
$\overline{IORD}$	; CPU I/O READ SIGNAL
$\overline{IOWR}$	; CPU I/O WRITE SIGNAL
LRCKI	; LRCK SIGNAL (FS) WHICH BECOMES "L" WHEN SERIAL DATA LCH, AND "H"WHEN SERIAL DATA RCH.
MEMCAP	; MEMORY CAPACITY SELECT
$\overline{MEMEN}$	; CHIP ENABLE SIGNAL IN MEMORY SPACE
$\overline{MRD}$	; CPU MEMORY READ
$\overline{MWR}$	; CPU MEMORY WRITE
RAMTYP	; DRAM TYPE SELECT
$\overline{RESET}$	; CPU RESET SIGNAL
SDI	; SERIAL DATA INPUT. SERIAL DATA OF MSB FIRST AND 16-BIT/CH
TEST1, TEST2	; TEST (NORMALLY FIXED TO L)

OUTPUT

128FS, 64FS, $\overline{64FS}$, 32FS, $\overline{32FS}$, FS, $\overline{FS}$	; VARIOUS FREQUENCY-DIVIDED OUTPUT OF 256FS SIGNAL
256FS	; 256FS SIGNAL OUTPUT
$\overline{BUFDIR}$	; USED AS DIR SIGNAL WHEN THE BUFFER (TRANCIEVER) IS EXTERNALLY INSTALLED TO THE DATA BUS.
$\overline{CAS}$	; DRAM DRAM COLUMN ADDRESS STROBE SIGNAL OUTPUT
DATFRM, $\overline{DATFRM}$	; DAT FRAME SIGNAL OUTPUT
DSPSDO	; SERIAL DATA OUTPUT TO DSP. MSB FIRST 32 BIT/CH SERIAL DATA.
LOAD, $\overline{LOAD}$	; PARALLEL/SERIAL CONVERSION LOAD SIGNAL OUTPUT
$\overline{OE}$	; DRAM OUTPUT ENABLE SIGNAL OUTPUT
PGMCK	; SHIFT CLOCK OUTPUT OF DSP PROGRAM DATA
$\overline{PGMLD0}$ – $\overline{PGMLD3}$	; DSP PROGRAM DATA LOAD SIGNAL OUTPUT
PGMSDO	; DSP PROGRAM SERIAL DATA OUTPUT MSB FIRST 8 BITS ARE OUTPUT.
PIOA0, 1	; PARALLEL I/O ADDRESS SIGNAL (NORMALLY FIXED TO L)
$\overline{PIORD}$	; PARALLEL I/O READ SIGNAL (NORMALLY "H")
$\overline{PIOWR}$	; PARALLEL I/O WRITE SIGNAL (NORMALLY "H")
RA0 – RA9	; DRAM ADDRESS OUTPUT
$\overline{RAMRD}$	; DRAM READ MONITOR LED OUTPUT
$\overline{RAMWR}$	; DRAM WRITE MONITOR LED OUTPUT
$\overline{RAS0}$, $\overline{RAS1}$	; DRAM LOW ADDRESS STROBE SIGNAL OUTPUT
RD0 – RD15	; DRAM DATA BUS
READY	; CPU READY ($\overline{WAIT}$) SIGNAL (NORMALLY "H")
SDO	; SERIAL DATA OUTPUT
TRGSDO	; TRIGGER SERIAL DATA OUTPUT TO DSP. MSB FIRST 32 BIT/CH SERIAL DATA.
$\overline{WE}$	; DRAM WRITE ENABLE SIGNAL OUTPUT
$\overline{XFTRGB}$, $\overline{XFTRGA}$	; MONITOR LED OUTPUT OF X'FADE TRIGGER OUTPUT

INPUT/OUTPUT

D0 – D7	; CPU DATA BUS
PIO0 – PIO7	; 8 BIT DATA BUS OF PARALLEL I/O (NORMALLY "Hi-Z")
RD0 – RD15	; DRAM DATA BUS

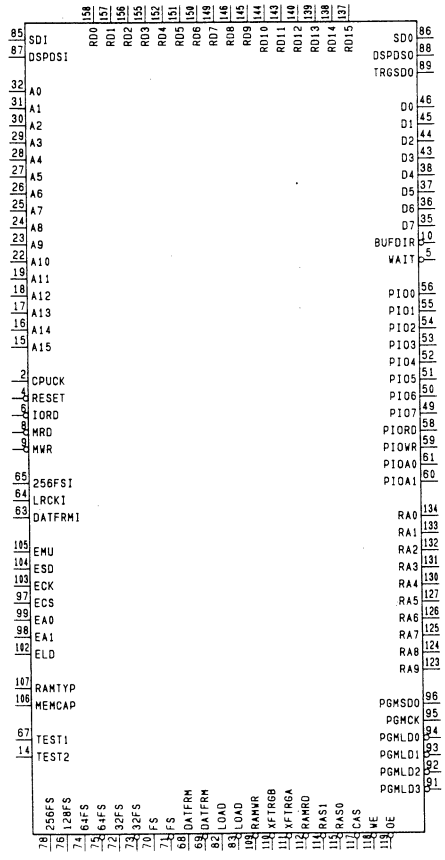

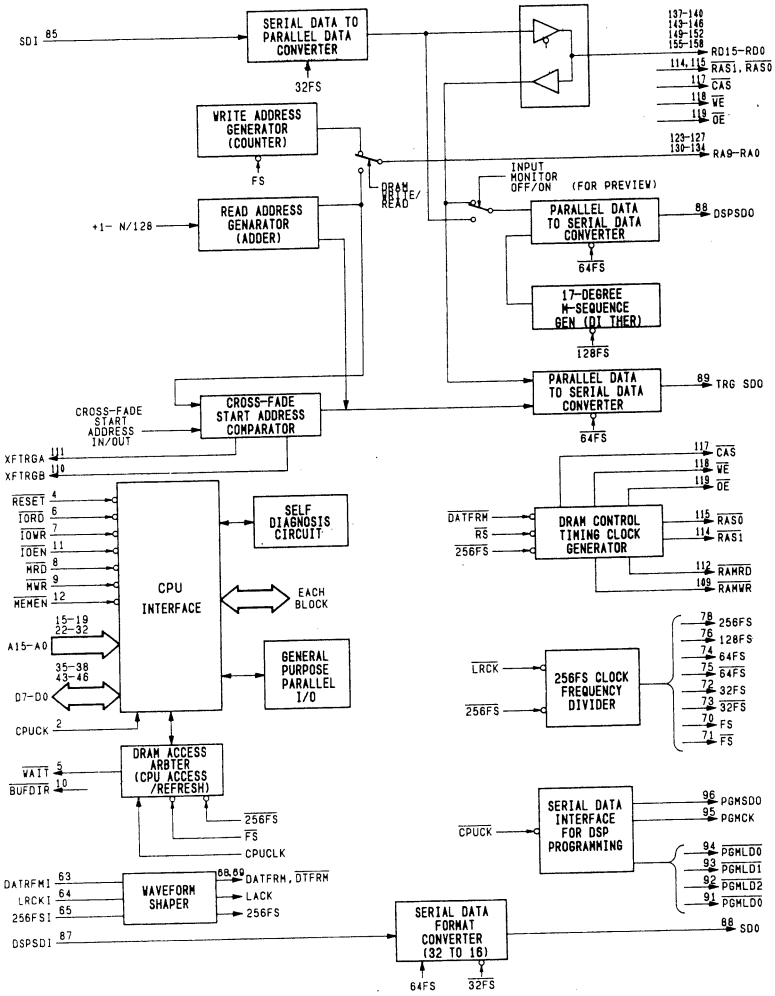
SDI 85
SERIAL DATA TO PARALLEL DATA CONVERTER
32FS
WRITE ADDRESS GENERATOR (COUNTER)
FS
+1- N/128
READ ADDRESS GENARATOR (ADDER)
DRAM WRITE/ READ
INPUT MONITOR OFF/ON (FOR PREVIEW)
PARALLEL DATA TO SERIAL DATA CONVERTER
88 DSPSDO
64FS
17-DEGREE M-SEQUENCE GEN (DITHER)
128FS
PARALLEL DATA TO SERIAL DATA CONVERTER
89 TRG SDO
64FS
CROSS-FADE START ADDRESS IN/OUT
CROSS-FADE START ADDRESS COMPARATOR
XFTRGA 111
XFTRGB 110
RESET 4
IORD 6
IOWR 7
IOEN 11
MRD 8
MWR 9
MEMEN 12
CPU INTERFACE
SELF DIAGNOSIS CIRCUIT
EACH BLOCK
GENERAL PURPOSE PARALLEL I/O
15-19 22-32
A15-A0
35-38 43-46
D7-D0
CPUCK 2
WAIT 5
BUFDIR 10
DRAM ACCESS ARBTER (CPU ACCESS /REFRESH)
256FS
FS
CPUCLK
DATFRM 117 CAS
118 WE
119 OE
DATFRM
RS
256FS
DRAM CONTROL TIMING CLOCK GENERATOR
115 RAS0
114 RAS1
112 RAMRD
109 RAMWR
LRCK
256FS
256FS CLOCK FREQUENCY DIVIDER
78 256FS
76 128FS
74 64FS
75 64FS
72 32FS
73 32FS
70 FS
71 FS
CPUCK
SERIAL DATA INTERFACE FOR DSP PROGRAMMING
96 PGMSDO
95 PGMCK
94 PGMLD0
93 PGMLD1
92 PGMLD2
91 PGMLD0
DATRFMI 63
LRCKI 64
256FSI 65
WAVEFORM SHAPER
68,69 DATFRM, DTFRM
LACK
256FS
DSPSDI 87
SERIAL DATA FORMAT CONVERTER (32 TO 16)
64FS
32FS
88 SDO
137-140
143-146
149-152
155-158
RD15-RD0
114,115 RAS1, RAS0
117 CAS
118 WE
119 OE
123-127
130-134
RA9-RA0

CXD8184AQ (SONY)

C-MOS R-DAT PERIHERAL CIRCUIT
– TOP VIEW –

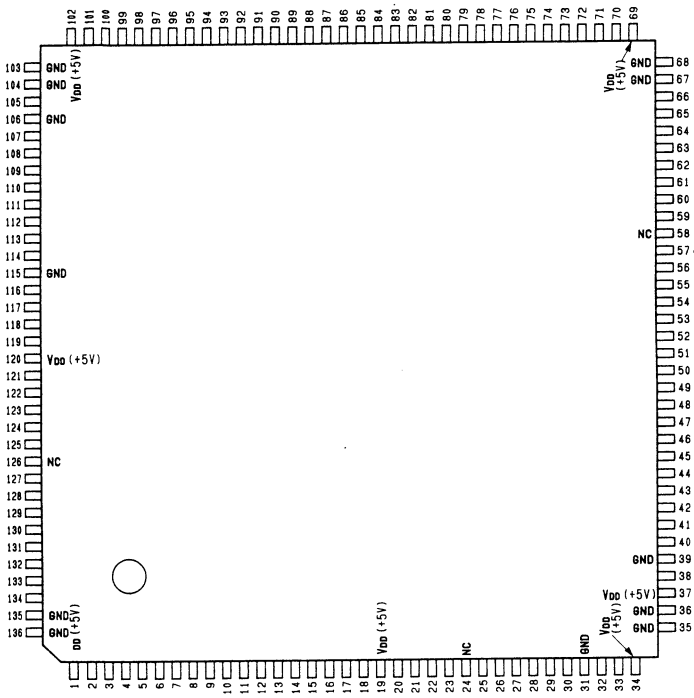

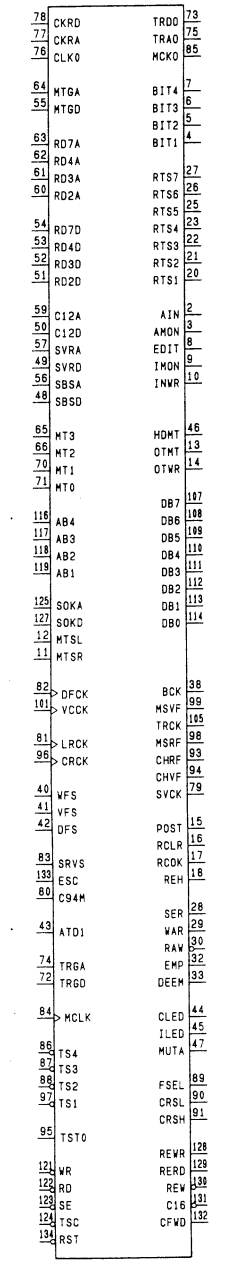

PIN No.	I/O	SIGNAL	PIN No.	I/O	SIGNAL	PIN No.	I/O	SIGNAL	PIN No.	I/O	SIGNAL
1	–	VDD	35	–	GND	69	–	VDD	103	–	GND
2	O	AIN	36	–	GND	70	I	MT1	104	–	GND
3	O	AMON	37	–	VDD	71	I	MT0	105	O	TRCK
4	O	BIT1	38	O	BCK	72	I	TRGD	106	–	GND
5	O	BIT2	39	–	GND	73	O	TRDO	107	I/O	DB7
6	O	BIT3	40	I	WFS	74	I	TRGA	108	I/O	DB6
7	O	BIT4	41	I	VFS	75	O	TRAO	109	I/O	DB5
8	O	EDIT	42	I	DFS	76	I	CLK0	110	I/O	DB4
9	O	IMON	43	I	ATD1	77	I	CKRA	111	I/O	DB3
10	O	INWR	44	O	CLED	78	I	CKRD	112	I/O	DB2
11	I	MTSR	45	O	ILED	79	O	SVCK	113	I/O	DB1
12	I	MTSL	46	O	HDMT	80	I	C94M	114	I/O	DB0
13	O	OTMT	47	O	MUTA	81	I	LRCK	115	–	GND
14	O	OTWR	48	I	SBSD	82	I	DFCK	116	I	AB4
15	O	POST	49	I	SVRD	83	I	SRVS	117	I	AB3
16	O	RCLR	50	I	C12D	84	I	MCLK	118	I	AB2
17	O	RCOK	51	I	RD2D	85	O	MCKO	119	I	AB1
18	O	REH	52	I	RD3D	86	I	XTS4	120	–	VDD
19	–	VDD	53	I	RD4D	87	I	XTS3	121	I	XWR
20	O	RTS1	54	I	RD7D	88	I	XTS2	122	I	XRD
21	O	RTS2	55	I	MTGD	89	O	FSEL	123	I	XSE
22	O	RTS3	56	I	SBSA	90	O	CRSL	124	I	XTSC
23	O	RTS4	57	I	SVRA	91	O	CRSH	125	I	SOKA
24	–	NC	58	–	NC	92	–	NC	126	–	NC
25	O	RTS5	59	I	C12A	93	O	CHRF	127	I	SOKD
26	O	RTS6	60	I	RD2A	94	O	CHVF	128	O	REWR
27	O	RTS7	61	I	RD3A	95	I	TST0	129	O	RERD
28	O	SER	62	I	RD4A	96	I	CRCK	130	O	XREW
29	O	WAR	63	I	RA7A	97	I	XTS1	131	O	XC16
30	O	XRAW	64	I	MTGA	98	O	MSRF	132	O	CFWD
31	–	GND	65	I	MT3	99	O	MSVF	133	I	ESC
32	O	EMP	66	I	MT2	100	–	GND	134	I	XRST
33	O	DEEM	67	–	GND	101	I	VCCK	135	–	GND
34	–	VDD	68	–	GND	102	–	VDD	136	–	GND

INPUT

AB1 – AB4	; CPU ADDRESS BUS (2S8 TO 5SB)
ATD1	; OFF TRACK DETECTION SIGNAL. H : ATF SYNC AND PCM SIGNAL ARE NO GOOD AT REPRODUCTION
C12A	; C1／C2 DISCRIMINATION SIGNAL. USED AS TIMING SIGNAL FOR ERROR CHECKER
C12D	; C1／C2 DISCRIMINATION SIGNAL. USED AS TIMING SIGNAL FOR ERROR CHECKER
C94M	; Fch CLOCK SIGNAL (9.408MHz typ.)
CKRA	; Fch SYSTEM CLOCK SIGNAL OF CXD1008Q AND CXD1009Q (18.816MHz typ.) USED AS CLOCK SIGNAL FOR ERROR CHECKER
CKRD	; Fch SYSTEM CLOCK SIGNAL OF CXD1008Q AND CXD1009Q (4.704MHz typ.) USED AS CLOCK SIGNAL FOR ERROR CHECKER
CLK0	; Fch CLOCK SIGNAL OF CXD1008Q AND CXD1009Q. USED AS CLOCK SIGNAL FOR ERROR CHECKER
CRCK	; Fs CRYSTAL OSCILLATION CLOCK. USED BY CLOCK CONTROL BLOCK
DFCK	; FS CLOCK SIGNAL (256 fs)
DFS	; FS EXTERNAL SYNC SIGNAL. EXTRACTED FROM AES／EBU D – I.
ESC	; EXTERNAL SOURCE (PARALLEL REMOTE) INPUT. (9.6kHz typ.)
LRCK	; FS CLOCK SIGNAL (fs)
MCLK	; CLOCK SIGNAL FOR ERROR CHECKER
MT0 – MT3	; MUTING TIME SETTING VALUE (MT0 = LSB, MT3 = MSB)
MTGA	; DURING ERROR MONITOR OUTPUT TO DATA BUS : H. USED AS TIMING SIGNAL FOR ERROR CHECKER
MTGD	; DURING ERROR MONITOR OUTPUT TO DATA BUS : H. USED AS TIMING SIGNAL FOR ERROR CHECKER
MTSL	; MUTE STATUS. H : R-CH MUTE IS BEING PROCESSED.
MTSR	; MUTE STATUS. H : L-CH MUTE IS BEING PROCESSED.
RD2A – 4A, 7A	; DATA BUS OF CXD1008Q AND CXD1009Q.
RD2D – 4D, 7D	; DATA BUS OF CXD1008Q AND CXD1009Q. FROM HERE, ERROR STATUS IS EXTRACTED
SBSA	; CXD1009Q SUBCODE DATA I／O TIMING REFERENCE SIGNAL. USED AS TIMING SIGNAL FOR ERROR CHECKER
SBSD	; CXD1009Q SUBCODE DATA I／O TIMING REFERENCE SIGNAL. USED AS TIMING SIGNAL FOR ERROR CHECKER
SOKA	; H : ADVANCED SBSY OK
SOKD	; H : DELAYED SBSY OK
SRVS	; FS CLOCK SIGNAL (12.8kHz typ.)
SVRA	; DRUM SERVO REFERENCE SIGNAL. USED AS TIMING SIGNAL FOR ERROR CHECKER
SVRD	; DRUM SERVO REFERENCE SIGNAL. USED AS TIMING SIGNAL FOR ERROR CHECKER
TRGA	; TIMING SIGNAL FOR ERROR CHECKER
TRGD	; TIMING SIGNAL FOR ERROR CHECKER
TST0	; TEST PIN, NORMALLY L
VCCK	; VCO OUTPUT CLOCK SIGNAL OF MASTER PLL. USED BY CLOCK CONTROL BLOCK
VFS	; FS EXTERNAL SYNC SIGNAL. EXTRACTED FROM VIDEO REFERENCE.
WFS	; FS EXTERNAL SYNC SIGNAL. INPUT FROM WORD SYNC IN.
XRD	; CPU BUS READ ENABLE SIGNAL (LOW ACTIVE)
XRST	; RESET PIN. L : RESET
XSE	; CPU BUS SP BOARD SELECT SIGNAL (LOW ACTIVE)
XTS1 – XTS4	; TEST PIN. NORMALLY H
XTSC	; TEST PIN. NORMALLY H
XWR	; CPU BUS WRITE ENABLE SIGNAL (LOW ACTIVE)

INPUT/OUTPUT

DB0 – DB7 ; CPU DATA BUS (DB0 = LSB, DB7 = MSB)

OUTPUT

AIN	; INPUT SEL SWITCHING. H : ANALOG IN, L : DIGITAL IN
AMON	; REPRODUCTION SOUND MONITOR SWITCHING. H : ADVANCED REPRODUCTION SOUND MONITOR, L : DELAYED REPRODUCTION SOUND MONITOR, NORMALLY L
BCK	; 32 fs CLOCK SIGNAL
BIT1 – BIT4	; THRESHOLD VALUE OF ZERO CROSS MUTE (BIT1 = LSB, BIT4 = MSB)
CFWD	; FOR RF PLL CONTROL H : TAPE PATH IN FORWARD DIRECTION
CHRF	; CHANNEL PLL REFERENCE SIGNAL (12.8kHz typ.) CONNECTED TO CHANNEL PLL PHASE COMPARATOR
CHVR	; CHANNEL PLL COMPARISON SIGNAL (12.8kHz typ.) CONNECTED TO CHANNEL PLL PHASE COMPARATOR
CLED	; H WHEN C1 ERROR IS DETECTED DURING REPRODUCTION. USED FOR LIGHTENING LED
CRSH	; XTAL, OSC CONTROL SIGNAL H : 24.5760MHz XTAL ON CONNECTED TO CRYSTAL OSCILLATION CIRCUIT CONNECTED TO CRYSTAL OSCILLATION CIRCUIT
CRSL	; XTAL OSC CONTROL SIGNAL H : 22.5792MHz XTAL ON
DEEM	; CONTROLS DA DE-EMPHASIS H : DA DE-EMPHASIS ON
EDIT	; RECORD SIGNAL SWITCHING SIGNAL H : EDIT (SELECTS SIGNAL FROM MEMORY START MEMORY) L : NORMAL (SELECTS D IN／A IN SIGNAL)
EMP	; CONTROLS AD EMPHASIS H : AD EMPHASIS ON
FSEL	; FS SELECT SIGNAL H : 48kHz, L : 44.1kHz
HDMT	; MUTES DELAYED 0.8 H : MUTE
ILED	; H WHEN POINTER COPY OR ALL POINTER IS DETECTED AT C2 DURING REPRODUCTION.
IMON	; MONITOR SELECTION. H : INPUT, L : REPRO
INWR	; FOR EDIT MEMORY TEST H : EM TEST MODE, L : NORMAL. NORMALLY L
MCK0	; CLOCK SIGNAL FOR ERROR CHECKER
MSRF	; MASTER PLL REFERENCE SIGNAL CONNECTED TO MASTER PLL PHASE COMPARATOR
MSVF	; MASTER PLL COMPARISON SIGNAL CONNECTED TO MASTER PLL PHASE COMPARATOR
MUTA	; MUTES ADVANCED 0.8 H : MUTE
OTMT	; CONTROLS ZERO CROSS MUTE CIRCUIT OF CXD8185AQ H : MUTE
OTWR	; FOR MEMORY START MEMORY TEST H : IM TEST MODE, L : NORMAL
POST	; SWITCHES THE INPUT MONITOR SIGNAL. H : POST (SELECTS SIGNAL FROM EDIT MEMORY) L : PRE (SELECTS D IN／A IN SIGNAL)
RCLR	; FOR CXD8151AQ TEST. NORMALLY L
RCOK	; REC CONTROL SIGNAL H : RECORDING ABLE
REH	; SWITCHES THE OUTPUT SIGNAL H : REHEARSAL (SELECTS SIGNAL FROM MEMORY START MEMORY) L : NORMAL (SELECTS SIGNAL FROM EDIT MEMORY)
RERD	; AUXILIARY READ PORT ENABLE SIGNAL (LOW ACTIVE)
REWR	; AUXILIARY WRITE PORT ENABLE SIGNAL (LOW ACTIVE)
RTS1	; FOR RECORDING TEST H : REC CON TEST MODE CONNECTED TO RTS1 OF CXD8185AQ.
RTS2	; FOR RECORDING TEST. SELECTS SIGNAL FOR TEST RECORDING. H : EXT (AT THIS TIME, RTST3 AND 7 ARE IGNORED.), L : INT
RTS3	; FOR RECORDING TEST. SELECTS SIGNAL FOR TEST RECORDING TO BE PAIRED WITH 1.57MHz SIGNAL. H : 4.7MHz, L : 130kHz
RTS4	; FOR RECORDING TEST. SELECTS HEAD FOR TEST RECORDING. H : DELAYED, L : ADVANCED
RTS5	; FOR RECORDING TEST. SELECTS HEAD FOR TEST RECORDING. H : ONE HEAD, L : BOTH HEADS (AT THIS TIME, RTST6 IS IGNORED.)
RTS6	; FOR RECORDING TEST. SELECTS HEAD FOR TEST RECORDING. H : B HEAD, L : A HEAD
RTS7	; FOR RECORDING TEST. SELECTS HEAD FOR RECORDING 1.57MHz SIGNAL. H : B HEAD, L : A HEAD
SER	; DPG GEN H : TAPE PATH SEARCH MODE, L : NORMAL
SVCK	; DRUM SERVO REFERENCE SIGNAL
TRAO	; TIMING SIGNAL FOR ERROR CHECKER
TRCK	; LRCK 1／8 FREQUENCY-DIVIDED CLOCK. FOR SY TIMER
TRDO	; TIMING SIGNAL FOR ERROR CHECKER
WAR	; CONTROLS EXSY PHASE H : WAR MODE, L : MODE SPECIFIED BY XRAW
XC16	; FOR RF PLL CONTROL H : TAPE PATH BY x16 AND x8
XRAW	; CONTROLS EXSY PHASE. L : RAW MODE, H : SUBIN MODE
XREW	; FOR RF PLL CONTROL H : TAPE PATH SEARCH MODE

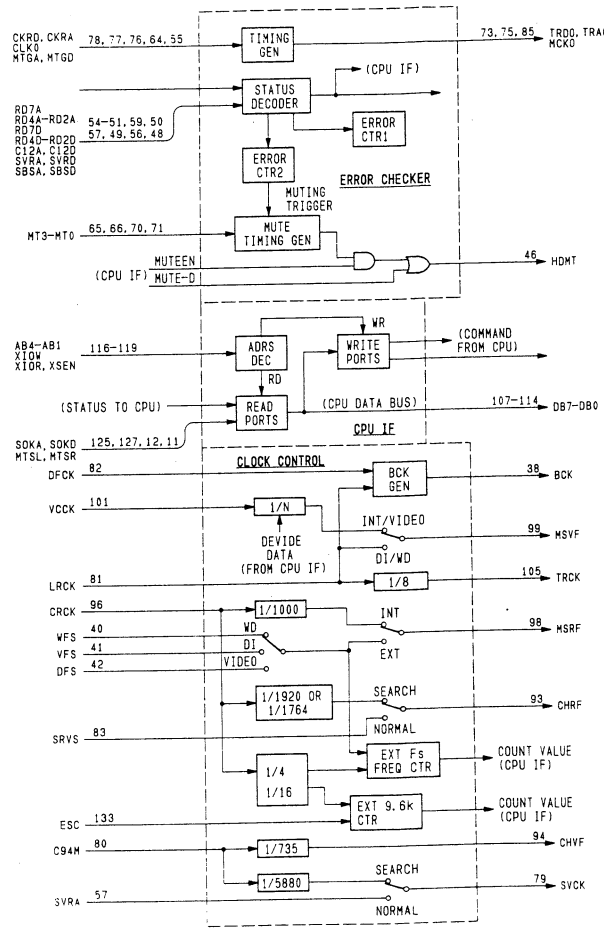

CXD8185AQ (SONY) FLAT PACKAGE

C-MOS R-DAT PERIPHERAL CIRCUIT

– TOP VIEW –

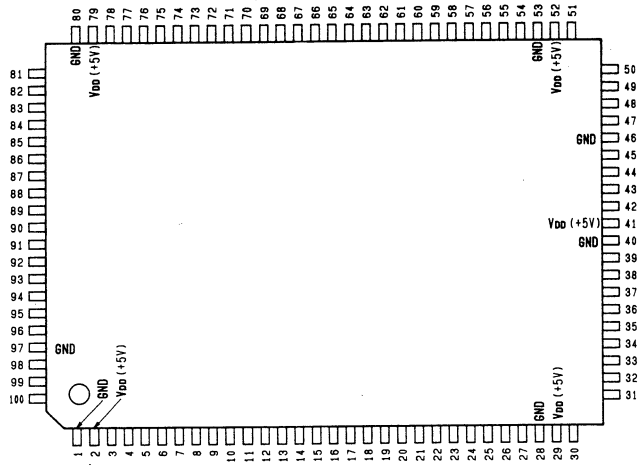

PIN No.	I/O	SIGNAL	PIN No.	I/O	SIGNAL	PIN No.	I/O	SIGNAL	PIN No.	I/O	SIGNAL
1	–	GND	26	I	RFD	51	I	$\overline{RAW}$	76	I	BIT3
2	–	VDD	27	I	RFW	52	–	VDD	77	I	BIT2
3	I	$\overline{RST}$	28	–	GND	53	–	GND	78	I	BIT1
4	I	DFGI	29	–	VDD	54	I	WAR	79	–	VDD
5	O	DFGO	30	O	RFWD	55	I	SER	80	–	GND
6	I	RPMI	31	O	RFSA	56	I	RTS7	81	I	AMON
7	I	ATMI	32	O	RFSD	57	I	RTS6	82	I	AIN
8	I	ERD	33	I	TST4	58	I	RTS5	83	O	ADDT
9	I	PCKA	34	I	SWP	59	I	RTS4	84	I	DDTA
10	I	PCKD	35	O	SWPD	60	I	RTS3	85	I	DDTD
11	O	GPCA	36	O	DPGA	61	I	RTS2	86	O	DOUT
12	O	GPCB	37	O	DPGD	62	I	RTS1	87	I	DPD
13	I	AD2A	38	I	DFG	63	I	REH	88	I	DRD
14	I	AD2D	39	O	DATF	64	I	RCOK	89	I	DAD
15	O	ATD2	40	–	GND	65	I	RCLR	90	I	DDI
16	I	REDA	41	–	VDD	66	I	POST	91	O	DTPM
17	I	REDD	42	O	ESYA	67	I	OTWR	92	O	DTRM
18	O	RCDA	43	O	ESYD	68	I	OTMT	93	I	DPAS
19	O	RCDD	44	I	ARE	69	O	MTSL	94	I	TST5
20	I	REPA	45	I	C94M	70	O	MTSR	95	O	BKCK
21	I	REPD	46	–	GND	71	I	INWR	96	O	ATMK
22	O	RCPB	47	I	LRCK	72	I	IMON	97	–	GND
23	O	DTEA	48	I	WCK	73	I	FSEL	98	I	TST3
24	O	DTED	49	I	BCK	74	I	EDIT	99	I	TST2
25	I	RFA	50	I	64FS	75	I	BIT4	100	I	TST1

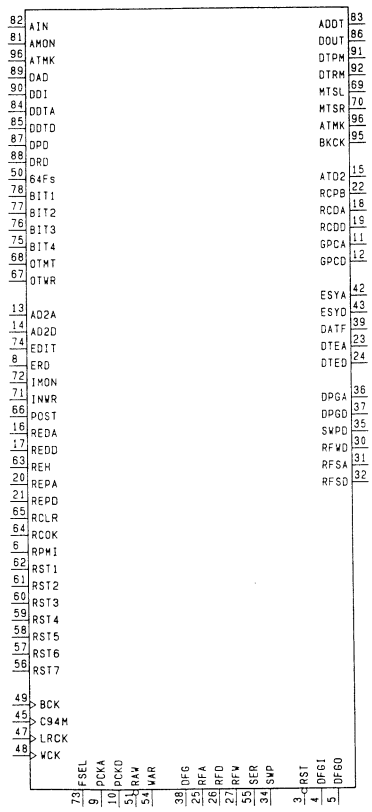

INPUT

64FS : 64・Fs
AD2A : ATD2-A IN
AD2D : ATD2-D IN
AIN : ANALOG IN
AMON : ADVANCED HEAD PB MONITOR
ARE : AREA
ATMK : ATF MASK WINDOW IN
BCK : BIT CLOCK
BIT1 – BIT4 : ZERO CROSS MUTE LEVEL CONTROL
C94M : CLOCK 9.4MHz
DAD : A/D CONVERTED AUDIO DATA
DDI : DI INPUT AUDIO DATA
DDTA : PLAYBACK AUDIO DATA FROM LEADING HEAD SIGNAL PROCESSING IC
DDTD : PLAYBACK AUDIO DATA FROM TRAILING HEAD SIGNAL PROCESSING
DFG : DRUM FG
DFGI : DRUM FG IN
DPAS : DATA PASS (SKIP ZERO CROSS MUTE)
DPD : PLAYBACK AUDIO READ DATA FROM EDIT MEMORY
DRD : PLAYBACK AUDIO READ DATA FROM INSTANT MEMORY
EDIT : RECORD SIGNAL SWITCHING ("H" ; EDIT,"L" : NORMAL)
ERD : EXTERNAL REC DATA IN
FSEL : FS SELECT
IMON : MONITOR SELECTION
INWR : IN WRITE
LRCK : LR CLOCK
OTMT : OUT MUTE
OTWR : OUT WRITE
PCKA : PLCK-A IN
PGKD : PLCK-D IN
POST : POST
$\overline{RAW}$: READ AFTER WRITE (ACTIVE LOW)
RCLR : RAM CLEAR
RCOK : REC OK SIGNAL
REDA : RECDATA-A (from CXD1009) IN
REDD : RECDATA-D (from CXD1009) IN
REH : REHEARSAL
REPA : RECPB-A (from CXD1009) IN
REPD : RECPB-D (from CXD1009) IN
RFA : RF DETECTION-A IN
RFD : RF DETECTION-D IN
RFW : RF WINDOW IN
RPMI : REC/PB MASK WINDOW IN
$\overline{RST}$: RESET
RTS1 – RTS7 : REC TEST
SER : SEARCH
SWP : SWITCHING PULSE
WAR : WRITE AFTER READ
WCK : WORD CLOCK

OUTPUT

ADDT : RECORD AUDIO DATA TO SIGNAL PROCESSING IC
ATD2 : ATD2 OUT
ATMK : REC/PB MASK WINDOW OUT
BKCK : BLOCK CLOCK
DATF : DAT FRAME
DFGO : DRUM FG OUT
DTEA : DATA ENABLE-A OUT
DTED : DATA ENABLE-D OUT
DOUT : DATA OUT
DPGA : DELAYED PG-A
DPGD : DELAYED PG-D
DTPM : AUDIO WRITE DATA TO EDIT MEMORY
DTRM : AUDIO WRITE DATA TO INSTANT MEMORY
ESYA : EXSY-A
ESYD : EXSY-D
GPCA : GATED PLCK A OUT
GPCB : GATED PLCK B OUT
MTSL : MUTE STATUS L
MTSR : MUTE STATUS R
RCDA : REC DATA-A OUT
RCDD : REC DATA-D OUT
RCPB : REC/PB OUT
RFWD : RF WINDOW-D OUT
RFSA : RF SAFE-A OUT
RFSD : RF SAFE-D OUT
SWPD : SWITCHING PULSE-D

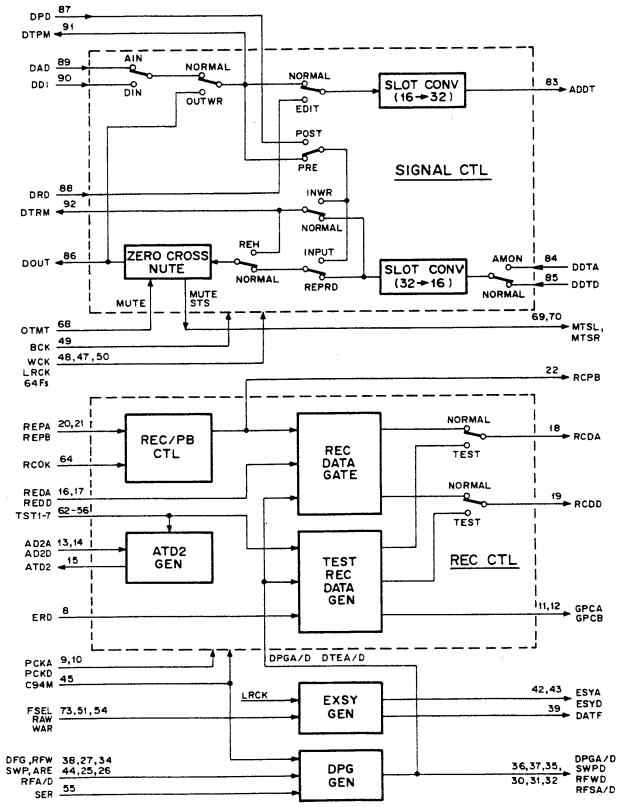

CXD8319M (SONY)

C-MOS R-DAT SYNC REC CIRCUIT

– TOP VIEW –

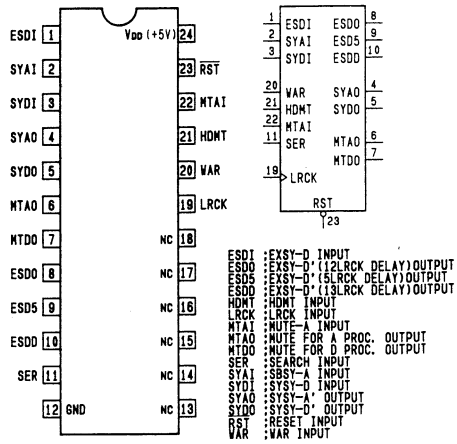

ESDI :EXSY-D INPUT
ESDO :EXSY-D'(12LRCK DELAY)OUTPUT
ESD5 :EXSY-D'(5LRCK DELAY)OUTPUT
ESDD :EXSY-D'(13LRCK DELAY)OUTPUT
HDMT :HDMT INPUT
LRCK :LRCK INPUT
MTAI :MUTE-A INPUT
MTAO :MUTE FOR A PROC. OUTPUT
MTDO :MUTE FOR D PROC. OUTPUT
SER :SEARCH INPUT
SYAI :SBSY-A INPUT
SYDI :SYSY-D INPUT
SYAO :SYSY-A' OUTPUT
SYDO :SYSY-D' OUTPUT
RST :RESET INPUT
WAR :WAR INPUT

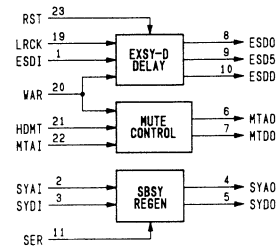

CXK58257AM-10LL (SONY) FLAT PACKAGE
MS62256CLL-10FC (MOSEL) FLAT PACKAGE

C-MOS 256K (32768x8)-BIT STATIC RAM
– TOP VIEW –

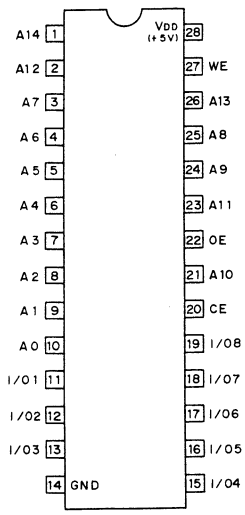

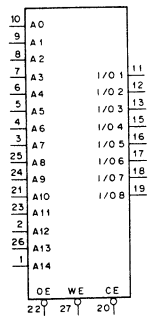

A0 – A14 : ADDRESS INPUTS
CE : CHIP ENABLE INPUT
I/O1 – I/O8 : DATA INPUTS/OUTPUTS
OE : OUTPUT ENABLE INPUT
WE : WRITE ENABLE INPUT

CE	OE	WE	MODE	I/O TERMINAL
1	×	×	NOT SELECT	HIGH IMPEDANCE
0	1	1	OUTPUT DISABLE	HIGH IMPEDANCE
0	0	1	READ	OUTPUT DATA
0	×	0	WRITE	INPUT DATA

0 : LOW LEVEL
1 : HIGH LEVEL
× : DON'T CARE

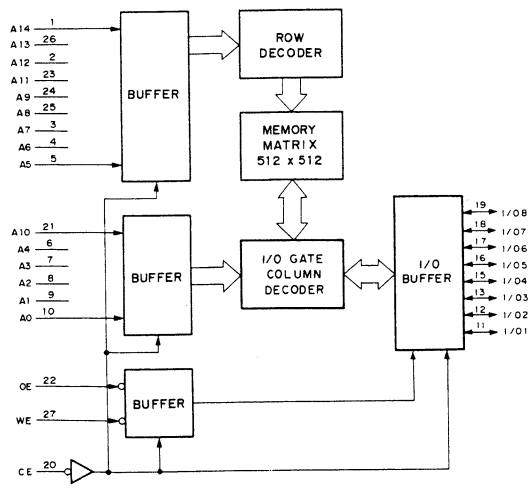

HD14053BFP (HITACHI) FLAT PACKAGE
MC14053BF (MOTOROLA) FLAT PACKAGE

C-MOS TRIPLE 2-CHANNEL ANALOG MULTIPLEXERS/DEMULTIPLEXERS
– TOP VIEW –

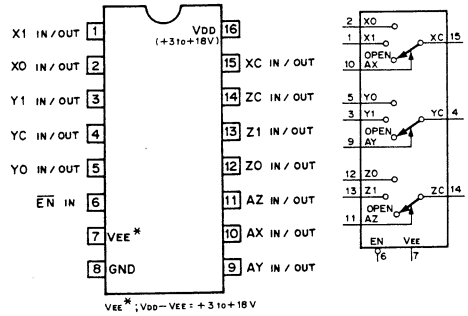

0; LOW LEVEL
1; HIGH LEVEL
X; DON'T CARE.

CONT. INPUTS		ON
EN	A (X,Y,Z,)	CHANNEL
0	0	0
0	1	1
1	X	OPEN

LM358PS (TI) FLAT PACKAGE

DUAL OPERATIONAL AMPLIFIERS
– TOP VIEW –

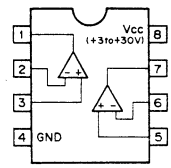

LM393PS (TI) FLAT PACKAGE

DUAL VOLTAGE COMPARATORS
– TOP VIEW –

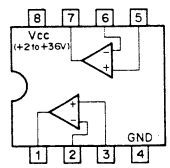

M5219L (MITSUBISHI)

LOW NOISE OPERATIONAL AMPLIFIER
– SIDE VIEW –

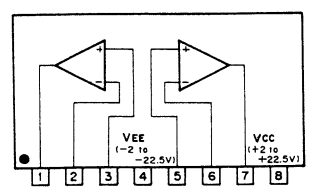

MB3763PF (FUJITSU) FLAT PACKAGE

BI-DIRECTIONAL MOTOR DRIVER

- TOP VIEW -

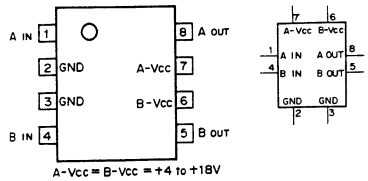

INPUTS		OUTPUTS		OUTPUT MODE
A IN	B IN	A OUT	B OUT	
0	0	Hi-Z	Hi-Z	STAN-BY
0	1	H	L	OPERATE
1	0	L	H	OPERATE
1	1	L	L	BRAKE

0 : Less than 0.4V
1 : More than 2.4V
L : LOW LEVEL
H : HIGH LEVEL
Hi-Z : HIGH IMPEDANCE

MC14066BF (MOTOROLA) FLAT PACKAGE

C-MOS QUAD BILATERAL ANALOG SWITCH

- TOP VIEW -

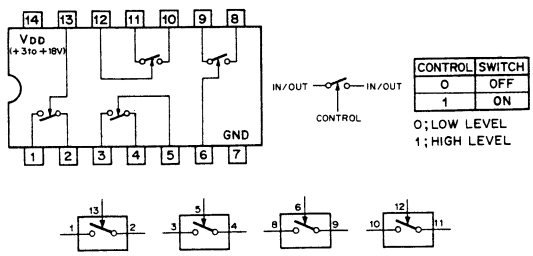

CONTROL	SWITCH
0	OFF
1	ON

0;LOW LEVEL
1;HIGH LEVEL

MC1648P (MOTOROLA)

ECL VOLTAGE CONTROLLED OSCILLATOR

- TOP VIEW -

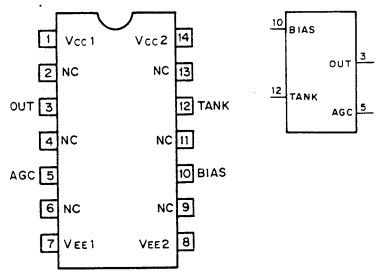

Supply Voltage	Supply Pins	GND Pins
+5.0Vdc	1,14	7,8
-5.2Vdc	7,8	1,14

MC34051P (MOTOROLA)

RS-422 DRIVER/RECEIVER

- TOP VIEW -

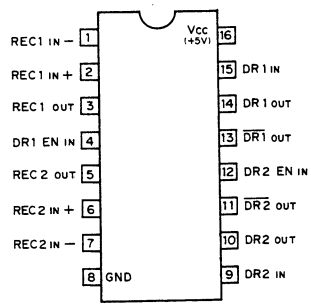

DR EN	MODE
0	DISABLE
1	ENABLE

0 ; LOW LEVEL
1 ; HIGH LEVEL

DR ; DRIVER
DR EN ; DRIVER ENABLE
REC ; RECEIVER

DRIVER CIRCUIT

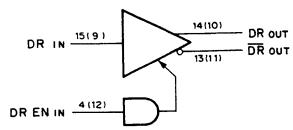

RECEIVER CIRCUIT

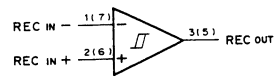

MC4044P (MOTOROLA)

PHASE-FREQUENCY DETECTOR

- TOP VIEW -

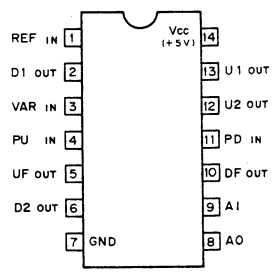

REF ; REFERENCE IN
VAR ; VARIABLE IN
U1 ; UP OUT 1
D1 ; DOWN OUT 1
U2 ; UP OUT 2
D2 ; DOWN OUT 2
PU ; CHARGE PUMP UP IN
PD ; CHARGE PUMP DOWN IN
UF ; CHARGE PUMP UP OUT
DF ; CHARGE PUMP DOWN OUT
AI ; FILTER AMP IN
AO ; FILTER AMP OUT

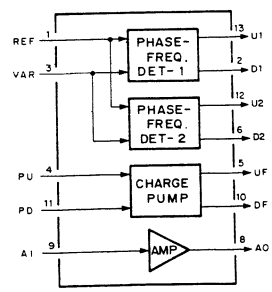

PHASE FREQ. DET-1
FALLING EDGE SENSING TYPE

INPUTS	OUTPUTS U1	OUTPUTS D1
fv = fR	1	1
Øv = ØR		
fv < fR	0	1
Øv lags ØR		
fv > fR	1	0
Øv leads ØR		

PHASE FREQ.DET-2
FOR 50% DUTY CYCLES

INPUTS REF	INPUTS VAR	OUTPUTS U2	OUTPUTS D2
0	0	1	1
0	1	1	1
1	0	0	1
1	1	1	0

0 ;LOW LEVEL
1 ;HIGH LEVEL

MC74HC86AF (MOTOROLA) FLAT PACKAGE
SN74HC86ANS (TI) FLAT PACKAGE
TC74HC86AF (TOSHIBA) FLAT PACKAGE

C-MOS QUAD EXCLUSIVE OR GATES
– TOP VIEW –

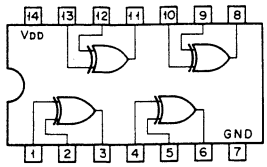

A	B	Y
0	0	0
0	1	1
1	0	1
1	1	0

0;LOW LEVEL
1;HIGH LEVEL

NOTE :

TYPE	VDD
TC74AC86 TYPE	+2 to +5.5V
OTHER TYPES	+2 to +6V

MSC62408 (OKI)

C-MOS SINGLE CHIP MICROCONTROLLER WITH FLT DRIVER
– TOP VIEW –

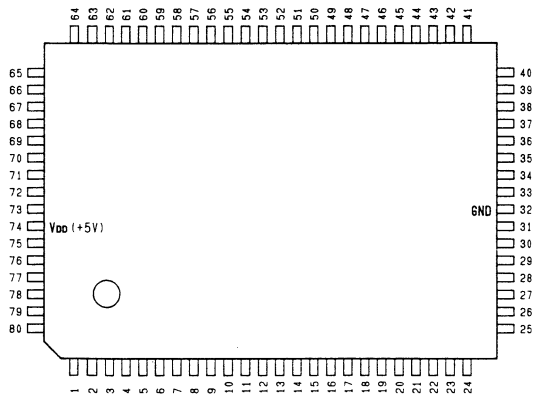

PIN No.	I/O	SIGNAL	PIN No.	I/O	SIGNAL	PIN No.	I/O	SIGNAL	PIN No.	I/O	SIGNAL
1	I/O	P36	21	I	TEST	41	O	T8/SEG31	61	O	SEG12
2	I/O	P37	22	I/O	P27	42	O	T9/SEG30	62	O	SEG11
3	I	P40	23	I/O	P26	43	O	T10/SEG29	63	O	SEG10
4	I	P41	24	I/O	P25	44	O	T11/SEG28	64	O	SEG9
5	I	P42	25	I/O	P24	45	O	T12/SEG27	65	O	SEG8
6	I	P43	26	I/O	P23	46	O	T13/SEG26	66	O	SEG7
7	I	P44	27	I/O	P22	47	O	T14/SEG25	67	O	SEG6
8	I	P45	28	I/O	P21	48	O	T15/SEG24	68	O	SEG5
9	I	P46	29	I/O	P20	49	I	VFLT	69	O	ESG4
10	I/O	P00	30	O	OSC1	50	O	SEG23	70	O	SEG3
11	I/O	P01/SCK	31	I	OSC0	51	O	SEG22	71	O	SEG2
12	I/O	P02/SO	32	–	GND	52	O	SEG21	72	O	SEG1
13	I/O	P03/SI	33	O	T0	53	O	SEG20	73	O	SEG0
14	I/O	P04/CIN	34	O	T1	54	O	SEG19	74	–	VDD
15	I/O	P05/TMO	35	O	T2	55	O	SEG18	75	I/O	P30
16	I/O	P06/TCK	36	O	T3	56	O	SEG17	76	I/O	P31
17	I/O	P07/RMC	37	O	T4	57	O	SEG16	77	I/O	P32
18	I	P10/INT0	38	O	T5	58	O	SEG15	78	I/O	P33
19	I	P12/INT1	39	O	T6	59	O	SEG14	79	I/O	P34
20	I	RESET	40	O	T7	60	O	SEG13	80	I/O	P35

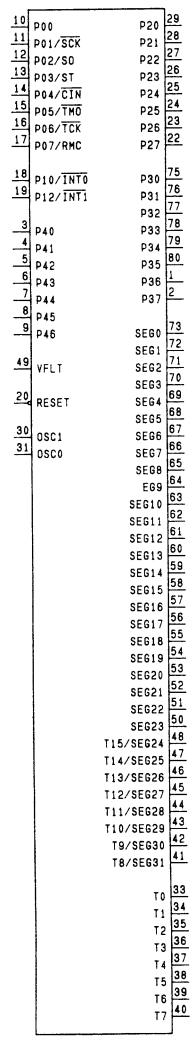

OSC0, OSC1 ; EXTERNAL CRYSTAL,
OSC0 : SYSTEM CLOCK INPUT.
P00 ; I/O PORT0
P01/SCK ; I/O PORT0/SERIAL CLOCK INPUT
P02/SO ; I/O PORT0/SERIAL DATA OUTPUT
P03/SI ; I/O PORT0/SERIAL DATA INPUT
P04/CIN ; I/O PORT0/COUNT INPUT
P05/TMO ; I/O PORT0/TIMER OUTPUT
P06/TCK ; I/O PORT0/TIMER CLOCK INPUT
P07/RMC ; I/O PORT0/REMOTE CONTROL INPUT
P10/INT0 ; INPUT PORT1/EXTERNAL INTERRUPT INPUT
P12/INT1 ; INPUT PORT1/EXTERNAL INTERRUPT INPUT
P20 – P27 ; INPUT/OUTPUT PORT2
P30 – P37 ; INPUT/OUTPUT PORT3
P40 – P47 ; INPUT PORT4
RESET ; SYSTEM RESET INPUT
SEG0 – SEG23 ; FLT SEGMENT DRIVE OUTPUT
SEG24/T15 – SEG31/T8 ; FLT SEGMENT DRIVE OUTPUT/TIMING OUTPUT
T0 – T7 ; TIMING SPACE OUTPUT
VFLT ; FLT DRIVING POWER SUPPLY

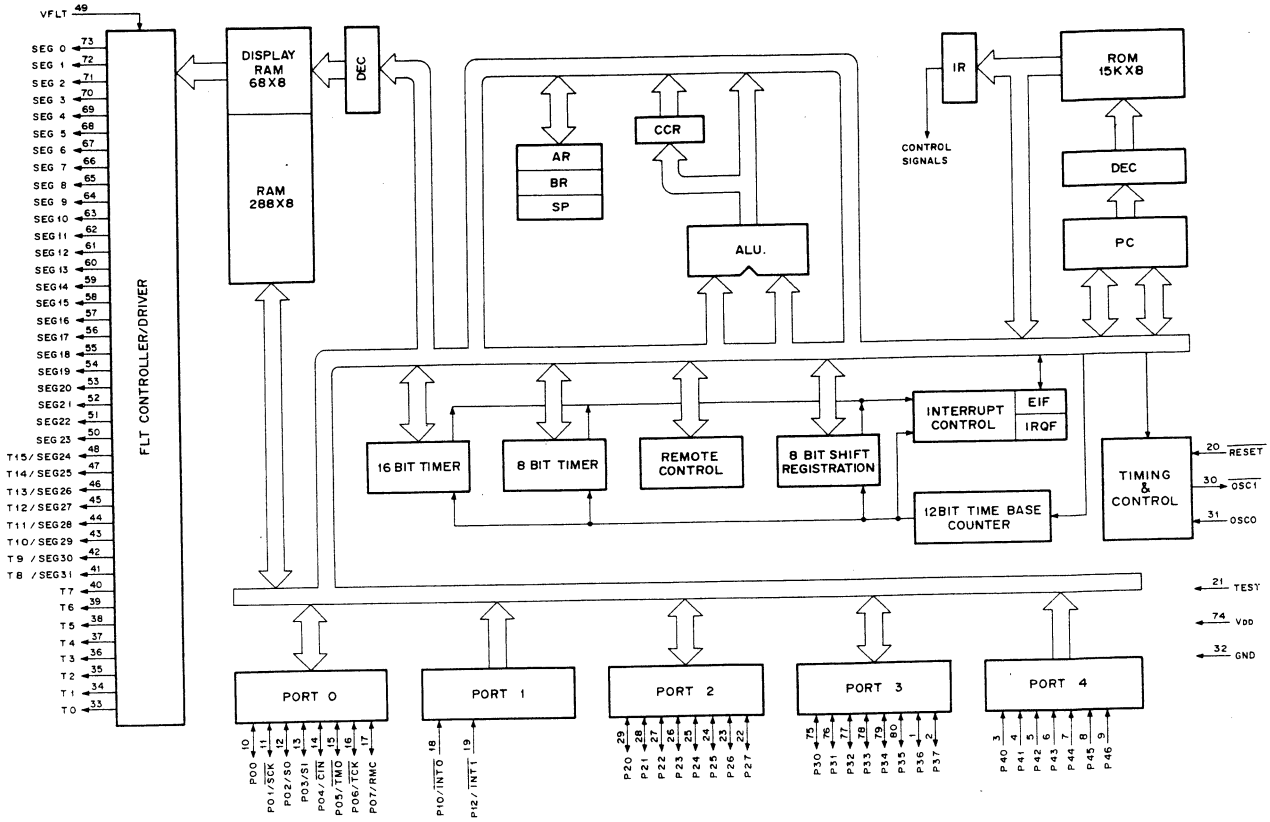

MSM6338MS-K (OKI)

C-MOS DIGITAL AUDIO PEAK LEVEL DETECTOR
– TOP VIEW –

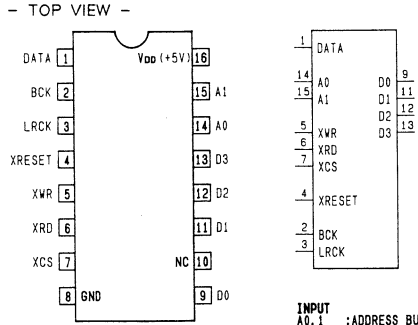

INPUT
A0, 1 ;ADDRESS BUS
BCK ;BIT CLOCK
DATA ;AUDIO SERIAL DATA
LRCK ;LR CLOCK
XCS ;CHIP SELECT
XRESET ;RESET
XRD ;DATA READ
XWR ;DATA WRITE

INPUT/OUTPUT
D0-4 ;DATA BUS

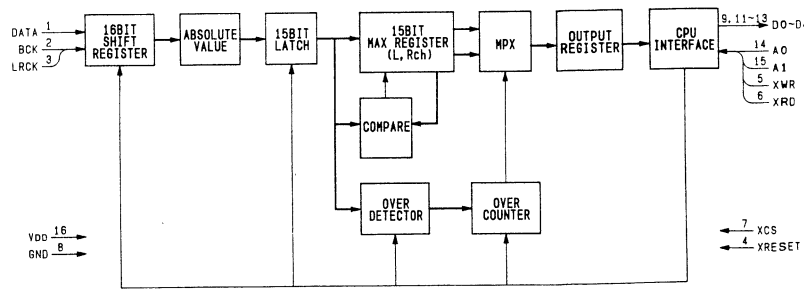

NE5532P (TI)

LOW NOISE OPERATIONAL AMPLIFIER
– TOP VIEW –

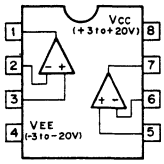

PALCE16V8H-25PC (AMD/MONOLITHIC MEMORIES)

C-MOS ELECTRICALLY ERASABLE PROGRAMMABLE LOGIC DEVICE
– TOP VIEW –

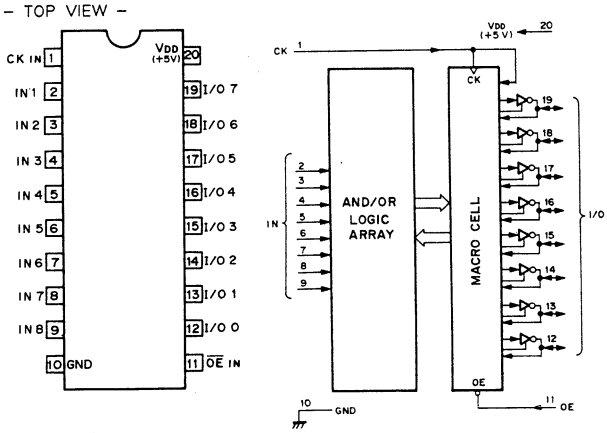

* ABOVE DIAGRAM SHOWS CONDITIONS BEFORE PROGRAMMING.

PCM61P-S-2 (BURR-BROWN)

SERIAL INPUT D/A CONVERTER FOR DIGITAL AUDIO
– TOP VIEW –

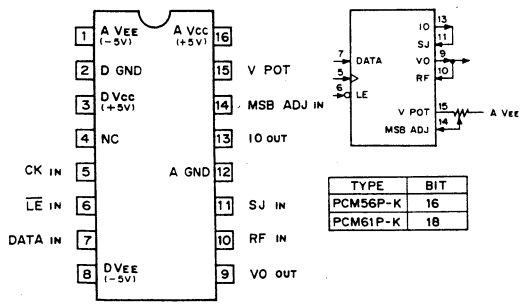

TYPE	BIT
PCM56P-K	16
PCM61P-K	18

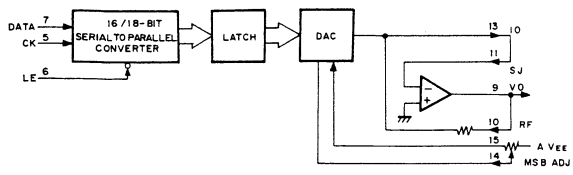

DATA ; SERIAL DATA INPUT MSB FIRST
BINARY 2's COMPLEMENT
CK ; CLOCK INPUT, ↓
LE ; LATCH ENABLE, ↓
IO ; CURRENT OUTPUT
SJ ; SUMMING JUNCTION
VO ; VOLTAGE OUTPUT
RF ; FEEDBACK RESISTOR
VPOT ; MSB TRIM POTENTIOMETER
MSB ADJ ; MSB ADJUSTMENT

DIGITAL INPUT BTC (HEX)		ANALOG OUTPUTS		
PCM56P-K	PCM61-K	DAC OUTPUT	VO (V)	IO (mA)
7FFF	7FFFFF	+FULL SCALE	+2.999908	-0.999970
8000	80003F	-FULL SCALE	-3.000000	+1.000000
0000	00003F	BIPOLAR ZERO	0.000000	0.000000
FFFF	FFFFFF	ZERO-1LSB	-0.000092	+0.030500 μA

BTC : BINARY TWO'S COMPLEMENT

RC4556S (RAYTHEON)

HIGH PERFORMANCE DUAL OPERATIONAL AMPLIFIER
– SIDE VIEW –

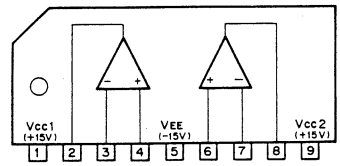

RC7805FA (RAYTHEON) + 5V
RC7815FA (RAYTHEON) + 15V
RC7818FA (RAYTHEON) + 18V

POSITIVE VOLTAGE REGULATOR
– FRONT VIEW –

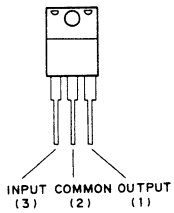

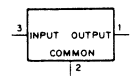

RC78L05A (RAYTHEON) + 5V

POSITIVE VOLTAGE REGULATOR (100mA)

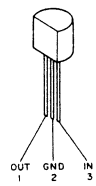

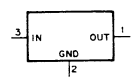

RC7905FA (RAYTHEON) – 5V
RC7915FA (RAYTHEON) – 15V
RC7918FA (RAYTHEON) – 18V

NEGATIVE VOLTAGE REGULATOR
– FRONT VIEW –

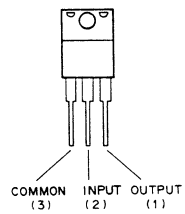

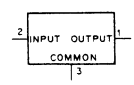

SM5813APS (NPC)

C-MOS AUDIO DIGITAL FILTER

– TOP VIEW –

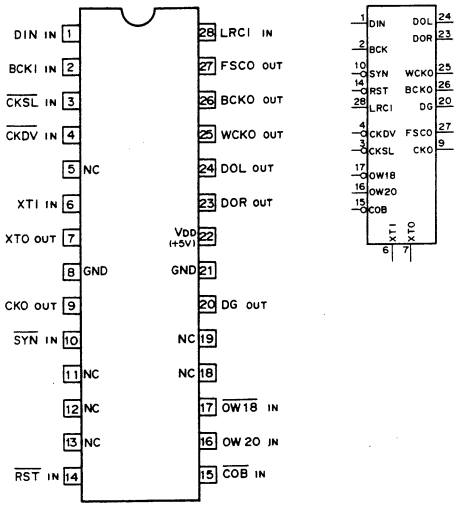

INPUT

BCKI	; INPUT DATA BIT CLOCK
CKDV, CKSL	; SYSTEM CLOCK SELECT
COB	; 2'S COMPLEMENT/COB SELECT (H : 2'S COMPLEMENT, L : COB)
DIN	; INPUT DATA
LRCI	; SYSTEM CLOCK (H : L-CH, L : R-CH)
OW18, 20	; OUTPUT BIT NUMBER SELECT

OUTPUT BIT	16	18	20
OW18	H	L	H
OW20	H	H	L

RST	; SYSTEM RESET (H : NORMAL, L : SYSTEM RESET)
SYN	; JITTER FREE/FORCED SYNCHRONIZATION SELECT (H : JITTER FREE, L : FORCED SYNCHRONIZATION)
XTI	; OSCILLATOR

XTI	125fs	256fs	384fs	512fs
CKSL	H	L	H	L
CKDV	H	H	L	L

OUTPUT

BCKO	; OUTPUT DATA BIT CLOCK
CKO	; SYSTEM CLOCK
DG	; DEGLITCH CONTROL CLOCK
DOL, DOR	; L, R DATA
FSCO	; DATA SAMPLING CLOCK
WCKO	; OUTPUT WORD CLOCK
XTO	; OSCILLATOR

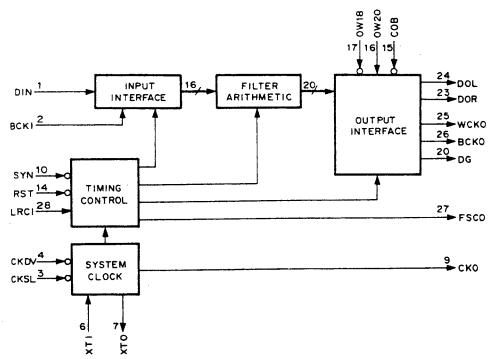

SN74HC00AN (TI)

SN74HC00ANS (TI) FLAT PACKAGE

C-MOS QUAD 2-INPUT NAND GATES

– TOP VIEW –

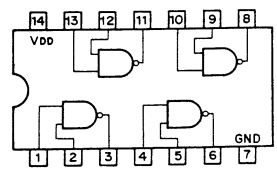

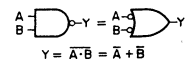

A	B	Y
0	0	1
0	1	1
1	0	1
1	1	0

0 ; LOW LEVEL
1 ; HIGH LEVEL

NOTE :

TYPE	VDD
TC74AC00 TYPE	+2 to +5.5V
MC74HCT00N	+5V
74ACT00 TYPE	+4.5 to +5.5V
OTHER TYPES	+2 to +6V

SN74HC04AN (TI)

SN74HC04ANS (TI) FLAT PACKAGE

SN74HCU04ANS (TI) FLAT PACKAGE

C-MOS HEX INVERTERS

– TOP VIEW –

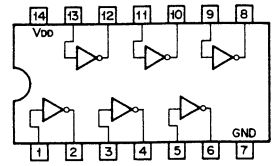

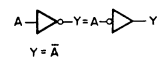

A	Y
0	1
1	0

0 : LOW LEVEL
1 : HIGH LEVEL

NOTE :

TYPE	VDD
74HCT04 TYPE	+5V
TC74AC04 TYPE	+2 to +5.5V
74ACT04 TYPE	+4.5 to +5.5V
OTHER TYPES	+2 to +6V

SN74HC08ANS (TI) FLAT PACKAGE

C-MOS QUAD 2-INPUT AND GATES

– TOP VIEW –

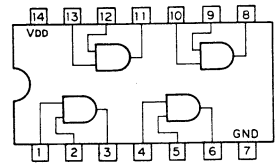

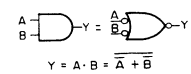

A	B	Y
0	0	0
0	1	0
1	0	0
1	1	1

0 ; LOW LEVEL
1 ; HIGH LEVEL

NOTE :

TYPE	VDD
TC74AC08F	+2 to +5.5V
OTHER TYPES	+2 to +6V

SN74HC125NS (TI) FLAT PACKAGE

C-MOS BUS BUFFER GATES WITH 3-STATE OUTPUT

– TOP VIEW –

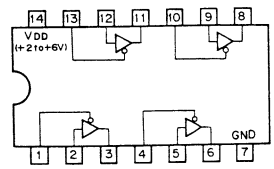

G	A	Y
0	0	0
0	1	1
1	X	HI-Z

0 ; LOW LEVEL
1 ; HIGH LEVEL
X ; DON'T CARE
HI-Z ; HIGH IMPEDANCE

SN74HC126NS (TI) FLAT PACKAGE

C-MOS BUS BUFFER GATE WITH 3-STATE OUTPUT
– TOP VIEW –

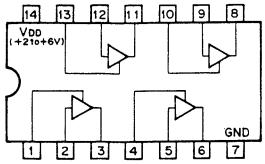

G	A	Y
1	1	1
1	0	0
0	X	HI-Z

0; LOW LEVEL
1; HIGH LEVEL
X; DON'T CARE
HI-Z; HIGH IMPEDANCE

SN74HC138ANS (TI) FLAT PACKAGE

C-MOS 3-TO-8 LINE DECODER/DEMULTIPLEXER
– TOP VIEW –

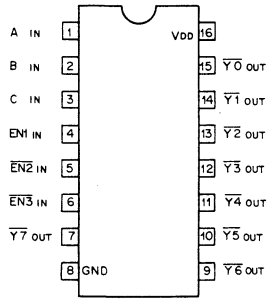

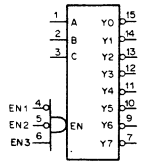

INPUTS				OUTPUTS							
EN	C	B	A	Y7	Y6	Y5	Y4	Y3	Y2	Y1	Y0
0	X	X	X	1	1	1	1	1	1	1	1
1	0	0	0	1	1	1	1	1	1	1	0
1	0	0	1	1	1	1	1	1	1	0	1
1	0	1	0	1	1	1	1	1	0	1	1
1	0	1	1	1	1	1	1	0	1	1	1
1	1	0	0	1	1	1	0	1	1	1	1
1	1	0	1	1	1	0	1	1	1	1	1
1	1	1	0	1	0	1	1	1	1	1	1
1	1	1	1	0	1	1	1	1	1	1	1

EN = $\overline{EN1} \cdot \overline{EN2} \cdot EN3$

0 ; LOW LEVEL
1 ; HIGH LEVEL
X ; DON'T CARE

NOTE :

TYPE	VDD
74HCT138 TYPE	+5V
74ACT138 TYPE	+4.5 to +5.5V
TC74AC138 TYPE	+2 to +5.5V
OTHER TYPES	+2 to +6V

SN74HC14ANS (TI) FLAT PACKAGE

C-MOS HEX SCHMITT TRIGGER INVERTERS
– TOP VIEW –

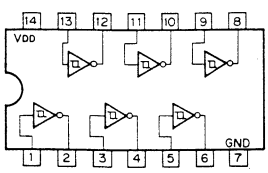

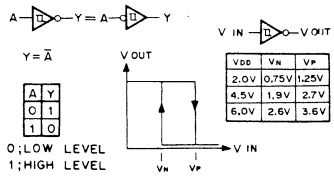

VDD	VN	VP
2.0V	0.75V	1.25V
4.5V	1.9V	2.7V
6.0V	2.6V	3.6V

NOTE :

TYPE	VDD
TC74AC14 TYPE	+2 to +5.5V
OTHER TYPES	+2 to +6V

SN74HC161AN (TI) (V_{DD} = + 2 to + 6V)

C-MOS SYNCHRONOUS PRESETTABLE 4-BIT BINARY COUNTER
– TOP VIEW –

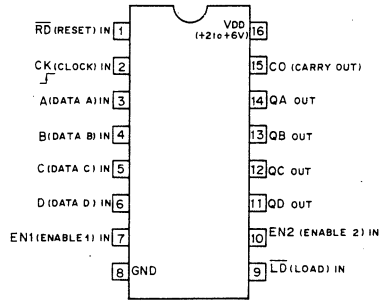

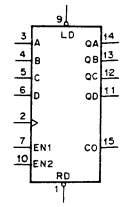

MODE SELECTION

CONTROL INPUTS				MODE
RD	LD	EN1	EN2	
0	X	X	X	RESET (ASYNCHRONOUS)
1	0	X	X	PRESET (SYNCHRONOUS)
1	1	0	X	NO COUNT
1	1	X	0	NO COUNT
1	1	1	1	COUNT

0; LOW LEVEL
1; HIGH LEVEL
X; DON'T CARE

CARRY OUTPUT "CO"

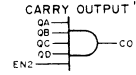

CO IS HIGH WHEN EN2 INPUT IS HIGH AND COUNT IS "15".

COUNT SEQUENCE

COUNT	OUTPUTS			
	QD	QC	QB	QA
0	0	0	0	0
1	0	0	0	1
2	0	0	1	0
3	0	0	1	1
4	0	1	0	0
5	0	1	0	1
6	0	1	1	0
7	0	1	1	1
8	1	0	0	0
9	1	0	0	1
10	1	0	1	0
11	1	0	1	1
12	1	1	0	0
13	1	1	0	1
14	1	1	1	0
15	1	1	1	1

SN74HC175ANS (TI) FLAT PACKAGE

C-MOS QUAD D-TYPE FLIP-FLOPS WITH RESET
– TOP VIEW –

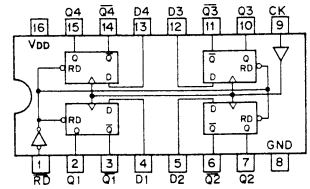

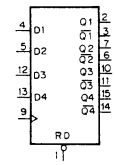

RD	CK	D	Q	$\overline{Q}$
0	X	X	0	1
1	↑	1	1	0
1	↑	0	0	1
1	0	X	Qo	$\overline{Qo}$

0 ; LOW LEVEL
1 ; HIGH LEVEL
X ; DON'T CARE
Qo ; NO CHANGE
$\overline{Qo}$; NO CHANGE

NOTE:

TYPE	VDD
TC74AC175F	+2 to +5.5V
74ACT175 TYPE	+4.5 to +5.5V
OTHER TYPES	+2 to +6V

SN74HC245ANS (TI) FLAT PACKAGE

C-MOS BILATERAL BUS TRANSCEIVERS WITH 3-STATE OUTPUTS
– TOP VIEW –

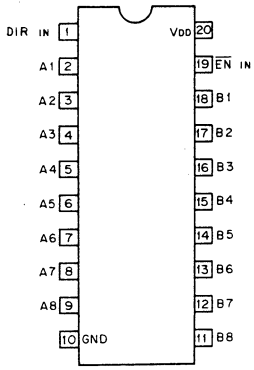

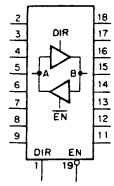

EN	DIR	OPERATION
0	0	B to A
0	1	A to B
1	X	HI-Z

0 ; LOW LEVEL
1 ; HIGH LEVEL
X ; DON'T CARE
HI-Z ; HIGH IMPEDANCE

NOTE :

TYPE	VDD
AC HC	+2 to +6V
ACT HCT	+5V
TC74AC245F TC74AC245P	+2 to +5.5V

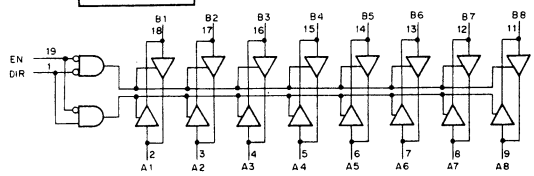

SN74HC32ANS (TI) FLAT PACKAGE

C-MOS QUAD 2-INPUT OR GATES
– TOP VIEW –

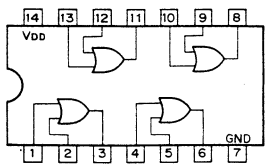

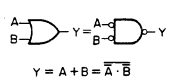

$Y = A + B = \overline{\overline{A} \cdot \overline{B}}$

A	B	Y
0	0	0
0	1	1
1	0	1
1	1	1

0 : LOW LEVEL
1 : HIGH LEVEL

NOTE :

TYPE	VDD
TC74AC32 TYPE	+2 to +5.5V
OTHER TYPES	+2 to +6V

SN74HC540ANS (TI) FLAT PACKAGE

C-MOS 3-STATE INVERTING BUFFER/LINE DRIVER/LINE RECEIVER
– TOP VIEW –

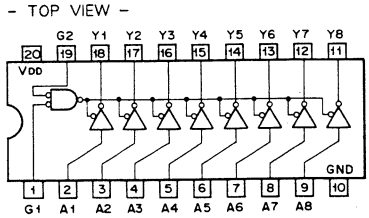

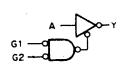

G1	G2	A	Y
0	0	0	1
0	0	1	0
1	X	X	HI-Z
X	1	X	HI-Z

0 ; LOW LEVEL
1 ; HIGH LEVEL
X ; DON'T CARE
HI-Z ; HIGH IMPEDANCE

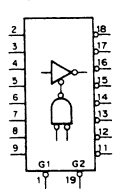

NOTE :

TYPE	VDD
TC74AC540F TC74AC540P	+5V
OTHER TYPES	+2 to +6V

SN74HC541ANS (TI) FLAT PACKAGE

C-MOS BUFFERS AND LINE DRIVERS WITH 3-STATE OUTPUTS
– TOP VIEW –

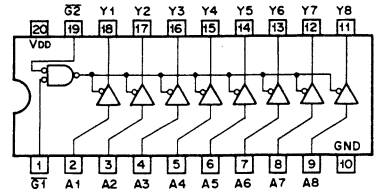

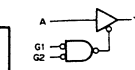

G1	G2	A	Y
0	0	0	0
0	0	1	1
1	X	X	HI-Z
X	1	X	HI-Z

0 ; LOW LEVEL
1 ; HIGH LEVEL
X ; DON'T CARE
HI-Z ; HIGH IMPEDANCE

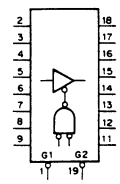

NOTE :

TYPE	VDD
AC	+2 to +5.5V
HC	+2 to +6V
ACT/HCT	+5V

SN74HC573BNS (TI) FLAT PACKAGE

C-MOS 3-STATE OUTPUTS OCTAL LATCHES
– TOP VIEW –

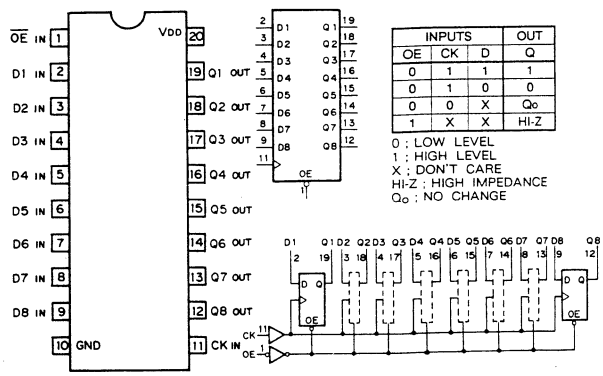

INPUTS			OUT
OE	CK	D	Q
0	↑	1	1
0	↑	0	0
0	0	X	Q_0
1	X	X	HI-Z

0 ; LOW LEVEL
1 ; HIGH LEVEL
X ; DON'T CARE
HI-Z ; HIGH IMPEDANCE
Q_0 ; NO CHANGE

NOTE :

TYPE	VDD
AC HC ACT HCT	+2 to +6V +5V
TC74AC573	+2 to +5.5V

SN74HC574ANS (TI) FLAT PACKAGE
TC74HC574F (TOSHIBA) FLAT PACKAGE

C-MOS 3-STATE D-TYPE EDGE-TRIGGERED FLIP-FLOP
– TOP VIEW –

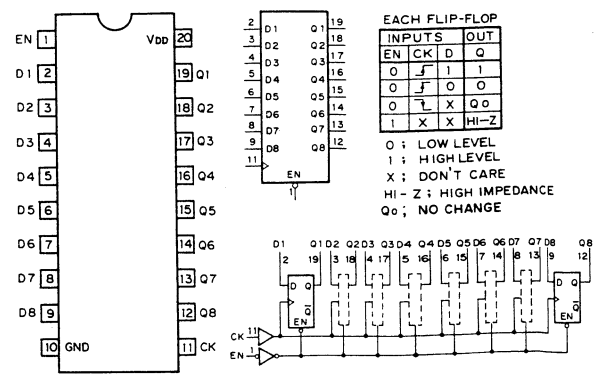

EACH FLIP-FLOP

INPUTS			OUT
EN	CK	D	Q
0	↑	1	1
0	↑	0	0
0	↓	X	Q_0
1	X	X	HI-Z

0 ; LOW LEVEL
1 ; HIGH LEVEL
X ; DON'T CARE
HI-Z ; HIGH IMPEDANCE
Q_0 ; NO CHANGE

NOTE :

TYPE	VDD
74AC/74HC	+2 to +6V
74ACT/74HCT	+5V
TC74AC574F	+2 to +5.5V

SN74HC74AN (TI)
SN74HC74ANS (TI) FLAT PACKAGE

C-MOS DUAL D-TYPE FLIP-FLOPS WITH DIRECT SET/RESET
– TOP VIEW –

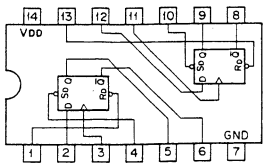

INPUTS				OUTPUTS	
$\overline{S_D}$	$\overline{R_D}$	CK	D	Qn+1	$\overline{Qn+1}$
0	1	X	X	1	0
1	0	X	X	0	1
0	0	X	X	1	1
1	1	↑	1	1	0
1	1	↑	0	0	1
1	1	0	X	Qn	$\overline{Qn}$

0 ; LOW LEVEL
1 ; HIGH LEVEL
X ; DON'T CARE

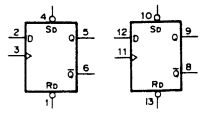

NOTE :

TYPE	VDD
TC74HCT74AF	+5V
TC74AC74 TYPE	+2 to +5.5V
74ACT74 TYPE	+4.5 to +5.5V
OTHER TYPES	+2 to +6V

SN74LS03NS (TI) FLAT PACKAGE

TTL 2-INPUT POSITIVE-NAND GATE WITH OPEN-COLLECTOR
– TOP VIEW –

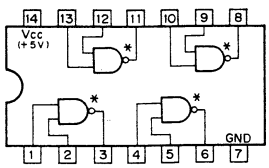

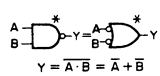

A	B	Y
0	0	1
0	1	1
1	0	1
1	1	0

0;LOW LEVEL
1;HIGH LEVEL

SN75121N (TI)

DUAL LINE DRIVERS
– TOP VIEW –

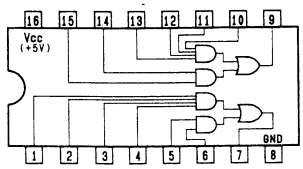

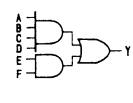

SN75124N (TI)

TRIPLE LINE RECEIVER
– TOP VIEW –

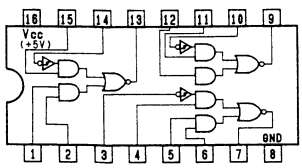

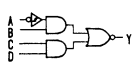

A	B	C	D	Y
X	X	1	1	0
0	1	X	X	0
1	X	0	X	1
X	0	0	X	1
1	X	X	0	1
X	0	X	0	1

0 ; LOW LEVEL
1 ; HIGH LEVEL
X ; DON'T CARE

TC74HC123AF (TOSHIBA) FLAT PACKAGE

C-MOS DUAL RETRIGGERABLE MONOSTABLE MULTIVIBRATORS
– TOP VIEW –

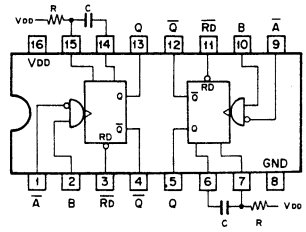

INPUT			OUTPUT	
$\overline{RD}$	A	B	Q	$\overline{Q}$
0	X	X	0	1
1	1	X	0	1
1	X	0	0	1
1	0	↓	⊓	⊔
1	↑	1	⊓	⊔
↓	0	1	⊓	⊔

0 ; LOW LEVEL
1 ; HIGH LEVEL
X ; DON'T CARE

OUTPUT PULSE WIDTH = 0.46CR

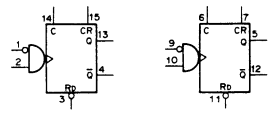

NOTE :

TYPE	VDD
TC74HCT123AF	+5V
OTHER TYPES	+2 to +6V

TC74HC4051AF (MOTOROLA) FLAT PACKAGE

C-MOS 8-CHANNEL ANALOG MULTIPLEXER/DEMULTIPLEXER
– TOP VIEW –

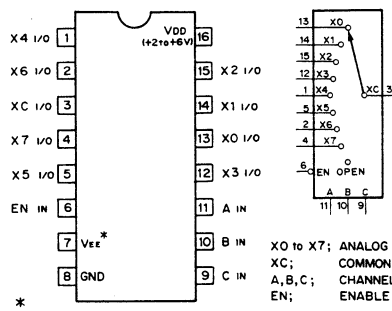

CONTROL INPUTS				SELECTED CHANNEL
EN	SELECT C	SELECT B	SELECT A	
0	0	0	0	X0
0	0	0	1	X1
0	0	1	0	X2
0	0	1	1	X3
0	1	0	0	X4
0	1	0	1	X5
0	1	1	0	X6
0	1	1	1	X7
1	X	X	X	OPEN

0; LOW LEVEL
1; HIGH LEVEL
X; DON'T CARE

XO to X7; ANALOG INPUTS/OUTPUTS
XC; COMMON INPUT/OUTPUT
A,B,C; CHANNEL SELECT INPUT
EN; ENABLE INPUT

* VEE ; VDD – VEE = +3 to +12V

TC74HC4052AF (TOSHIBA) FLAT PACKAGE

C-MOS DUAL 4-CHANNEL ANALOG MULTIPLEXER/DEMULTIPLEXER
– TOP VIEW –

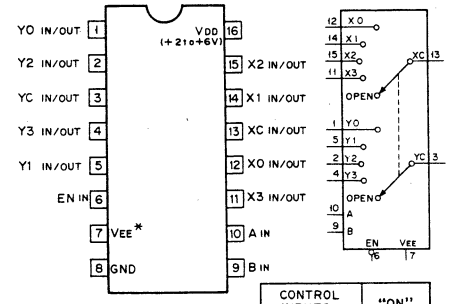

VEE* ; VDD – VEE = +3 to +12 V

CONTROL INPUTS B	CONTROL INPUTS A	"ON" CHANNEL
0	0	0
0	1	1
1	0	2
1	1	3
X	X	OPEN

0; LOW LEVEL
1; HIGH LEVEL
X; DON'T CARE.

TD62381P (TOSHIBA)

OCTAL LOW SATURATION DRIVER

- TOP VIEW -

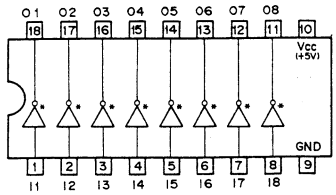

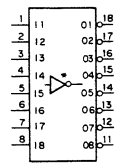

*; OPEN COLLECTOR

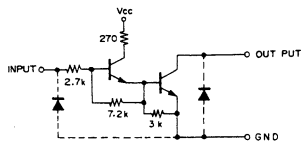

TLC274CNS (TI) FLAT PACKAGE

C-MOS OPERATIONAL AMPLIFIER

- TOP VIEW -

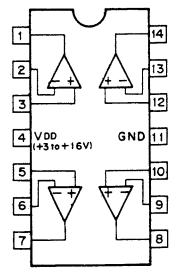

TL431CPS (TI) FLAT PACKAGE

ADJUSTABLE PRECISION SHUNT REGULATOR

- TOP VIEW -

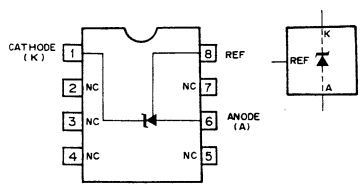

TL7705ACPS (TI) FLAT PACKAGE

TL7705CPS-B (TI) FLAT PACKAGE

POWER VOLTAGE SUPERVISOR

- TOP VIEW -

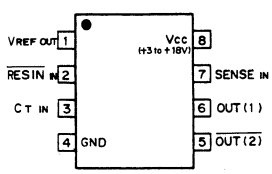

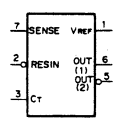

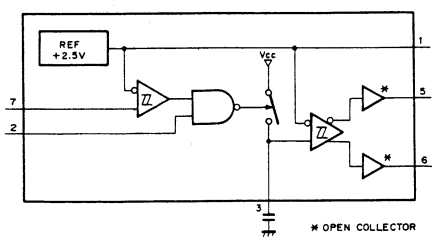

TLC272CPS (TI) FLAT PACKAGE

OPERATIONAL AMPLIFIER

- TOP VIEW -

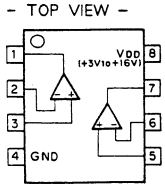

TMP82C79P-2 (TOSHIBA)

C-MOS PROGRAMABLE KEY-BOARD/DISPLAY INTERFACE DEVICE
– TOP VIEW –

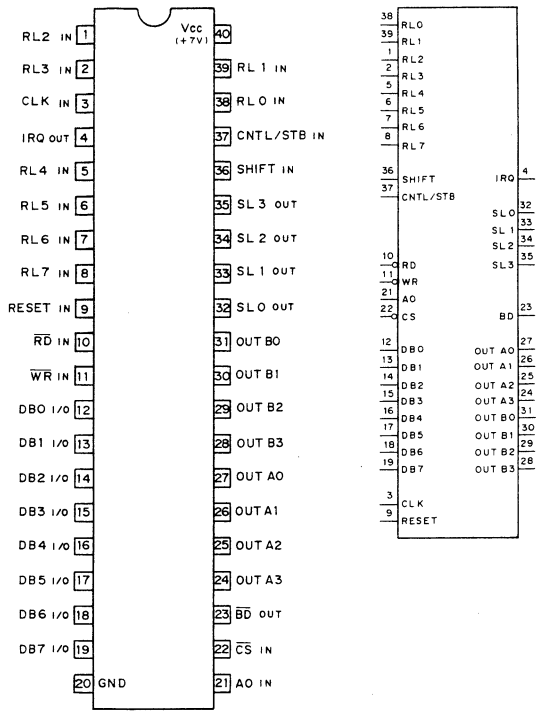

AO ; COMMAND/DATA CONTROL INPUT
$\overline{BD}$; DISPLAY BLANKING OUTPUT
CLK ; CLOCK INPUT
CNTL/$\overline{STB}$; CONTROL/STROBE INPUT
$\overline{CS}$; CHIP SELECT INPUT
DB0-DB7 ; DATA BUS INPUT/OUTPUT
IRQ ; INTERRUPT REQUEST OUTPUT
OUT A0-A3 ; 16x4 BIT EXPRESSION REFRESH REGISTER
OUT B0-B3
$\overline{RD}$; READ STROBE INPUT
RESET ; RESET INPUT
RL0-RL7 ; RETURN LINE INPUT
SHIFT ; SHIFT INPUT
SL0-$\overline{SL3}$; SCANNING LINE OUTPUT
$\overline{WR}$; WRITE STROBE INPUT

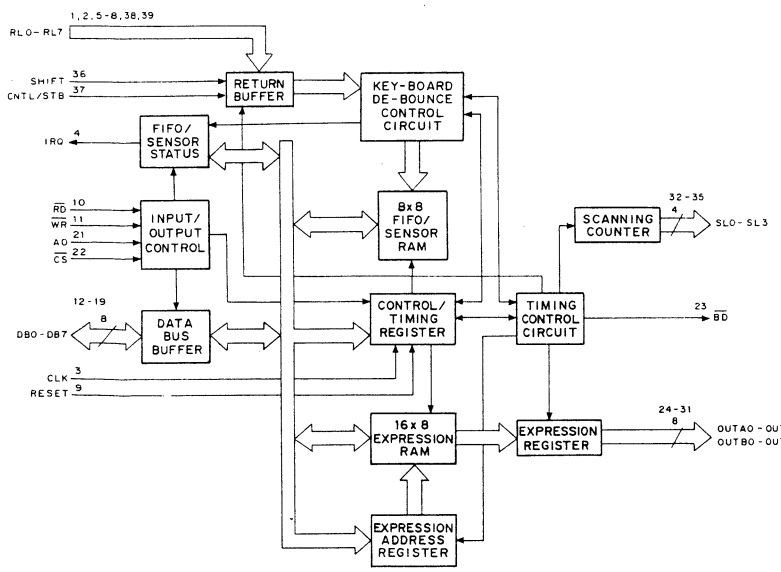

READ

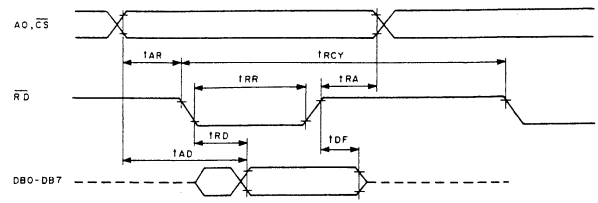

WRITE

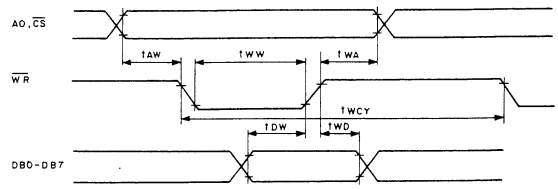

CLOCK

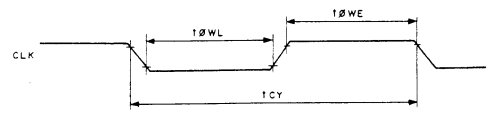

SCANNING

ENCODE

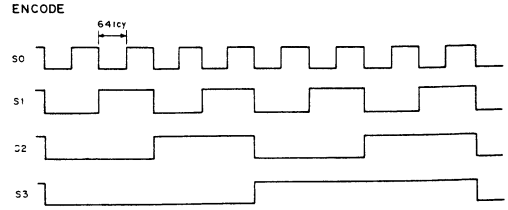

DECODE

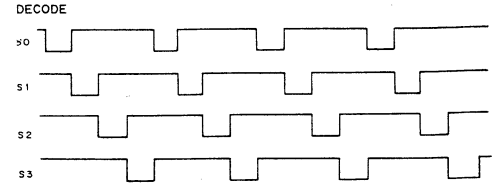

EXPRESSION

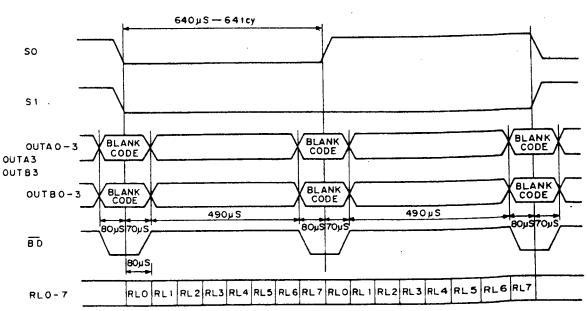

TMS44C256-10SDL (TI) (ACCESS TIME = 100nS)

C-MOS 1,048,576-BIT (262,144x4) DYNAMIC RAM

- SIDE VIEW -

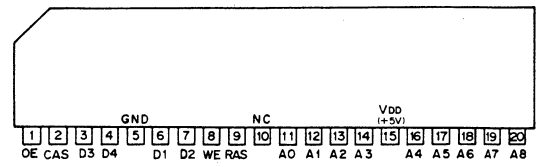

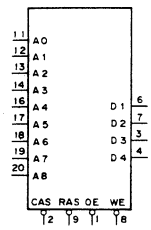

A0–A8	;	ADDRESS INPUT
CAS	;	COLUMN ADDRESS STROBE
D1–D4	;	DATA IN/OUT
OE	;	OUTPUT ENABLE
RAS	;	ROW ADDRESS STROBE
WE	;	WRITE ENABLE

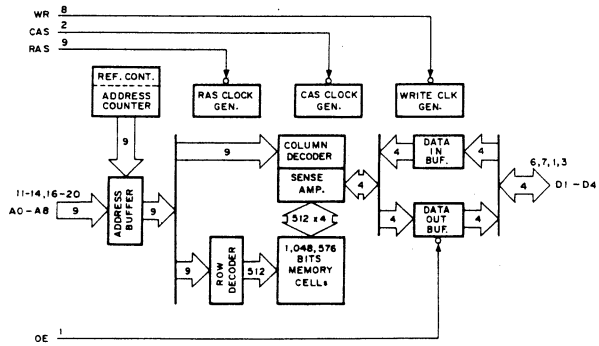

UPC78L05 (NEC) + 5V

POSITIVE VOLTAGE REGULATOR (100mA)

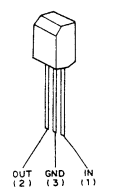

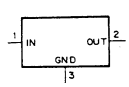

UPD43256AGU-10LL (NEC)

C-MOS 262144-BIT (32768x8) STATIC RAM

- TOP VIEW -

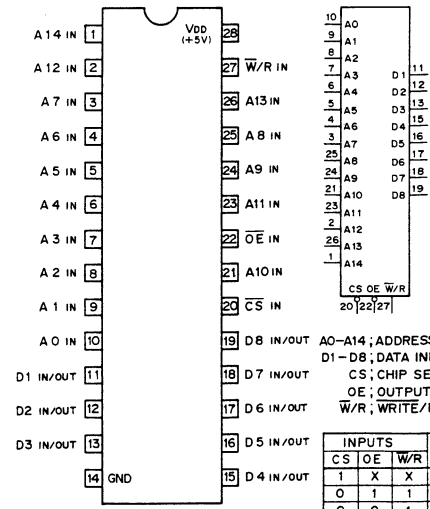

A0–A14 ; ADDRESS INPUTS
D1–D8 ; DATA INPUTS/OUTPUTS
CS ; CHIP SELECT INPUT
OE ; OUTPUT ENABLE INPUT
W/R ; WRITE/READ INPUT

INPUTS			MODE	OUTPUT STATUS
CS	OE	W/R		
1	X	X	NO SELECTION	HI-Z
0	1	1	OUTPUT DISABLE	
0	0	1	READ	D OUT
0	X	0	WRITE	D IN

0 ; LOW LEVEL X ; DON'T CARE
1 ; HIGH LEVEL HI-Z ; HIGH IMPEDANCE

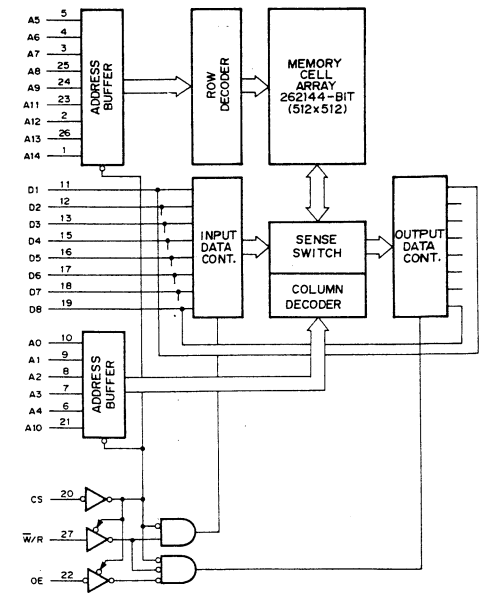

UPD4702G (NEC)

C-MOS INCREMENTAL ENCODER 8BIT UP DOWN COUNTER
– TOP VIEW –

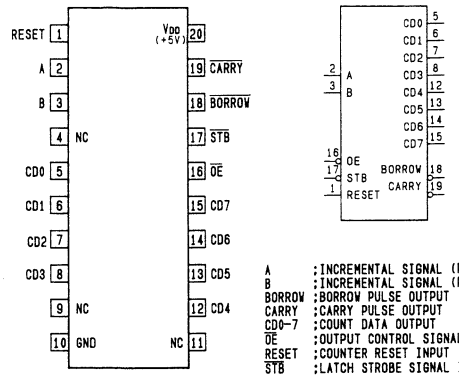

A ;INCREMENTAL SIGNAL (PHASE A) INPUT
B ;INCREMENTAL SIGNAL (PHASE B) INPUT
BORROW ;BORROW PULSE OUTPUT
CARRY ;CARRY PULSE OUTPUT
CD0–7 ;COUNT DATA OUTPUT
$\overline{OE}$;OUTPUT CONTROL SIGNAL INPUT
RESET ;COUNTER RESET INPUT
$\overline{STB}$;LATCH STROBE SIGNAL INPUT

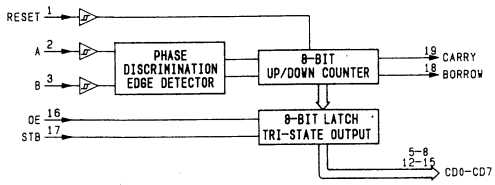

UPD70216L-10 (NEC) (CLOCK FREQUENCY ; 10MHz)

C-MOS 16 BIT MICROPROCESSOR
– TOP VIEW –

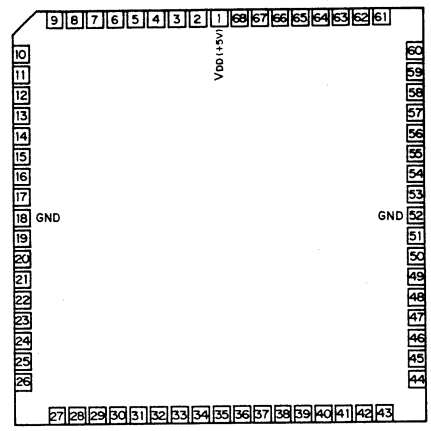

PIN NO.	FUNCTION	PIN NO.	FUNCTION	PIN NO.	FUNCTION	PIN NO.	FUNCTION
1	VDD (+5V)	18	GND	35	DMAAK3/TxD	52	GND
2	RES OUT	19	AD7	36	INTAK/SRDY/TOUT1	53	X2
3	HLDAK	20	AD6	37	INTP1	54	X1
4	HLDRQ	21	AD5	38	INTP2	55	CLK OUT
5	$\overline{REFRQ}$	22	AD4	39	INTP3	56	$\overline{BUFEN}$
6	A19/PS3	23	AD3	40	INTP4	57	BUFR/W
7	A18/PS2	24	AD2	41	INTP5	58	$\overline{BUSLOCK}$
8	A17/PS1	25	AD1	42	INTP6	59	$\overline{IOWR}$
9	A16/PS0	26	AD0	43	INTP7	60	$\overline{MWR}$
10	AD15	27	$\overline{END/TC}$	44	TCLK	61	$\overline{IORD}$
11	AD14	28	DMARQ0	45	TOUT2	62	$\overline{MRD}$
12	AD13	29	$\overline{DMAAK0}$	46	TCTL2	63	BS0
13	AD12	30	DMARQ1	47	$\overline{POLL}$	64	BS1
14	AD11	31	$\overline{DMAAK1}$	48	QS1	65	BS2
15	AD10	32	DMARQ2	49	QS0	66	NM1
16	AD9	33	$\overline{DMAAK2}$	50	ASTB	67	READY
17	AD8	34	DMARQ3/RxD	51	$\overline{UBE}$	68	$\overline{RESET}$

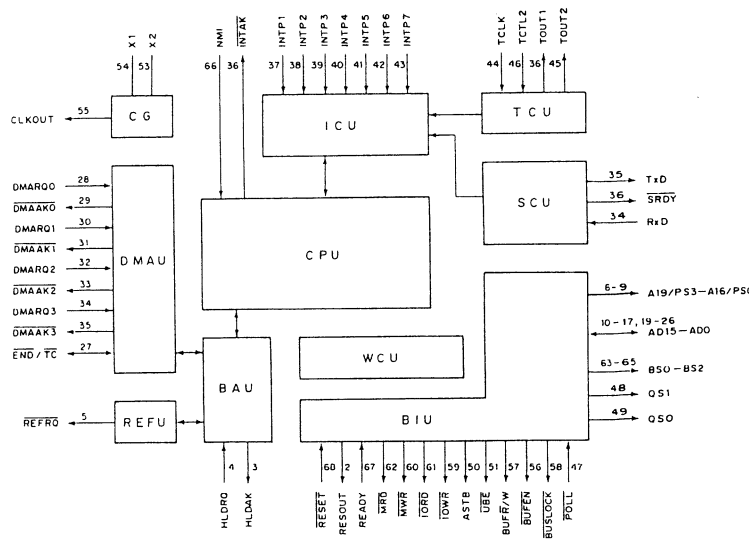

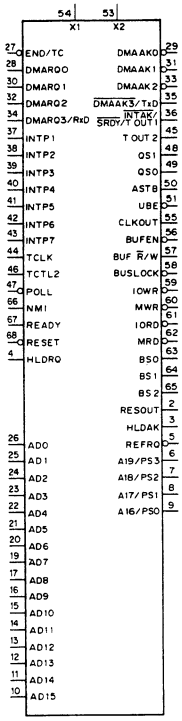


```
A16/PS0-A19/PS3      (O) ; ADDRESS/PROCESSOR STATUS
AD0-AD15            (I/O) ; ADDRESS BUS/DATA BUS
ASTB                 (O) ; ADDRESS STROBE
BS0-BS2              (O) ; BUS STATUS
BUFEN                (O) ; BUFFER ENABLE
BUF R/W              (O) ; BUFFER READ/WRITE
BUSLOCK              (O) ; BUS LOCK
CLKOUT               (O) ; CLOCK OUTPUT
DMAAK0-2             (O) ; DMA ACKNOWLEDGE 0 — 2
DMAAK3/TxD           (O) ; DMA ACKNOWLEDGE3/TRANSMIT DATA
DMARQ0-2             (I) ; DMA REQUEST 0-2
DMARQ3/RxD           (I) ; DMA REQUEST/RECEIVE DATA
END/TC              (I/O) ; END/TERMINAL COUNT
HLDAK                (O) ; BUS HOLD ACKNOWLEDGE
HLDRQ                (I) ; BUS HOLD REQUEST
INTAK/SRDY/TOUT1     (O) ; INTERRUPT ACKNOWLEDGE/SERIAL
                           READY/TIMER OUT 1
INTP0-INTP7          (I) ; INTERRUPT REQUEST FROM
                           PERIPHERAL 0 — 7
IORD                 (O) ; I/O READ STROBE
IOWR                 (O) ; I/O WRITE STROBE
MRD                  (O) ; MEMORY READ STROBE
MWR                  (O) ; MEMORY WRITE STROBE
NMI                  (I) ; NON MASKABLE INTERRUPT
POLL                 (I) ; POLL
QS0,QS1              (O) ; QUEUE STATUS
READY                (I) ; READY
REFRQ                (O) ; REFRESH REQUEST
RESET                (I) ; RESET
RES OUT              (O) ; SYSTEM RESET
TCLK                 (I) ; TIMER CLOCK
TCTL2                (I) ; TIMER CONTROL 2
TOUT2                (O) ; TIMER OUT 2
UBE                  (O) ; UPPER BYTE ENABLE
X1,2                 (I) ; CRYSTAL 1,2
```

UPD71051GB-10-3B4 (NEC) FLAT PACKAGE

C-MOS SERIAL CONTROLLER

– TOP VIEW –

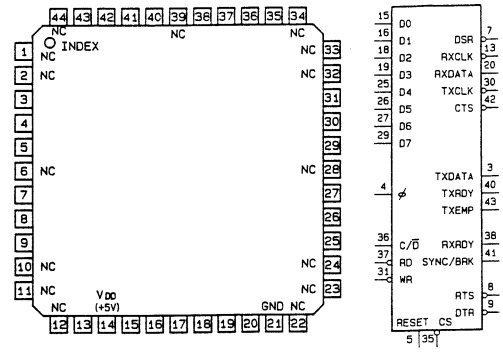

PIN NO.	I/O	SYMBOL	PIN NO.	I/O	SYMBOL	PIN NO.	I/O	SYMBOL	PIN NO.	I/O	SYMBOL
1	—	NC	12	—	NC	23	—	NC	34	—	NC
2	—	NC	13	I	RXCLK	24	—	NC	35	I	CS
3	O	TXDATA	14	—	VDD (+5V)	25	I/O	D4	36	I	C/D
4	I	CK	15	I/O	D0	26	I/O	D5	37	I	RD
5	I	RESET	16	I/O	D1	27	I/O	D6	38	O	RXRDY
6	—	NC	17	—	IC	28	—	NC	39	—	NC
7	I	DSR	18	I/O	D2	29	I/O	D7	40	O	TXRDY
8	O	RTS	19	I/O	D3	30	I	TXCLK	41	I/O	SYNC/BRK
9	O	DTR	20	I	RXDATA	31	I	WR	42	I	CTS
10	—	NC	21	—	GND	32	—	NC	43	O	TXEMP
11	—	NC	22	—	NC	33	—	NC	44	—	NC

```
CS      ; CHIP SELECT INPUT              TXRDY   ; TRANSMIT READY OUTPUT
CTS     ; CLEAR TO SEND OUTPUT           RD      ; READ STROBE INPUT
C/D     ; CONTROL/DATA SELECT INPUT      RESET   ; RESET INPUT
D0-D7   ; DATA INPUTS/OUTPUTS            RTS     ; REQUEST TO SEND OUTPUT
DSR     ; DATA SET READY INPUT           RXCLK   ; RECEIVER CLOCK INPUT
DTR     ; DATA TERMINAL READY OUTPUT     RXDATA  ; RECEIVE DATA INPUT
TXCLK   ; TRANSMITTER CLOCK INPUT        RXRDY   ; RECEIVER READY OUTPUT
TXDATA; TRANSMIT DATA OUTPUT             SYNC/BRK; SYNCHRONIZATION/BREAK INPUT/OUTPUT
TXEMP   ; TRANSMITTER EMPTY OUTPUT       WR      ; WRITE STROBE INPUT
```

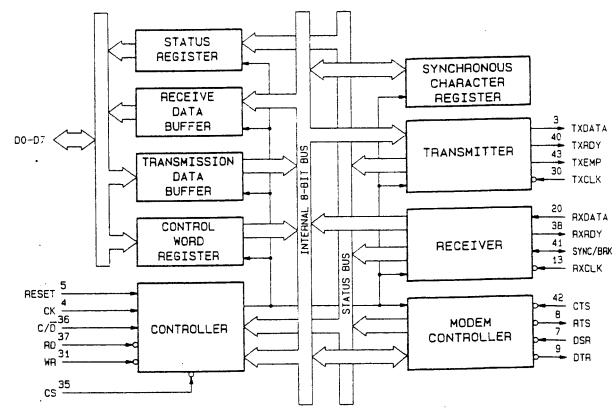

UPD71054GB-10-3B4 (NEC) FLAT PACKAGE

C-MOS PROGRAMMABLE TIMER COUNTER

– TOP VIEW –

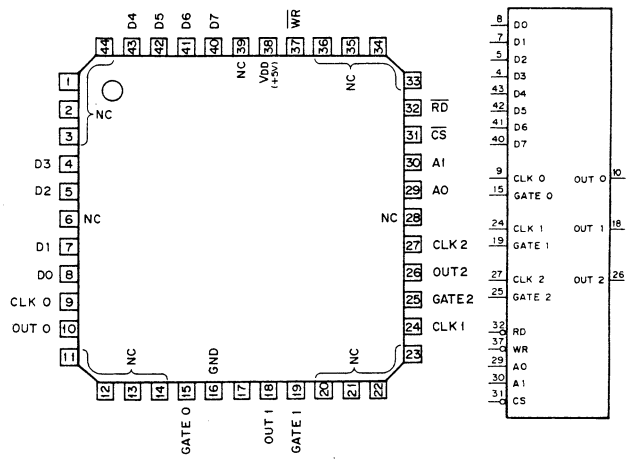

FUNCTION TABLE

INPUTS					FUNCTION
CS	RD	WR	A1	A0	
0	1	0	0	0	COUNTER NO. 1 WRITE
0	1	0	0	1	COUNTER NO. 2 WRITE
0	1	0	1	0	COUNTER NO. 3 WRITE
0	1	0	1	1	CONTROL WORD WRITE
0	0	1	0	0	COUNTER NO. 1 READ
0	0	1	0	1	COUNTER NO. 2 READ
0	0	1	1	0	COUNTER NO. 3 READ
0	0	1	1	1	NO-OPERATION (HI-Z)
1	X	X	X	X	DISABLE (HI-Z)
0	1	1	X	X	NO-OPERATION (HI-Z)

A1,A0 ; SELECTED READ/WRITE OPERATION
CLK n ; COUNTER CLOCK INPUT n
CS ; CHIP SELECT
D7-D0 ; 8-BIT DATA I/O
GATE n; COUNTER GATE INPUT n
IC ; INTERNALLY CONNECTED
OUT n ; COUNTER CLOCK OUTPUT n
RD ; READ COUNTER/STATUS
WR ; WRITE COMMAND/DATA

0;LOW LEVEL
1;HIGH LEVEL
X;DON'T CARE
HI-Z;HIGH IMPEDANCE

CONTROL WORD FORMAT

D7	D6	D5	D4	D3	D2	D1	D0
SC1	SC0	RWM1	RWM0	CM2	CM1	CM0	BCD

BCD : BINARY CODED DECIMAL

BCD	COUNTER OPERATION
0	16-BIT BINARY COUNT
1	4-FIGURE BCD COUNT

CM2	CM1	CM0	COUNTER MODE
0	0	0	MODE 0
0	0	1	MODE1
X	1	0	MODE 2
X	1	1	MODE 3
1	0	0	MODE 4
1	0	1	MODE 5

RWM1	RWM0	READ/WRITE MODE
0	0	COUNTER LATCHING CMD.
0	1	LSB ONLY
1	0	MSB ONLY
1	1	LSB FIRST THEN MSB

SC1	SC0	OPERATION
0	0	SELECTED COUNTER No.0
0	1	SELECTED COUNTER No.1
1	0	SELECTED COUNTER No.2
1	1	MULTIPLE LATCH COMMAND

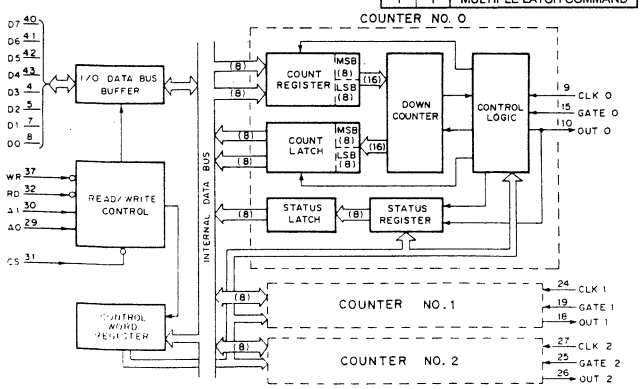

UPD71059GB-10-3B4 (NEC) FLAT PACKAGE

C-MOS INTERRUPT CONTROL UNIT

– TOP VIEW –

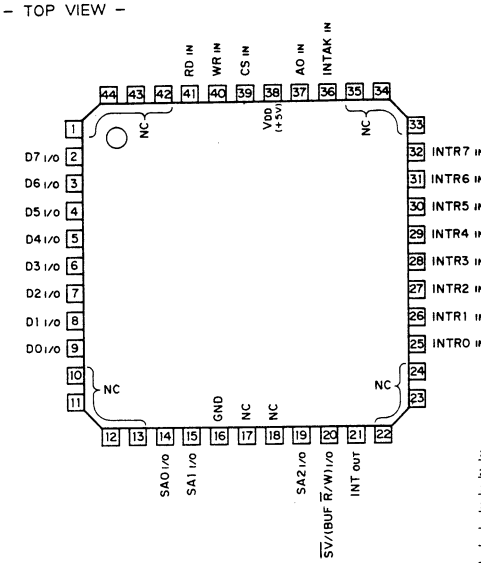

INTR0-INTR7 ; INTERRUPT REQUEST INPUTS
D0-D7 ; DATA BUS INPUTS/OUTPUTS
CS ; CHIP SELECT INPUT
RD ; READ STROBE INPUT
WR ; WRITE STROBE INPUT
AO ; ADDRESS INPUT
INT ; INTERRUPT OUTPUT
INTAK ; INTERRUPT ACKNOWLEDGE INPUT
$\overline{SV}$/(BUF$\overline{R}$/W) ; CONTROLLED/BUFFER READ/WRITE INPUT/OUTPUT
SA0-SA2 ; CONTROLLED ADDRESS INPUTS/OUTPUTS

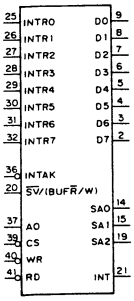

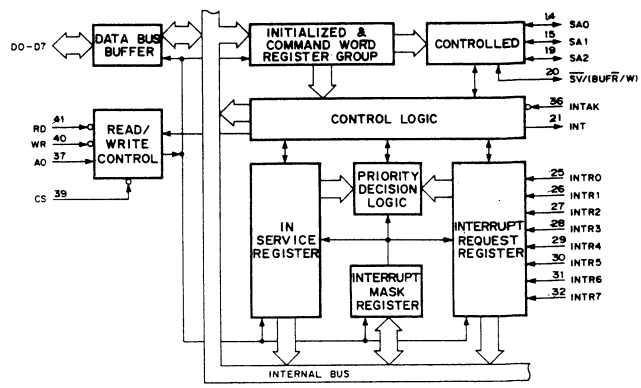

UPD78C11ACW-F08 (NEC)

C-MOS SINGLE CHIP 8-BIT MICROPROCESSOR WITH A/D CONVERTER
- TOP VIEW -

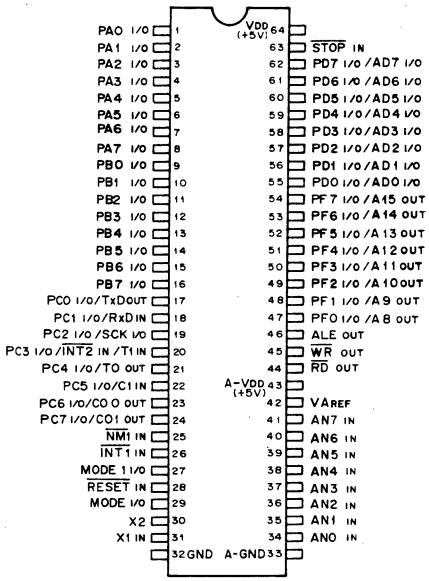

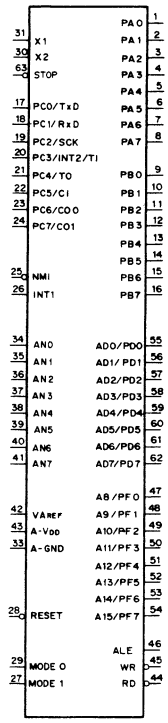


```
ALE         ;ADDRESS LATCH ENABLE OUTPUT
AN0-7       ;ANALOG INPUT
INT1        ;MASKABLE INTERRUPT REQUEST 1 INPUT
MODE 0      ;MEMORY MODE 0 INPUT/OUTPUT
MODE 1      ;MEMORY MODE 1 INPUT/OUTPUT
NMI         ;NON-MASKABLE INTERRUPT REQUEST INPUT
PA0-7       ;INPUT/OUTPUT PORT A
PB0-7       ;INPUT/OUTPUT PORT B
PC0/TXD     ;I/O PORT C BIT0 / SERIAL DATA OUTPUT
PC1/RXD     ;I/O PORT C BIT1 / SERIAL DATA INPUT
PC2/SCK     ;I/O PORT C BIT2 / SERIAL CLOCK I/O
PC3/INT2/TI ;I/O PORT C BIT3 / MASKABLE INTERRUPT REQUEST2 IN/TIMER INPUT
PC4/TO      ;I/O PORT C BIT4 / TIMER OUTPUT
PC5/CI      ;I/O PORT C BIT5 / COUNTER INPUT
PC6/CO 0    ;I/O PORT C BIT6 / COUNTER OUTPUT 0
PC7/CO 1    ;I/O PORT C BIT7 / COUNTER OUTPUT 1
PD0-7/AD0-7 ;I/O PORT D / ADDRESS / DATA BUS
PF0-7/A8-15 ;I/O PORT F / ADDRESS BUS
RESET       ;SYSTEM RESET INPUT
RD          ;READ STROBE OUTPUT
STOP        ;SYSTEM STOP INPUT
VAREF       ;REFERENCE VOLTAGE
WR          ;WRITE STROBE OUTPUT
X1, X2      ;EXTERNAL CRYSTAL, X1:SYSTEM CLOCK INPUT
```

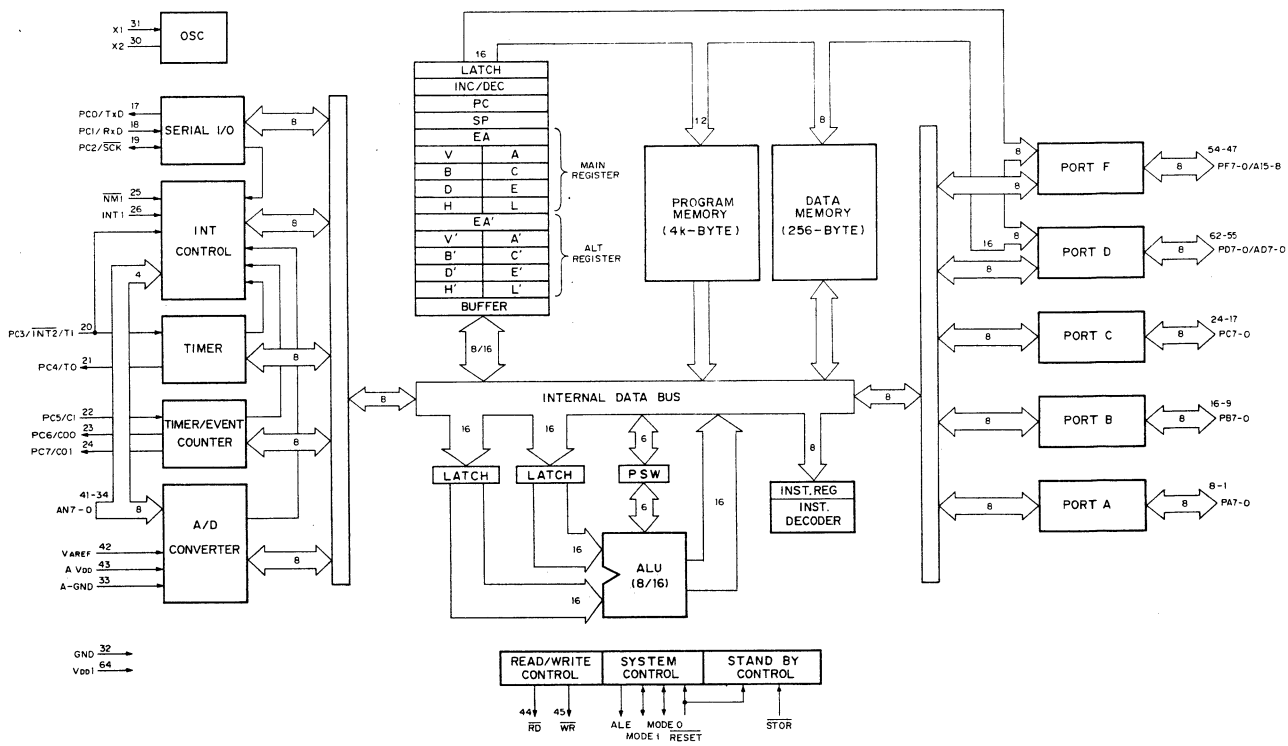

TRANSISTOR

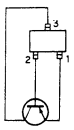

2SA1162Y

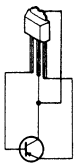

2SA1242

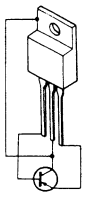

2SA985A

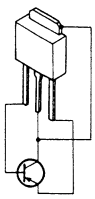

2SB1040A
2SB906

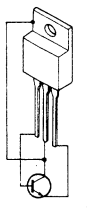

2SC2275A

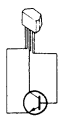

2SC2458

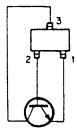

2SC2712Y

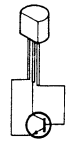

2SC2855

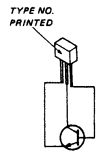

2SD1020

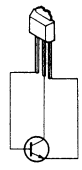

2SD1221

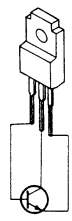

2SD1266

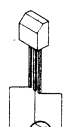

2SD773

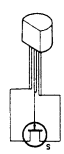

2SK170

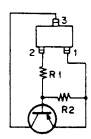

DTA114EK (R1 = 10K, R2 = 10K)
DTA143EK (R1 = 4.7K, R2 = 4.7K)
DTA143TK (R1 = 4.7K, R2 = ∞)

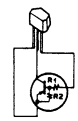

DTA124ES (R1 = 22K, R2 = 22K)

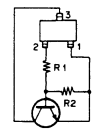

DTC124EK (R1 = 22K, R2 = 22K)
DTC143TK (R1 = 4.7K, R2 = ∞)

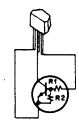

DTC124ES (R1 = 22K, R2 = 22K)
DTC143TS (R1 = 4.7K, R2 = OPEN)

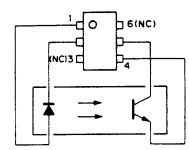

PS2604

DIODE

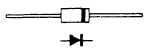

10E-2
10E2N
1SS119
RK14
SLR-34PG5

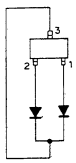

1S2837

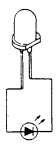

BR3432S ; RED
EBG3432S ; GREEN
EBG5734S ; GREEN
PY3432S ; YELLOW
PY5734S ; YELLOW

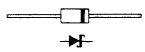

ERA81-004
ERC81-004

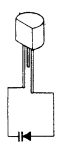

FC52M
FC53M

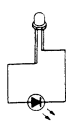

GL-3HY8 ; YELLOW
TLG124A ; GREEN
TLR124 ; RED
TLUG164 ; GREEN
TLUR164 ; RED
TLUY164 ; YELLOW

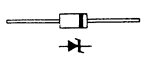

HZ ? ?A ?
HZS ? ?L
RD ? ?EB ?
RD ? ?ESB ?

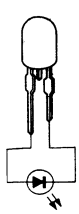

TLY256 ; YELLOW

SECTION E
REPLACEABLE PARTS

E-I . PARTS ORDERING INFORMATION

Standardization of Parts
Repair parts supplied from Sony Parts Center may not be always identical with the part which actually in use due to "accommodating the improved parts and/or engineering changes" or "standardization of genuine parts".
This manual's exploded views and electrical parts list are indicating the parts numbers of the "standardized genuine parts at present".

Parts marked with S in the column of SP
These parts are normally stocked as replaceable parts.

Parts marked with O in the column of SP
Orders for these parts will be processed, but allow for additional delivery time.

Parts without Part No.
These parts are not stocked because they are seldom required for routine service.

> The components marked with ⚠ are critical to safe operation.
> These components must be replaces with the same ones as described on the Parts List.

E-2. EXPLODED VIEWS AND PARTS

Index No.	Parts No.	SP	Description
1	X-3167-094-1	O	LID, UPPER ASSY
2	X-3167-096-1	O	PLATE(L), SIDE ASSY
3	X-3167-095-1	O	PLATE(R), SIDE ASSY
4	3-642-656-01	S	FOOT
5	7-682-560-04	S	SCREW +B 4X6
6	7-682-566-04	S	SCREW +B 4X20
7	7-682-562-04	S	SCREW +B 4X10

ORNAMENTAL CASE

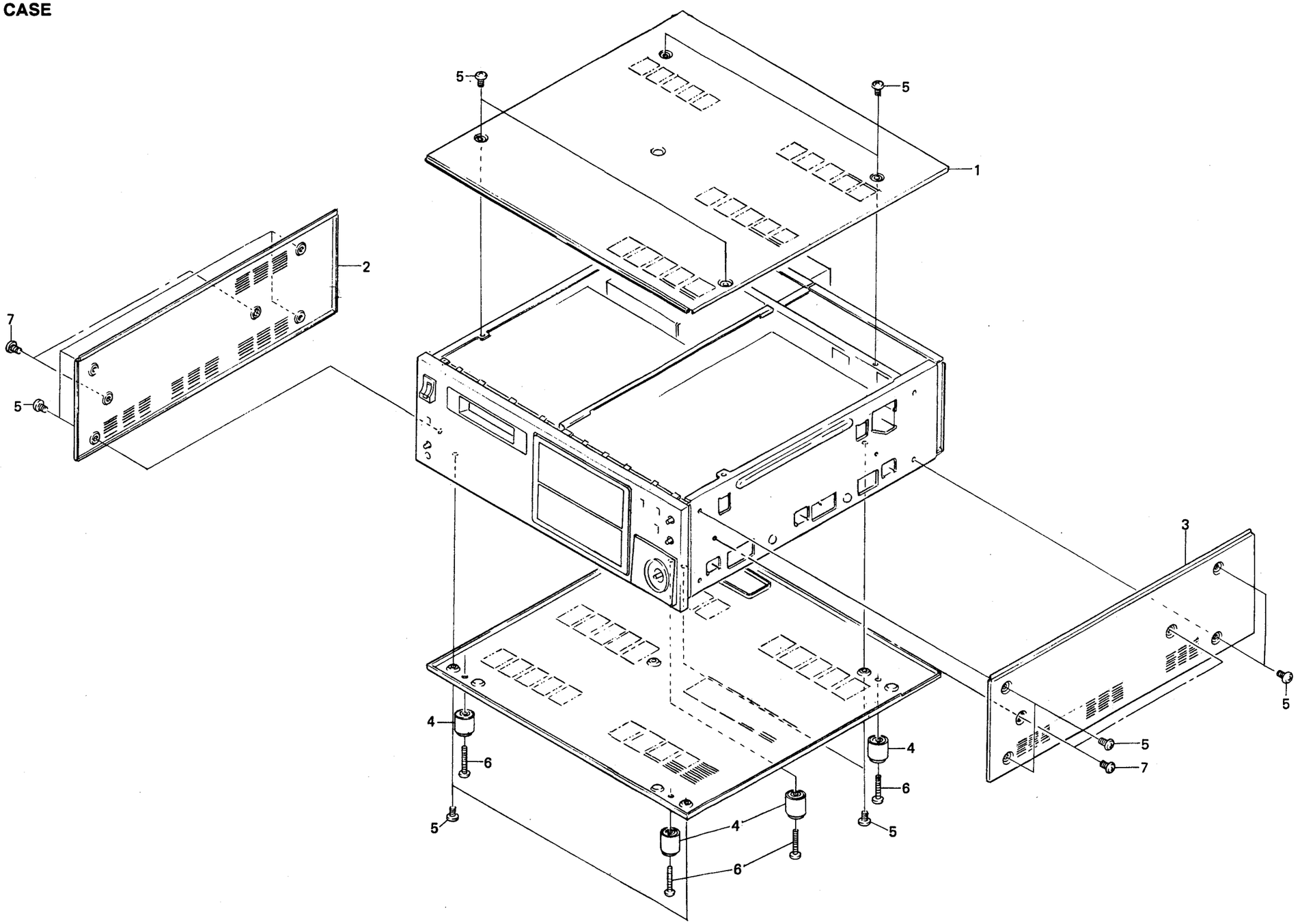

FRONT PANEL ASSY

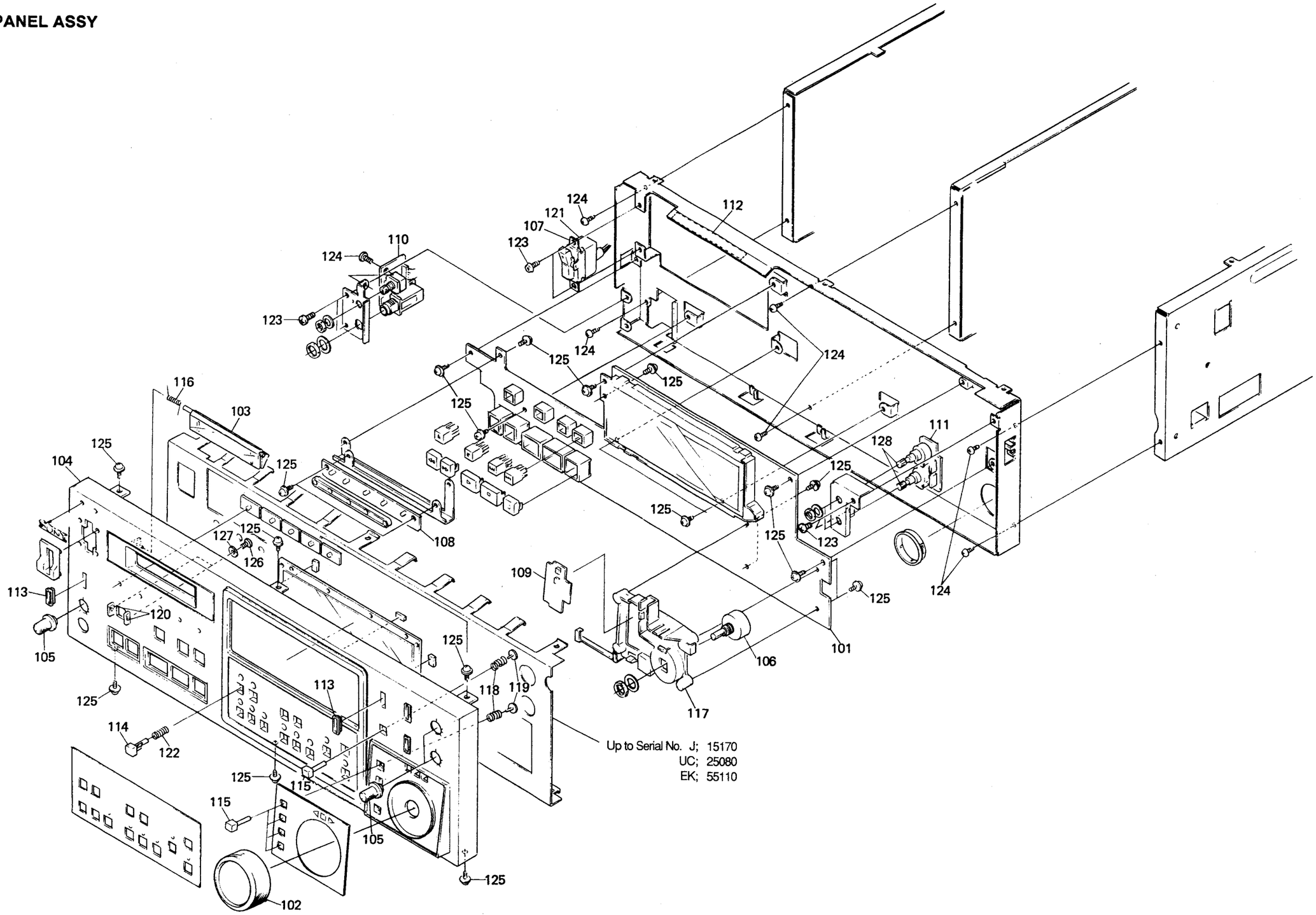

Index No.	Parts No.	SP	Description
101	A-7850-797-A	o	COMPLETE PCB, KY-192
102	X-3165-315-3	s	DIAL ASSY
103	X-3165-508-1	o	DOOR ASSY, CASSETTE
104	X-3165-509-5	o	PANEL ASSY, FRONT
105	X-3717-237-1	s	KNOB ASSY, VOL
106	1-466-469-11	s	ROTARY ENCORDER (MAGNETIC)
107	1-570-117-21	s	SWITCH, SEESAW (AC POWER)
108	1-637-269-11	o	PC BOARD, LED-104
109	1-637-270-11	o	PC BOARD, SW-420
110	1-637-283-14	o	PC BOARD, HP-48
111	1-637-284-13	o	PC BOARD, VR-109
112	3-166-920-01	o	MIRROR (CHASSIS)
113	3-166-928-02	o	ESCUTCHEON, SW
114	3-166-929-01	o	KEY TOP (LARGE)
115	3-166-930-01	o	KEY TOP (SMALL)
116	3-167-801-01	o	SPRING, TENSION
117	3-167-806-02	o	TABLE, ENCORDER
118	3-567-099-00	o	SPRING, COMPRESSION
119	3-668-009-02	s	PIN, PUSH BUTTON
120	3-717-380-11	o	GUARD, REC
121	4-378-341-01	o	COVER, SWITCH
122	4-862-354-00	s	SPRING, COMPRESSION
123	7-682-546-09	s	SCREW +B 3x5
	(Up to Serial No. J;15150, UC;25080, EK;55110)		
	7-682-903-11	s	SCREW +PWH3x6
	(Serial No. J;15151 and higher, UC;25081 and higher, EK;55111 and higher)		
124	7-682-547-04	s	SCREW +B 3x6
125	7-682-903-11	s	SCREW +PWH 3x6
126	7-685-105-19	s	TPG +P 2x8
127	7-688-001-01	s	W2, MIDDLE
128	**1-241-332-11**	s	**RES, VAR, CARBON 20K**

Index No.	Parts No.	SP	Description
201	A-7806-080-C	s	DATM-06R ASSY
202	A-7810-551-D	s	CASSETE COMPARTMENT ASSY
203	A-7850-783-A	o	COMPLETE PCB, DR-139
204	A-7850-813-A	o	COMPLETE PCB, SV-123
205	A-7850-815-A	o	COMPLETE PCB, PS-211
206	A-7850-817-A	o	COMPLETE PCB, DC-47
⚠207	1-450-293-11	s	TRANSFORMER, POWER
208	1-637-285-12	o	PC BOARD, LE-90A
209	1-637-286-12	o	PC BOARD, LE-90B
210	3-570-118-00	s	CUSHION, MOTOR
211	4-818-403-00	s	RIVET, NYLON
212	7-682-546-09	s	SCREW +B 3x5
213	7-682-547-04	s	SCREW +B 3x6
214	7-682-560-04	s	SCREW +B 4x6
215	7-682-903-11	s	SCREW +PWH 3x6
216	8-719-820-27	s	DIODE TLY256

[DABK-7030]

217	A-7850-764-A	o	COMPLETE PCB, TC-58 (For J,UC)
	A-7850-765-A	o	COMPLETE PCB, TC-58P (For EK)
218	7-682-903-11	s	SCREW, +PWH 3x6

注 意; (201)は、E-19ページの(606)、(619)、(620)、(624)を含んでいません。

NOTE; (201) does not include (606), (619), (620) and (624) on page E-19.

MAIN ASSY(1)

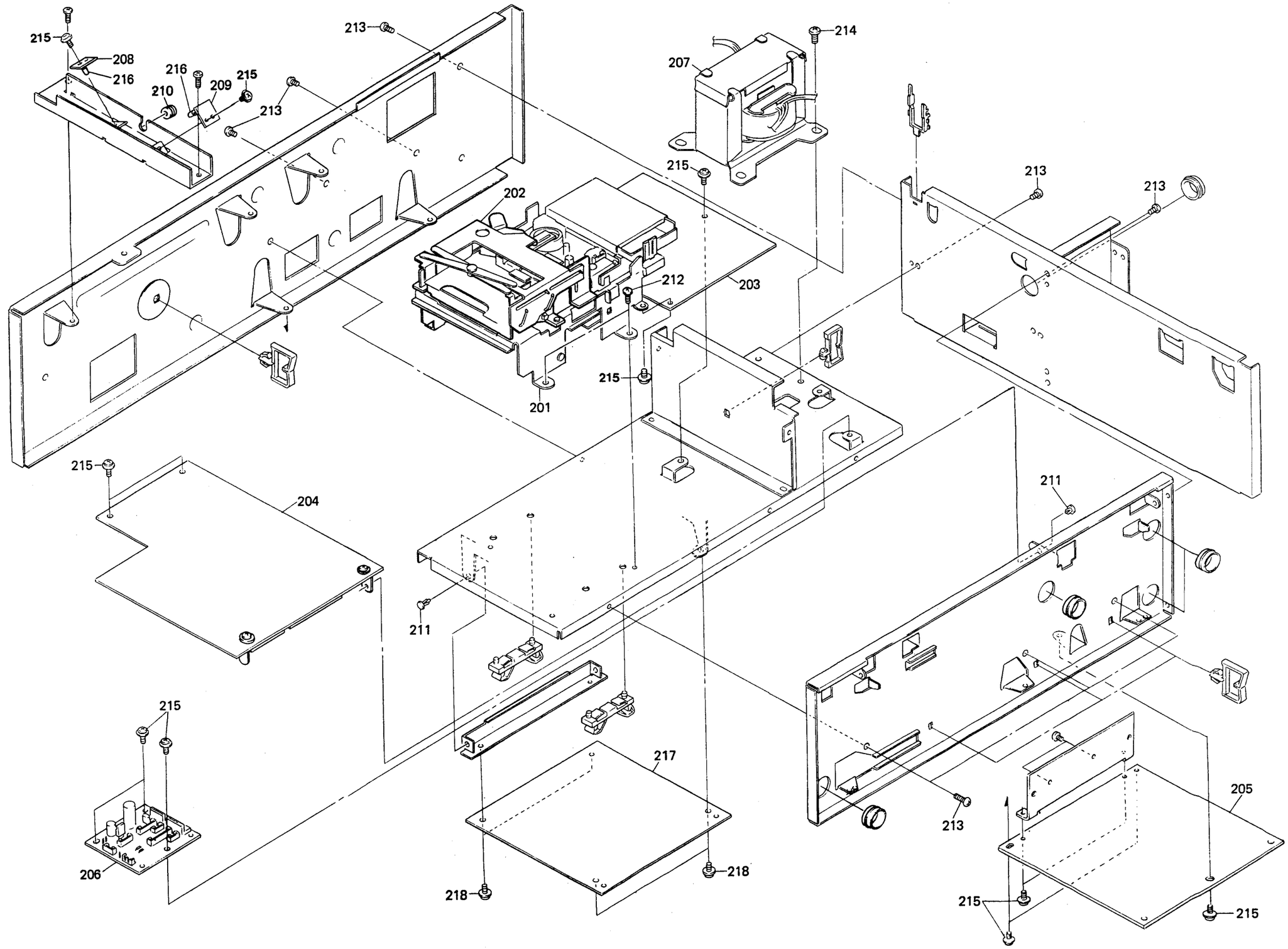
215
208
216
216
210
209
215
213
213
213
214
207
215
202
212
203
213
213
215
201
215
204
211
211
215
206
217
218
218
213
205
215
215

MAIN ASSY(2)

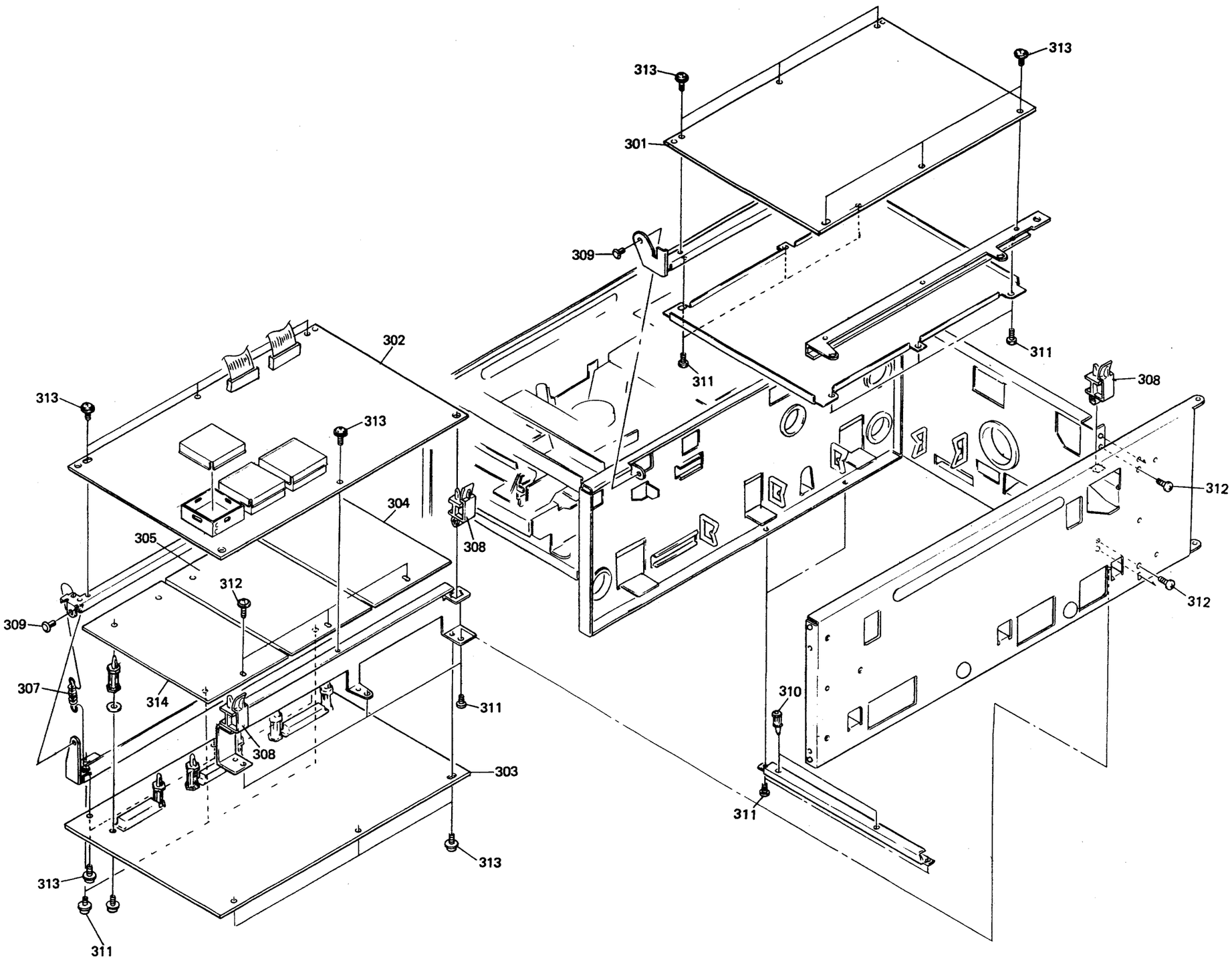
313
313
301
309
311
311
308
312
312
310
311
302
313
313
304
305
308
312
309
307
314
311
308
303
313
313
311

Index No.	Parts No.	SP	Description
301	A-7850-803-B	s	COMPLETE PCB, ADA-18
302	A-7850-805-A	s	COMPLETE PCB, SP-13
303	A-7850-807-A	s	COMPLETE PCB, SY-155A
304	A-7850-809-A	s	COMPLETE PCB, DIO-10
305	A-7850-811-A	s	COMPLETE PCB, MEM-40A
306	1-590-307-11	s	WIRE, FLEXIBLE CARD (20P)
307	3-437-289-11	s	SPRING, TENSION
308	3-703-141-00	o	HOLDER, PCB
309	4-818-403-00	s	RIVET, NYLON
310	4-861-614-11	s	HOLDER, PC BOARD
311	7-682-546-09	s	SCREW +B 3x5
312	7-682-547-04	s	SCREW +B 3x6
313	7-682-903-11	s	SCREW +PWH 3x6
[DABK-7055]			
314	A-7850-760-A	o	COMPLETE PCB, MEM-40C

REAR PANEL ASSY

Index No.	Parts No.	SP	Description
401	A-7850-820-A	o	COMPLETE PCB, RM-77
402	X-2068-004-0	s	TERMINAL ASSY
403	1-413-612-11	s	SWITCHING REGULATOR
⚠ 404	1-532-825-11	s	FUSE, GLASS TUBE (For J, UC)
	1-532-285-00	s	FUSE, TIME-LAG (For EK)
405	1-561-781-11	s	CONNECTOR, BNC (RECEPTACLE)
406	1-637-275-11	o	PC BOARD, AC-104
407	1-637-276-13	o	PC BOARD, CP-171
408	1-637-277-11	o	PC BOARD, CP-157A
409	1-637-279-11	o	PC BOARD, SW-426
410	1-637-280-11	o	PC BOARD, CP-172A
411	1-637-281-11	o	PC BOARD, CP-172B
412	1-637-282-12	o	PC BOARD, CP-158
413	1-637-291-12	o	PC BOARD, CP-173A
414	1-637-292-12	o	PC BOARD, CP-173B
415	1-637-293-12	o	PC BOARD, SW-453
416	1-637-294-12	o	PC BOARD, SW-454
⚠ 417	1-946-795-13	s	HARNESS, SUB (AC IN)
⚠ 418	1-946-796-11	s	HARNESS, SUB (VS)
419	1-946-959-11	o	HARNESS (RM)
420	1-946-960-11	o	HARNESS (9P)
421	1-946-961-12	o	HARNESS (FS)
422	2-068-008-00	s	WASHER
423	3-166-944-01	o	PLATE, BLIND
424	3-166-945-01	o	PLATE (25P), BLIND, D-SUB
425	3-166-948-01	o	PANEL, DIO
426	3-166-954-02	o	PANEL, CONNECTOR
427	3-166-956-03	o	PANEL, REAR (For J, UC)
	3-166-956-12	o	PANEL, REAR (For EK)
428	3-673-910-00	o	SCREW, CONNECTOR
429	4-601-472-00	o	COVER, FUSE
430	4-818-403-00	s	RIVET, NYLON
431	7-621-775-10	s	SCREW +B 2.6x4
432	7-623-422-07	s	LW 3, TYPE B
433	7-682-546-09	s	SCREW +B 3x5
434	7-682-547-04	s	SCREW +B 3x6
435	7-682-903-11	s	SCREW +PWH 3x6
436	7-682-248-09	s	SCREW +K 3x8
[DABK-7030]			
437	1-561-781-11	s	CONNECTOR, BNC
438	1-637-295-11	o	PC BOARD, CP-159A
439	1-637-296-11	o	PC BOARD, CP-159B
440	1-637-297-11	o	PC BOARD, CP-152
441	1-637-298-11	o	PC BOARD, SW-455
442	3-166-878-01	o	PANEL, TC
443	7-621-775-10	s	SCREW +B 2.6x4

REAR PANEL ASSY

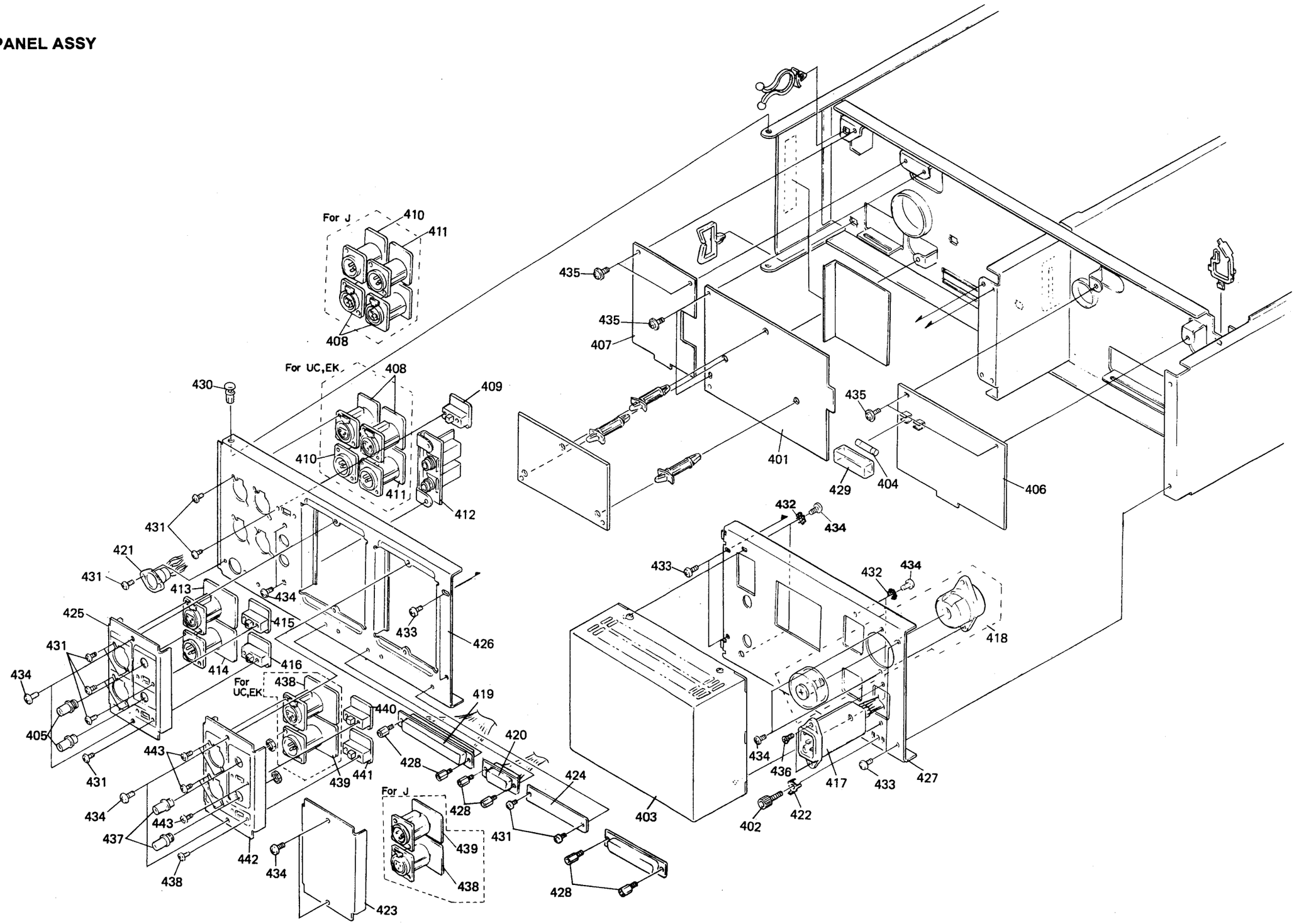

CASSETTE COMPARTMENT

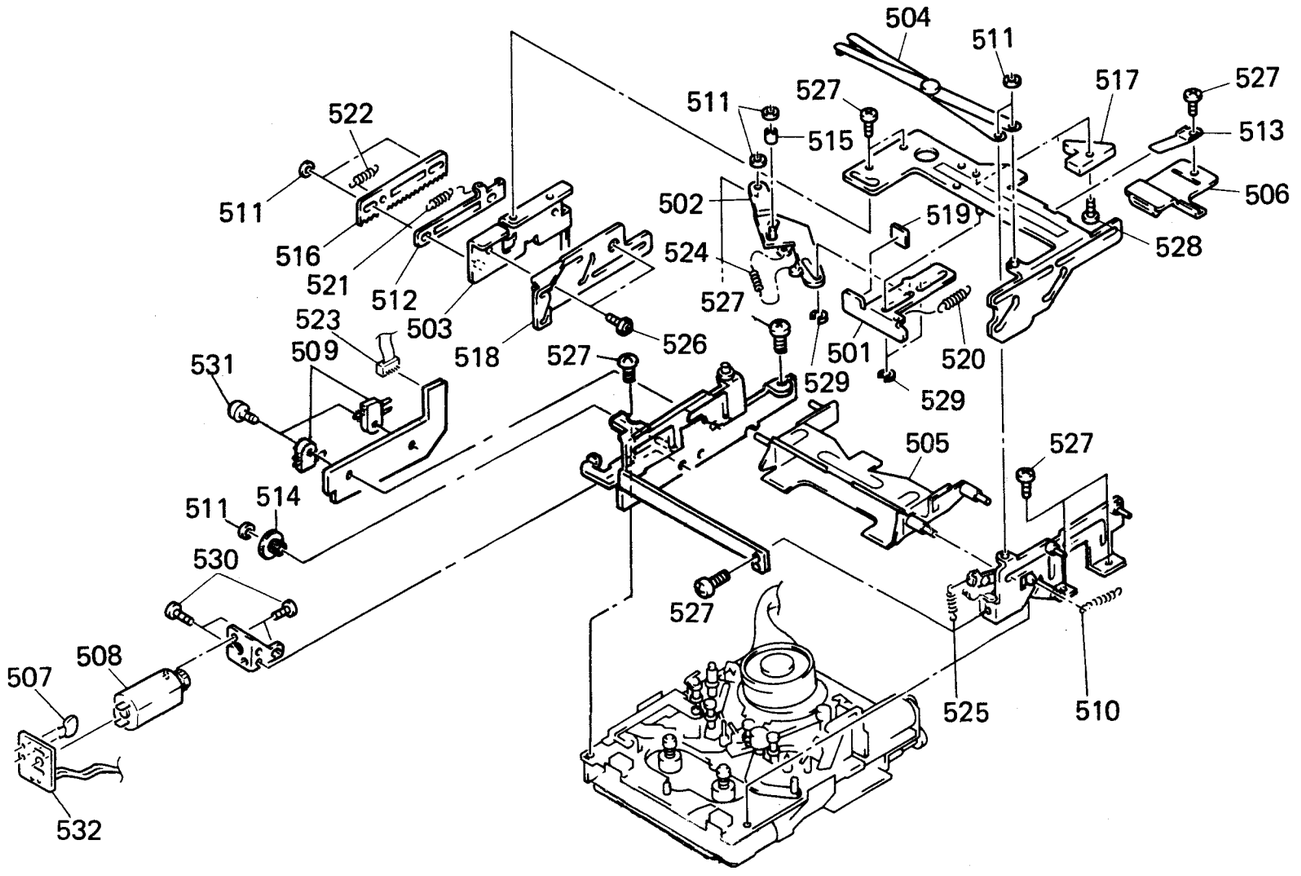

Index No.	Parts No.	SP	Description
501	X-3346-903-1	o	SLIDER (EJ) ASSY
502	X-3346-904-1	o	LEVER (EJ) ASSY
503	X-3346-905-1	o	BRACKET (RODER) ASSY
504	X-3346-906-1	o	LEVER (X) ASSY
505	X-3346-913-1	o	HOLDER ASSY, CASSETTE
506	X-3346-916-2	o	LEVER (LOCK) ASSY
507	1-161-055-00	s	CAP, CERAMIC 0.022 20% 25V
508	X-3165-836-1	s	MOTOR ASSY
509	1-570-771-11	s	SWITCH
510	3-305-523-00	s	SPRING, TENSION
511	3-321-813-01	s	WASHER, COTTER POLYETHYLENE
512	3-346-912-01	o	LIMITER (RACK)
513	3-346-915-01	s	SPRING (LOCK)
514	3-346-918-11	s	WHEEL, WORM
515	3-346-936-01	s	ROLLER
516	3-346-949-01	s	RACK
517	3-346-950-01	o	PLATE, CAM
518	3-346-955-01	s	RODER (SUB)
519	3-346-962-01	o	CUSHION (EJ)
520	3-346-963-01	s	SPRING, TENSION
521	3-346-964-01	s	SPRING, TENSION
522	3-346-965-01	s	SPRING, TENSION
523	1-946-957-11	o	HARNESS (CCP)
524	3-570-892-00	s	SPRING, TENSION
525	4-877-850-00	s	SPRING, TENSION
526	7-621-255-15	s	SCREW +P 2x3
527	7-621-772-08	s	SCREW +B 2x3
528	7-621-772-20	s	SCREW +B 2x5
529	7-624-102-04	s	STOP RING 1.5, TYPE-E
530	7-627-554-07	s	SCREW, PRECISION +P 2x2.2
531	7-627-554-27	s	SCREW, PRECISION +P 2x6
532	1-640-230-11	s	PC BOARD, MTR

注 意; この頁の部品は、A-7806-080-Cの構成部品です。

NOTE; The parts on this page are component parts of A-7806-080-C.

MECHANISM DECK(1)

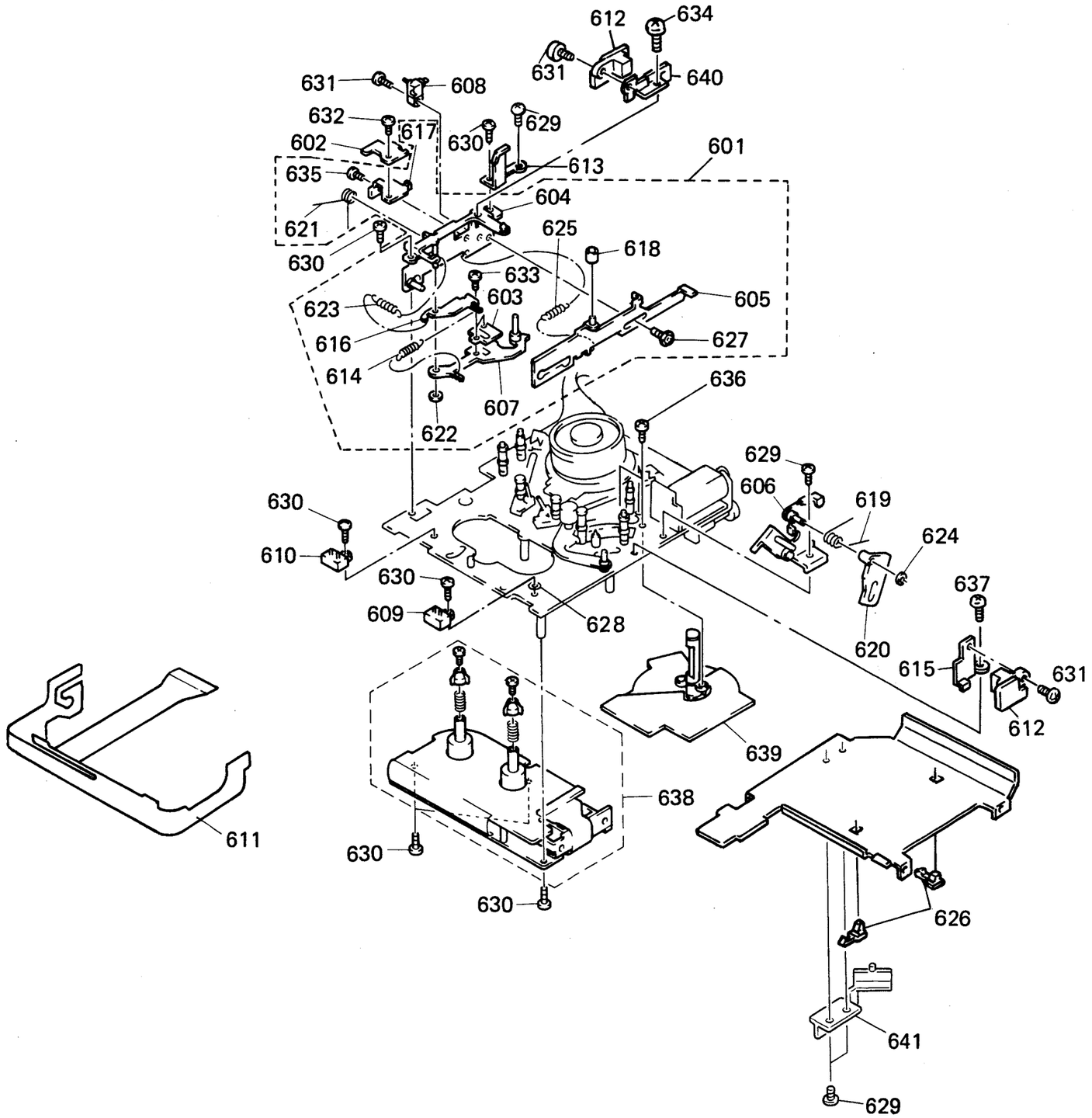

Index No.	Parts No.	SP	Description
601	A-7810-486-A	s	TENSION REGULATOR ASSY
602	A-7850-780-A	o	MOUNTED PCB, TENSION REGULATOR
603	X-3337-611-1	s	HOLDER ASSY, MAGNET
604	X-3337-619-1	o	CHASSIS ASSY, TENSION REGULATOR
605	X-3337-627-1	s	SLIDER ASSY, MODE
606	X-3362-707-1	o	OPENER (R) ASSY, LID
607	X-3362-045-1	s	LEVER(TENSION REGULATOR) ASSY
608	1-570-771-11	s	SWITCH
609	1-570-883-11	s	SWITCH, PUSH (2 KEY)
610	1-570-883-21	s	SWITCH, PUSH (2 KEY)
611	1-637-288-11	s	PC BOARD, HN-151 FLEXIBLE
612	1-807-698-11	s	PHOTO SENSOR
613	3-167-379-01	o	OPENER(L), LID
614	3-307-377-00	s	SPRING, TENSION
615	3-337-610-01	o	BRACKET(RIGHT), E DETECTION
616	3-337-657-01	o	LEVER, LIMITER
617	3-337-662-01	o	BRACKET, HOLE ELEMENT
618	3-337-664-01	s	ROLLER
619	3-346-911-01	s	SPRING (LO)
620	3-346-954-01	s	LEVER (LO DRIVING)
621	3-352-502-01	s	SPRING
622	3-559-408-11	s	WASHER, POLYETHYLENE, DIA.1.2
623	3-561-626-00	s	SPRING, TENSION
624	3-570-615-00	s	POLY-WASHER
625	3-570-892-00	s	SPRING, TENSION
626	3-671-150-01	o	CLAMP
627	3-703-502-11	s	SCREW
628	4-918-886-01	s	WASHER, THRUST
629	7-621-772-08	s	SCREW +B 2x3
630	7-621-772-18	s	SCREW +B 2x4
631	7-621-772-20	s	SCREW +B 2x5
632	7-627-551-17	s	SCREW, PRECISION +P 1.4x2
633	7-627-551-87	s	SCREW, PRECISION +P 1.4x1.8
634	7-627-552-18	s	SCREW, PRECISION +B 1.7x1.6
635	7-627-552-27	s	SCREW, PRECISION +B 1.7x2
636	7-627-552-47	s	SCREW, PRECISION +P 1.7x4
637	7-627-854-07	s	SCREW, PRECISION +P 2x2.5
638	8-835-205-01	s	MOTOR, DC U-2A
639	8-835-206-01	s	MOTOR, DC BHF-2803A
640	3-166-932-01	o	BRACKET(L), E DETECTION
641	3-171-908-01	o	GUARD, FLEXIBLE

注 意; (606)、(619)、(620)、(624)を除くすべての部品は、
A-7806-080-Cの構成部品です。

NOTE; Except for (606), (619), (620) and (624) all the parts
are component parts of A-7806-080-C.

MECHANISM DECK(2)

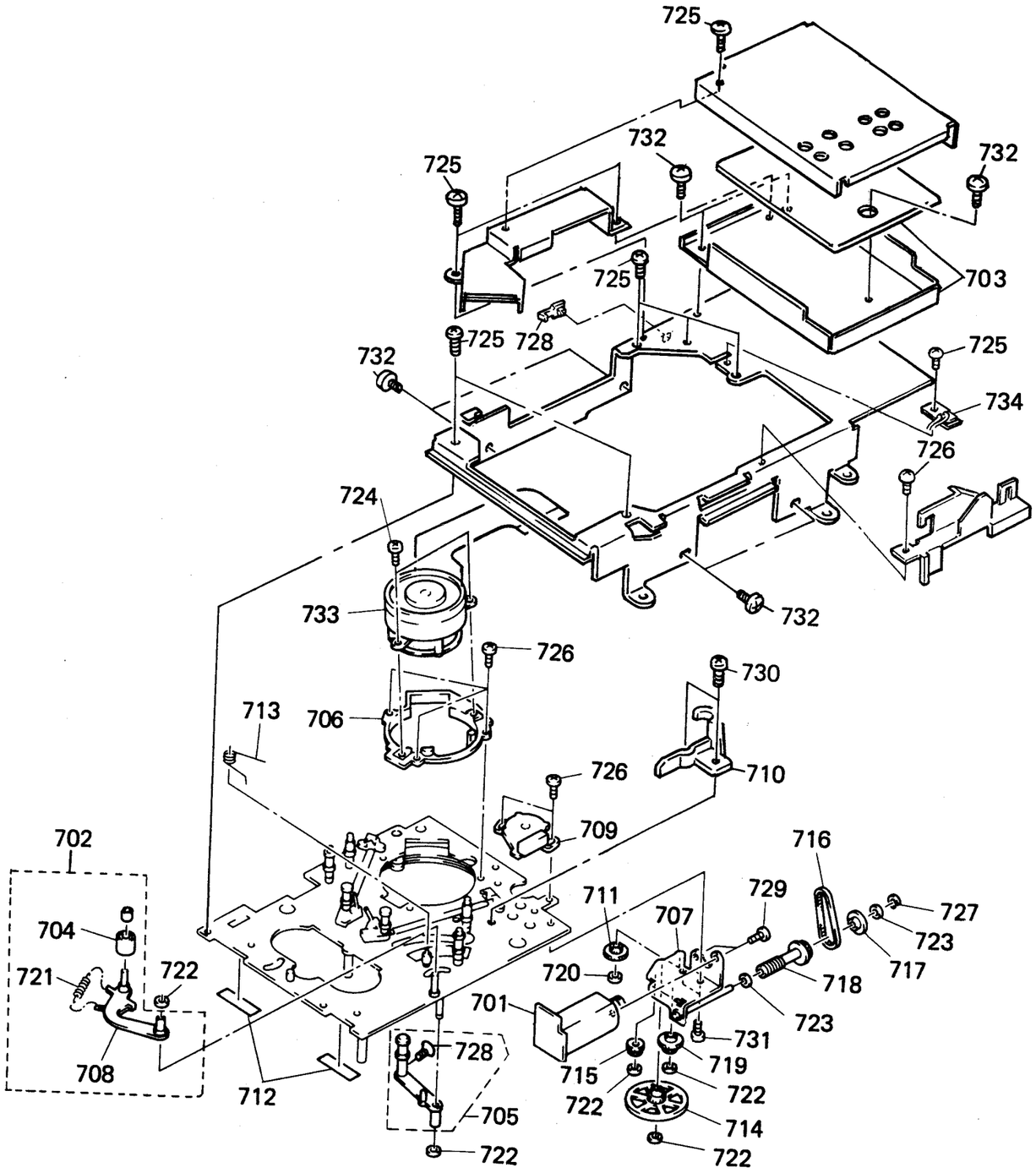

Index No.	Parts No.	SP	Description
701	X-3337-648-1	s	MOTOR ASSY, CONTOROL
702	A-7810-488-A	s	PINCH ROLLER BLOCK ASSY
703	A-7810-495-A	o	RF-31 ASSY
704	X-3337-610-1	s	PINCH ROLLER ASSY
705	A-7810-553-B	s	ARM ASSY, F
706	X-3337-614-1	o	SLANT ASSY
707	X-3337-617-1	o	BRACKET ASSY, CONTROL MOTOR
708	X-3337-660-1	s	ARM (PINCH ROLLER) ASSY
709	1-464-724-11	s	ENCODER, ROTARY
710	3-168-976-01	s	GUARD, TAPE
711	3-337-669-01	s	GEAR, MIDWAY
712	3-337-696-01	o	SHEET, INSULATING
713	3-345-046-01	o	SPRING
714	3-345-181-01	s	GEAR (LOADING A)
715	3-345-182-01	s	GEAR (LOADING B)
716	3-346-908-01	s	BELT
717	3-346-909-01	s	COLLAR (WORM)
718	3-346-910-01	s	PULLEY (WORM)
719	3-352-501-01	s	WHEEL, WORM
720	3-559-408-11	s	WASHER, POLYETHYLENE, DIA.1.2
721	3-547-659-00	s	SPRING, TENSION
722	3-701-436-11	s	WASHER, 1.6 POLYETHYLENE
723	3-701-437-21	s	WASHER
724	7-621-255-25	s	SCREW +P 2x4
725	7-621-772-08	s	SCREW +B 2x3
726	7-621-772-18	s	SCREW +B 2x4
727	7-624-102-04	s	STOP RING 1.5, TYPE -E
728	3-671-150-11	o	CLAMP
729	7-627-553-17	s	SCREW, PRECISION +P 2x2
730	7-627-852-18	s	SCREW, PRECISION +P 1.7x4
731	7-628-253-00	s	SCREW +PS 2x4
732	7-682-547-04	s	SCREW +B 3x6
733	8-848-548-11	s	DRUM ASSY DOH-14A-R
734	1-808-281-52	s	SENSOR

注 意; この頁の部品は、A-7806-080-Cの構成部品です。

NOTE; The parts on this page are component parts of A-7806-080-C.

MECHANISM DECK(3)

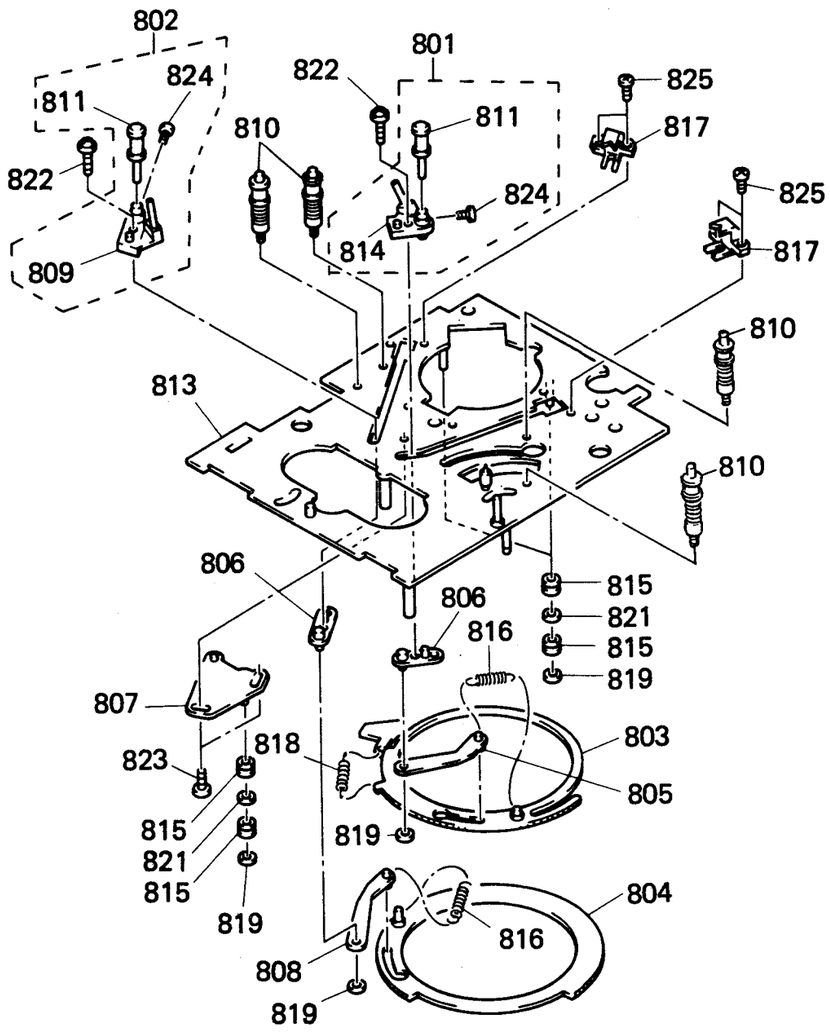

Index No.	Parts No.	SP	Description
801	A-7810-492-C	s	GUIDE (R) ASSY
802	A-7810-493-C	s	GUIDE (L) ASSY
803	X-3337-601-1	s	RING (RIGHT) ASSY, LOADING
804	X-3337-602-1	s	RING (LEFT) ASSY, LOADING
805	X-3337-603-1	s	ARM (RIGHT) ASSY, LOADING
806	X-3337-604-1	s	PLATE ASSY, LOADING
807	X-3337-605-1	o	ARM ASSY, RING ROLLER
808	X-3337-607-1	o	ARM (LEFT) ASSY, LOADING
809	X-3337-615-1	s	SLANT BLOCK (LEFT) ASSY
810	A-7810-552-B	s	AP R.G ASSY
811	X-3362-671-1	s	GUIDE ASSY, ROLLER
813	X-3337-625-1	o	CHASSIS ASSY, MECHANICAL
814	X-3337-647-1	s	SLANT BLOCK (RIGHT) ASSY
815	3-337-622-01	s	ROLLER, RING
816	3-337-653-01	s	SPRING, TENSION
817	3-337-685-01	o	CATCHER
818	3-547-659-00	s	SPRING, TENSION
819	3-559-408-11	s	WASHER, POLYETHYLENE, DIA.1.2
821	3-701-436-11	s	WASHER, 1.6 POLYETHYLENE
822	3-703-502-81	s	SCREW
823	7-621-772-08	s	SCREW +B 2x3
824	7-627-551-17	s	SCREW, PRECISION +P 1.4x2
825	7-627-552-47	s	SCREW, PRECISION +P 1.7x4

注 意; この頁の部品は、A-7806-080-Cの構成部品です。

NOTE; The parts on this page are component parts of A-7806-080-C.

E-3. ELECTRICAL PARTS LIST

STANDARDIZED PARTS LIST

Replacements for capacitors and resistors not given in each board parts lists are shown below.
If a capacitor with the desired working voltage is not found, choose one of higher working voltage.

CAPACITOR, CHIP CERAMIC

Part No.	SP	Description			
1-163-093-00	s	CAP, CHIP CERAMIC	10pF	5%	50V
1-163-101-00	s	CAP, CHIP CERAMIC	22pF	5%	50V
1-163-105-00	s	CAP, CHIP CERAMIC	33pF	5%	50V
1-163-109-00	s	CAP, CHIP CERAMIC	47pF	5%	50V
1-163-117-00	s	CAP, CHIP CERAMIC	100pF	5%	50V
1-163-133-00	s	CAP, CHIP CERAMIC	470pF	5%	50V
1-163-141-00	s	CAP, CHIP CERAMIC	1000pF	5%	50V
1-163-019-00	s	CAP, CHIP CERAMIC	6800pF	10%	50V
1-162-970-11	s	CAP, CHIP CERAMIC	0.01	10%	20V
1-163-038-00	s	CAP, CHIP CERAMIC	0.1		50V

CAPACITOR, ELECTROLYTIC

Part No.	SP	Description			
1-123-382-00	ś	CAP, ELECT	3.3	20%	100V
1-126-059-11	s	CAP, ELECT	10	20%	63V
1-124-229-00	s	CAP, ELECT	33	20%	10V
1-124-910-11	s	CAP, ELECT	47	20%	50V
1-124-584-00	s	CAP, ELECT	100	20%	10V
1-126-101-11	s	CAP, ELECT	100	20%	16V
1-124-122-11	s	CAP, ELECT	100	20%	50V
1-126-335-11	s	CAP, ELECT	220	20%	10V
1-124-120-11	s	CAP, ELECT	220	20%	25V

RESISTOR, CHIP

Part No.	SP	Description			
1-216-295-00	s	RES, CHIP	0	5%	1/10W
1-216-001-00	s	RES, CHIP	10	5%	1/10W
1-216-009-00	s	RES, CHIP	22	5%	1/10W
1-216-017-00	s	RES, CHIP	47	5%	1/10W
1-216-021-00	s	RES, CHIP	68	5%	1/10W
1-216-025-00	s	RES, CHIP	100	5%	1/10W
1-216-029-00	s	RES, CHIP	150	5%	1/10W
1-216-031-00	s	RES, CHIP	180	5%	1/10W
1-216-033-00	s	RES, CHIP	220	5%	1/10W
1-216-037-00	s	RES, CHIP	330	5%	1/10W
1-216-041-00	s	RES, CHIP	470	5%	1/10W
1-216-045-00	s	RES, CHIP	680	5%	1/10W
1-216-049-00	s	RES, CHIP	1k	5%	1/10W
1-216-051-00	s	RES, CHIP	1.2k	5%	1/10W
1-216-055-00	s	RES, CHIP	1.8k	5%	1/10W
1-216-057-00	s	RES, CHIP	2.2k	5%	1/10W
1-216-059-00	s	RES, CHIP	2.7k	5%	1/10W
1-216-061-00	s	RES, CHIP	3.3k	5%	1/10W
1-216-063-00	s	RES, CHIP	3.9k	5%	1/10W
1-216-065-00	s	RES, CHIP	4.7k	5%	1/10W
1-216-069-00	s	RES, CHIP	6.8k	5%	1/10W
1-216-073-00	s	RES, CHIP	10k	5%	1/10W
1-216-077-00	s	RES, CHIP	15k	5%	1/10W
1-216-081-00	s	RES, CHIP	22k	5%	1/10W
1-216-083-00	s	RES, CHIP	27k	5%	1/10W
1-216-085-00	s	RES, CHIP	33k	5%	1/10W
1-216-089-00	s	RES, CHIP	47k	5%	1/10W
1-216-097-00	s	RES, CHIP	100k	5%	1/10W
1-216-099-00	s	RES, CHIP	120k	5%	1/10W
1-216-101-00	s	RES, CHIP	150k	5%	1/10W
1-216-109-00	s	RES, CHIP	330k	5%	1/10W
1-216-121-00	s	RES, CHIP	1.0M	5%	1/10W
1-216-133-00	s	RES, CHIP	3.3M	5%	1/10W

AC-104 BOARD

Ref. No. or Q'ty	Part No.	SP	Description
2pcs	1-533-189-11	o	HOLDER, FUSE
1pc	1-637-275-11	o	PC BOARD, AC-104
CN1	⚠ 1-564-104-11	o	PIN CONNECTOR 3P
CN2	⚠ 1-564-241-00	o	CONNECTOR, 4P, MALE
CN3	⚠ 1-564-242-00	o	PIN, CONNECTOR 5P
CN4	⚠ 1-564-915-11	o	PIN, CONNECTOR 7P
CN5	⚠ 1-564-905-11	o	PIN, CONNECTOR 9P
CN6	⚠ 1-564-243-00	o	PIN, CONNECTOR 6P

ADA-18 BOARD

Ref. No. or Q'ty	Part No.	SP	Description
1pc	A-7850-803-B	o	COMPLETE PCB, ADA-18
(This assembly includes the following parts.)			
C1	1-164-096-11	s	CERAMIC 0.01uF 50V
C2	1-164-096-11	s	CERAMIC 0.01uF 50V
C3	1-164-096-11	s	CERAMIC 0.01uF 50V
C4	1-164-096-11	s	CERAMIC 0.01uF 50V
C7	1-164-096-11	s	CERAMIC 0.01uF 50V
C12	1-164-096-11	s	CERAMIC 0.01uF 50V
C13	1-164-096-11	s	CERAMIC 0.01uF 50V
C14	1-164-096-11	s	CERAMIC 0.01uF 50V
C15	1-164-096-11	s	CERAMIC 0.01uF 50V
C16	1-164-096-11	s	CERAMIC 0.01uF 50V
C17	1-164-096-11	s	CERAMIC 0.01uF 50V
C18	1-164-096-11	s	CERAMIC 0.01uF 50V
C19	1-126-335-11	s	ELECT 220uF 20% 10VW
C20	1-126-335-11	s	ELECT 220uF 20% 10VW
C21	1-164-096-11	s	CERAMIC 0.01uF 50V
C22	1-164-096-11	s	CERAMIC 0.01uF 50V
C23	1-126-096-11	s	ELECT 10uF 20% 35V
C24	1-126-059-11	s	ELECT 10uF 20% 50VW
C25	1-162-896-11	s	CERAMIC 0.01uF 10% 50V
C26	1-126-059-11	s	ELECT 10uF 20% 50VW
C27	1-162-896-11	s	CERAMIC 0.01uF 10% 50V
C28	1-124-261-00	s	ELECT 10uF 20% 50V
C29	1-164-096-11	s	CERAMIC 0.01uF 50V
C30	1-164-096-11	s	CERAMIC 0.01uF 50V
C31	1-126-059-11	s	ELECT 10uF 20% 50VW
C32	1-162-896-11	s	CERAMIC 0.01uF 10% 50V
C33	1-164-096-11	s	CERAMIC 0.01uF 50V
C35	1-164-096-11	s	CERAMIC 0.01uF 50V
C37	1-164-096-11	s	CERAMIC 0.01uF 50V
C38	1-164-096-11	s	CERAMIC 0.01uF 50V
C39	1-164-096-11	s	CERAMIC 0.01uF 50V
C40	1-164-096-11	s	CERAMIC 0.01uF 50V
C41	1-164-096-11	s	CERAMIC 0.01uF 50V
C101	1-124-657-00	s	ELECT, NONPOLAR 10uF 20% 50V
C102	1-124-657-00	s	ELECT, NONPOLAR 10uF 20% 50V
C103	1-124-657-00	s	ELECT, NONPOLAR 10uF 20% 50V
C105	1-164-096-11	s	CERAMIC 0.01uF 50V
C107	1-164-096-11	s	CERAMIC 0.01uF 50V
C108	1-130-856-00	s	FILM 0.0068uF 3% 100W
C109	1-162-716-11	s	CERAMIC 180PF 1% 50V
C110	1-126-529-11	s	ELECT 0.47uF 20% 50VW
C111	1-164-127-11	s	CERAMIC 510PF 5% 50V
C112	1-164-077-11	s	CERAMIC 220PF 10% 50V
C113	1-164-096-11	s	CERAMIC 0.01uF 50V
C114	1-164-096-11	s	CERAMIC 0.01uF 50V
C115	1-124-499-11	s	ELECT, NONPOLAR 1uF 20% 50V
C116	1-124-499-11	s	ELECT NONPOLAR 1uF 20% 50V
C117	1-164-073-11	s	CERAMIC 100PF 10% 50V
C118	1-124-282-00	s	ELECT NONPOLAR 22uF 20% 25V
C120	1-164-096-11	s	CERAMIC 0.01uF 50V
C121	1-164-096-11	s	CERAMIC 0.01uF 50V
C201	1-124-657-00	s	ELECT, NONPOLAR 10uF 20% 50V
C202	1-124-657-00	s	ELECT, NONPOLAR 10uF 20% 50V
C203	1-124-657-00	s	ELECT, NONPOLAR 10uF 20% 50V
C205	1-164-096-11	s	CERAMIC 0.01uF 50V

NOTE: Please see page E-27 for the parts that are not listed in the parts list.

(ADA-18 BOARD)

Ref. No. or Q'ty	Part No.	SP	Description
C207	1-164-096-11	s	CERAMIC 0.01uF 50V
C208	1-130-856-00	s	FILM 0.0068uF 3% 100W
C209	1-162-716-11	s	CERAMIC 180PF 1% 50V
C210	1-126-529-11	s	ELECT 0.47uF 20% 50VW
C211	1-164-127-11	s	CERAMIC 510PF 5% 50V
C212	1-164-077-11	s	CERAMIC 220PF 10% 50V
C213	1-164-096-11	s	CERAMIC 0.01uF 50V
C214	1-164-096-11	s	CERAMIC 0.01uF 50V
C215	1-124-499-11	s	ELECT, NONPOLAR 1uF 20% 50V
C216	1-124-499-11	s	ELECT, NONPOLAR 1uF 20% 50V
C217	1-164-073-11	s	CERAMIC 100PF 10% 50V
C218	1-124-282-00	s	ELECT NONPOLAR 22uF 20% 25V
C220	1-164-096-11	s	CERAMIC 0.01uF 50V
C221	1-164-096-11	s	CERAMIC 0.01uF 50V
C301	1-164-081-11	s	CERAMIC 470PF 10% 50VW
C302	1-126-162-11	s	ELECT 3.3uF 20% 50V
C303	1-126-162-11	s	ELECT 3.3uF 20% 50V
C306	1-136-230-00	s	FILM 0.0022uF 5% 100W
C307	1-136-230-00	s	FILM 0.0022uF 5% 100W
C308	1-106-351-00	s	MYLAR 0.0022 5% 200V
C309	1-164-096-11	s	CERAMIC 0.01uF 50V
C310	1-164-096-11	s	CERAMIC 0.01uF 50V
C311	1-164-073-11	s	CERAMIC 100PF 10% 50V
C312	1-124-657-00	s	ELECT, NONPOLAR 10uF 20% 50V
C313	1-130-856-00	s	MYLAR 0.0068uF 3% 100V
C314	1-162-716-11	s	CERAMIC 180PF 1% 50V
C315	1-126-529-11	s	ELECT 0.47uF 20% 50VW
C316	1-164-073-11	s	CERAMIC 100PF 10% 50V
C317	1-124-657-00	s	ELECT NONPOLAR 10uF 20% 50V
C318	1-164-096-11	s	CERAMIC 0.01uF 50V
C319	1-164-096-11	s	CERAMIC 0.01uF 50V
C320	1-164-096-11	s	CERAMIC 0.01uF 50V
C321	1-164-096-11	s	CERAMIC 0.01uF 50V
C323	1-164-066-11	s	CERAMIC 68PF 5% 50VW
C324	1-164-066-11	s	CERAMIC 68PF 5% 50VW
C327	1-130-471-00	s	MYLAR 0.001uF 5% 50V
C328	1-123-335-00	s	ELECT 330uF 20% 25VW
C329	1-123-335-00	s	ELECT 330uF 20% 25VW
C330	1-164-096-11	s	CERAMIC 0.01uF 50V
C331	1-164-096-11	s	CERAMIC 0.01uF 50V
C334	1-164-096-11	s	CERAMIC 0.01uF 50V
C335	1-124-657-00	s	ELECT 10uF 20% 50V
C336	1-164-075-11	s	CERAMIC 150PF 10% 50VW
C337	1-124-657-00	s	ELECT NONPOLAR 10uF 20% 50V
C338	1-164-096-11	s	CERAHIC 0.01uF 50V
C340	1-164-096-11	s	CERAMIC 0.01uF 50V
C401	1-164-081-11	s	CERAMIC 470PF 10% 50VW
C402	1-126-162-11	s	ELECT 3.3uF 20% 50V
C403	1-126-162-11	s	ELECT 3.3uF 20% 50V
C406	1-136-230-00	s	FILM 0.0022uF 5% 100W
C407	1-136-230-00	s	FILM 0.0022uF 5% 100W
C408	1-106-351-00	s	MYLAR 0.0022 5% 200V
C409	1-164-096-11	s	CERAMIC 0.01uF 50V
C410	1-164-096-11	s	CERAMIC 0.01uF 50V
C411	1-164-073-11	s	CERAMIC 100PF 10% 50V
C412	1-124-657-00	s	ELECT, NONPOLAR 10uF 20% 50V
C413	1-130-856-00	s	FILM 0.0068uF 3% 100W
C414	1-162-716-11	s	CERAMIC 180PF 1% 50V
C415	1-126-529-11	s	ELECT 0.47uF 20% 50VW

(ADA-18 BOARD)

Ref. No. or Q'ty	Part No.	SP	Description
C416	1-164-073-11	s	CERAMIC 100PF 10% 50V
C417	1-124-657-00	s	ELECT NONPOLAR 10uF 20% 50V
C418	1-164-096-11	s	CERAMIC 0.01uF 50V
C419	1-164-096-11	s	CERAMIC 0.01uF 50V
C420	1-164-096-11	s	CERAMIC 0.01uF 50V
C421	1-164-096-11	s	CERAMIC 0.01uF 50V
C423	1-164-066-11	s	CERAMIC 68PF 5% 50VW
C424	1-164-066-11	s	CERAMIC 68PF 5% 50VW
C427	1-130-471-00	s	MYLAR 0.001uF 5% 50V
C428	1-123-335-00	s	ELECT 330uF 20% 25VW
C429	1-123-335-00	s	ELECT 330uF 20% 25VW
C430	1-164-096-11	s	CERAMIC 0.01uF 50V
C431	1-164-096-11	s	CERAMIC 0.01uF 50V
C434	1-164-096-11	s	CERAMIC 0.01uF 50V
C435	1-124-657-00	s	ELECT 10uF 20% 50V
C436	1-164-075-11	s	CERAMIC 150PF 10% 50VW
C437	1-124-657-00	s	ELECT NONPOLAR 10uF 20% 50V
C438	1-164-096-11	s	CERAMIC 0.01uF 50V
C440	1-164-096-11	s	CERAMIC 0.01uF 50V
C501	1-164-073-11	s	CERAMIC 100PF 5% 50V
C502	1-164-076-11	s	CERAMIC 180PF 10% 50V
C503	1-164-073-11	s	CERAMIC 100PF 10% 50V
C504	1-162-901-11	s	CERAMIC 0.1uF 10% 50V
CN1	1-506-468-11	s	CONNECTOR, 3P, MALE
CN2	1-506-470-11	s	CONNECTOR, 5P, MALE
CN3	1-506-468-11	s	CONNECTOR, 3P, MALE
CN4	1-506-470-11	s	CONNECTOR, 5P, MALE
CN5	1-506-468-11	s	CONNECTOR, 3P, MALE
CN6	1-564-705-11	o	PIN HEADER, STRAIGHT 3P
CN7	1-506-468-11	s	CONNECTOR, 3P, MALE
CN8	1-564-705-11	o	PIN HEADER, STRAIGHT 3P
CN9	1-506-469-11	s	CONNECTOR, 4P, MALE
CN10	1-506-475-11	s	CONNECTOR, 10P, MALE
CN11	1-564-705-11	o	PIN HEADER, STRAIGHT 3P
CN12	1-564-708-11	o	PIN HEADER, STRAIGHT 6P
CN13	1-506-478-11	s	CONNECTOR, 13P, MALE
D1	8-719-911-19	s	DIODE 1SS119
D2	8-719-911-19	s	DIODE 1SS119
D3	8-719-200-02	s	DIODE 10E2
D4	8-719-911-19	s	DIODE 1SS119
D5	8-719-911-19	s	DIODE 1SS119
D8	8-719-911-19	s	DIODE 1SS119
D9	8-719-911-19	s	DIODE 1SS119
D10	8-719-911-19	s	DIODE 1SS119
D11	8-719-200-02	s	DIODE 10E2
D12	8-719-200-02	s	DIODE 10E2
D13	8-719-200-02	s	DIODE 10E2
D14	8-719-200-02	s	DIODE 10E2
D101	8-719-911-19	s	DIODE 1SS119
D102	8-719-911-19	s	DIODE 1SS119
D103	8-719-911-19	s	DIODE 1SS119
D104	8-719-911-19	s	DIODE 1SS119
D105	8-719-911-19	s	DIODE 1SS119
D106	8-719-911-19	s	DIODE 1SS119
D107	8-719-911-19	s	DIODE 1SS119
D108	8-719-911-19	s	DIODE 1SS119
D109	8-719-911-19	s	DIODE 1SS119
D201	8-719-911-19	s	DIODE 1SS119

NOTE: Please see page E-27 for the parts that are not listed in the parts list.

(ADA-18 BOARD)

Ref. No. or Q'ty	Part No.	SP	Description
D202	8-719-911-19	s	DIODE 1SS119
D203	8-719-911-19	s	DIODE 1SS119
D204	8-719-911-19	s	DIODE 1SS119
D205	8-719-911-19	s	DIODE 1SS119
D206	8-719-911-19	s	DIODE 1SS119
D207	8-719-911-19	s	DIODE 1SS119
D208	8-719-911-19	s	DIODE 1SS119
D209	8-719-911-19	s	DIODE 1SS119
D301	8-719-911-19	s	DIODE 1SS119
D401	8-719-911-19	s	DIODE 1SS119
FB1	1-412-694-11	s	INDUCTOR, BEED
FB2	1-412-694-11	s	INDUCTOR, BEED
FB3	1-412-694-11	s	INDUCTOR, BEED
FB4	1-412-694-11	s	INDUCTOR, BEED
FB5	1-412-694-11	s	INDUCTOR, BEED
FB6	1-412-694-11	s	INDUCTOR, BEED
IC1	8-759-999-09	s	IC CS5326-KP
IC2	8-759-996-75	s	IC SM5813APS
IC3	8-759-982-05	s	IC RC7805FA
IC4	8-759-982-38	s	IC RC7905FA
IC5	8-759-916-14	s	IC SN74HC04AN
IC6	8-759-916-14	s	IC SN74HC04AN
IC7	8-759-921-19	s	IC SN74HC161AN
IC8	8-759-916-29	s	IC SN74HC74AN
IC9	8-759-981-89	s	IC RC4556S
IC10	8-759-981-89	s	IC RC4556S
IC11	8-759-916-12	s	IC SN74HC00AN
IC12	8-759-916-29	s	IC SN74HC74AN
IC13	8-759-916-29	s	IC SN74HC74AN
IC101	8-759-900-72	s	IC NE5532P
IC102	8-759-900-72	s	IC NE5532P
IC103	8-759-900-72	s	IC NE5532P
IC201	8-759-900-72	s	IC NE5532P
IC202	8-759-900-72	s	IC NE5532P
IC203	8-759-900-72	s	IC NE5532P
IC301	8-759-998-66	s	IC PCM61P-S
IC302	8-759-900-72	s	IC NE5532P
IC303	8-759-900-72	s	IC NE5532P
IC304	8-759-602-18	s	IC M5219L
IC305	8-759-602-18	s	IC M5219L
IC401	8-759-998-66	s	IC PCM61P-S
IC402	8-759-900-72	s	IC NE5532P
IC403	8-759-900-72	s	IC NE5532P
IC404	8-759-602-18	s	IC M5219L
IC405	8-759-602-18	s	IC M5219L
L1	1-412-533-11	s	COIL 47uH
L2	1-412-533-11	s	COIL 47uH
L3	1-412-533-11	s	COIL 47uH
L4	1-412-533-11	s	COIL 47uH
L5	1-412-533-11	s	COIL 47uH
L6	1-412-533-11	s	COIL 47uH
Q1	8-729-900-36	s	TRANSISTOR DTC124ES
Q2	8-729-900-63	s	TRANSISTOR DTA124ES
Q3	8-729-900-63	s	TRANSISTOR DTA124ES
Q4	8-729-900-36	s	TRANSISTOR DTC124ES
Q5	8-729-900-63	s	TRANSISTOR DTA124ES
Q6	8-729-900-36	s	TRANSISTOR DTC124ES

(ADA-18 BOARD)

Ref. No. or Q'ty	Part No.	SP	Description
Q7	8-729-900-36	s	TRANSISTOR DTC124ES
Q8	8-729-900-63	s	TRANSISTOR DTA124ES
Q9	8-729-900-63	s	TRANSISTOR DTA124ES
Q10	8-729-140-98	s	TRANSISTOR 2SD773-34
Q11	8-729-140-98	s	TRANSISTOR 2SD773-34
Q101	8-729-230-86	s	TRANSISTOR 2SK170-GRBLV
Q102	8-729-230-86	s	TRANSISTOR 2SK170-GRBLV
Q103	8-729-230-86	s	TRANSISTOR 2SK170-GRBLV
Q201	8-729-230-86	s	TRANSISTOR 2SK170-GRBLV
Q202	8-729-230-86	s	TRANSISTOR 2SK170-GRBLV
Q203	8-729-230-86	s	TRANSISTOR 2SK170-GRBLV
Q301	8-729-230-86	s	TRANSISTOR 2SK170-GRBLV
Q302	8-729-141-58	s	TRANSISTOR 2SC2275A-QP
Q303	8-729-230-45	s	TRANSISTOR 2SC2458-YGR
Q304	8-729-141-10	s	TRANSISTOR 2SA985A-QP
Q305	8-729-141-58	s	TRANSISTOR 2SC2275A-QP
Q306	8-729-230-45	s	TRANSISTOR 2SC2458-YGR
Q307	8-729-141-10	s	TRANSISTOR 2SA985A-QP
Q401	8-729-230-86	s	TRANSISTOR 2SK170-GRBLV
Q402	8-729-141-58	s	TRANSISTOR 2SC2275A-QP
Q403	8-729-230-45	s	TRANSISTOR 2SC2458-YGR
Q404	8-729-141-10	s	TRANSISTOR 2SA985A-QP
Q405	8-729-141-58	s	TRANSISTOR 2SC2275A-QP
Q406	8-729-230-45	s	TRANSISTOR 2SC2458-YGR
Q407	8-729-141-10	s	TRANSISTOR 2SA985A-QP
R1	⚠ 1-212-849-00	s	FUSIBLE 4.7 5% 1/4W
R2	⚠ 1-212-849-00	s	FUSIBLE 4.7 5% 1/4W
R3	1-249-437-11	s	CARBON 47K 5% 1/4W
R4	1-249-429-11	s	CARBON 10K 5% 1/4W
R5	1-249-437-11	s	CARBON 47K 5% 1/4W
R6	1-249-437-11	s	CARBON 47K 5% 1/4W
R7	1-249-437-11	s	CARBON 47K 5% 1/4W
R8	1-249-429-11	s	CARBON 10K 5% 1/4W
R9	1-249-405-11	s	CARBON 100 5% 1/4W
R10	1-215-449-00	s	METAL 15K 1% 1/4W
R11	1-249-393-11	s	CARBON 10 5% 1/4W
R12	1-249-397-11	s	CARBON 22 5% 1/4W
R13	1-249-437-11	s	CARBON 47K 5% 1/4W
R14	1-249-397-11	s	CARBON 22 5% 1/4W
R18	1-249-421-11	s	CARBON 2.2K 5% 1/4W
R20	1-249-437-11	s	CARBON 47K 5% 1/4W
R21	1-249-429-11	s	CARBON 10K 5% 1/4W
R22	1-249-429-11	s	CARBON 10K 5% 1/4W
R23	1-249-421-11	s	CARBON 2.2K 5% 1/4W
R24	1-249-429-11	s	CARBON 10K 5% 1/4W
R25	1-249-421-11	s	CARBON 2.2K 5% 1/4W
R26	1-249-429-11	s	CARBON 10K 5% 1/4W
R101	1-215-471-00	s	METAL 120K 1% 1/4W
R102	1-215-471-00	s	METAL 120K 1% 1/4W
R103	1-215-437-00	s	METAL 4.7K 1% 1/4W
R104	1-215-425-00	s	METAL 1.5K 1% 1/4W
R105	1-215-437-00	s	METAL 4.7K 1% 1/4W
R106	1-215-485-00	s	METAL 470K 1% 1/4W
R107	1-215-485-00	s	METAL 470K 1% 1/4W
R108	1-215-449-00	s	METAL 15K 1% 1/4W
R109	1-215-453-00	s	METAL 22K 1% 1/4W
R110	1-215-405-00	s	METAL 220 1% 1/4W
R111	1-215-429-00	s	METAL 2.2K 1% 1/4W
R112	1-215-405-00	s	METAL 220 1% 1/4W

NOTE: Please see page E-27 for the parts that are not listed in the parts list.

(ADA-18 BOARD)

Ref. No. or Q'ty	Part No.	SP	Description
R113	1-215-429-00	s	METAL 2.2K 1% 1/4W
R114	1-215-449-00	s	METAL 15K 1% 1/4W
R115	1-215-453-00	s	METAL 22K 1% 1/4W
R116	1-215-469-00	s	METAL 100K 1% 1/4W
R117	1-215-421-00	s	METAL 1K 1% 1/4W
R118	1-215-477-00	s	METAL 220K 1% 1/4W
R119	1-215-421-00	s	METAL 1K 1% 1/4W
R120	1-215-428-00	s	METAL 2K 1% 1/4W
R121	1-215-445-00	s	METAL 10K 1% 1/4W
R122	1-215-475-00	s	METAL 180K 1% 1/4W
R123	1-215-445-00	s	METAL 10K 1% 1/4W
R124	1-215-429-00	s	METAL 2.2K 1% 1/4W
R125	1-215-467-00	s	METAL 82K 1% 1/4W
R126	1-215-485-00	s	METAL 470K 1% 1/4W
R127	1-249-417-11	s	CARBON 1K 5% 1/4W
R128	1-249-441-11	s	CARBON 100K 5% 1/4W
R129	1-215-469-00	s	METAL 100K 1% 1/4W
R130	1-215-445-00	s	METAL 10K 1% 1/4W
R131	1-215-445-00	s	METAL 10K 1% 1/4W
R132	1-215-469-00	s	METAL 100K 1% 1/4W
R133	1-249-435-11	s	CARBON 33K 5% 1/4W
R134	1-249-417-11	s	CARBON 1K 5% 1/4W
R135	1-249-441-11	s	CARBON 100K 5% 1/4W
R136	1-249-441-11	s	CARBON 100K 5% 1/4W
R137	1-215-421-00	s	METAL 1K 1% 1/4W
R138	1-215-421-00	s	METAL 1K 1% 1/4W
R139	1-215-469-00	s	METAL 100K 1% 1/4W
R140	1-215-493-00	s	METAL 1M 1% 1/4W
R141	1-215-469-00	s	METAL 100K 1% 1/4W
R142	1-215-469-00	s	METAL 100K 1% 1/4W
R143	1-215-453-00	s	METAL 22K 1% 1/4W
R144	1-215-453-00	s	METAL 22K 1% 1/4W
R145	1-215-390-00	s	METAL 51 1% 1/4W
R146	1-215-390-00	s	METAL 51 1% 1/4W
R147	1-215-493-00	s	METAL 1M 1% 1/4W
R201	1-215-471-00	s	METAL 120K 1% 1/4W
R202	1-215-471-00	s	METAL 120K 1% 1/4W
R203	1-215-437-00	s	METAL 4.7K 1% 1/4W
R204	1-215-425-00	s	METAL 1.5K 1% 1/4W
R205	1-215-437-00	s	METAL 4.7K 1% 1/4W
R206	1-215-485-00	s	METAL 470K 1% 1/4W
R207	1-215-485-00	s	METAL 470K 1% 1/4W
R208	1-215-449-00	s	METAL 15K 1% 1/4W
R209	1-215-453-00	s	METAL 22K 1% 1/4W
R210	1-215-405-00	s	METAL 220 1% 1/4W
R211	1-215-429-00	s	METAL 2.2K 1% 1/4W
R212	1-215-405-00	s	METAL 220 1% 1/4W
R213	1-215-429-00	s	METAL 2.2K 1% 1/4W
R214	1-215-449-00	s	METAL 15K 1% 1/4W
R215	1-215-453-00	s	METAL 22K 1% 1/4W
R216	1-215-469-00	s	METAL 100K 1% 1/4W
R217	1-215-421-00	s	METAL 1K 1% 1/4W
R218	1-215-477-00	s	METAL 220K 1% 1/4W
R219	1-215-421-00	s	METAL 1K 1% 1/4W
R220	1-215-428-00	s	METAL 2K 1% 1/4W
R221	1-215-445-00	s	METAL 10K 1% 1/4W
R222	1-215-475-00	s	METAL 180K 1% 1/4W
R223	1-215-445-00	s	METAL 10K 1% 1/4W
R224	1-215-429-00	s	METAL 2.2K 1% 1/4W

(ADA-18 BOARD)

Ref. No. or Q'ty	Part No.	SP	Description
R225	1-215-467-00	s	METAL 82K 1% 1/4W
R226	1-215-485-00	s	METAL 470K 1% 1/4W
R227	1-249-417-11	s	CARBON 1K 5% 1/4W
R228	1-249-441-11	s	CARBON 100K 5% 1/4W
R229	1-215-469-00	s	METAL 100K 1% 1/4W
R230	1-215-445-00	s	METAL 10K 1% 1/4W
R231	1-215-445-00	s	METAL 10K 1% 1/4W
R232	1-215-469-00	s	METAL 100K 1% 1/4W
R233	1-249-435-11	s	CARBON 33K 5% 1/4W
R234	1-249-417-11	s	CARBON 1K 5% 1/4W
R235	1-249-441-11	s	CARBON 100K 5% 1/4W
R236	1-249-441-11	s	CARBON 100K 5% 1/4W
R237	1-215-421-00	s	METAL 1K 1% 1/4W
R238	1-215-421-00	s	METAL 1K 1% 1/4W
R239	1-215-469-00	s	METAL 100K 1% 1/4W
R240	1-215-493-00	s	METAL 1M 1% 1/4W
R241	1-215-469-00	s	METAL 100K 1% 1/4W
R242	1-215-469-00	s	METAL 100K 1% 1/4W
R243	1-215-453-00	s	METAL 22K 1% 1/4W
R244	1-215-453-00	s	METAL 22K 1% 1/4W
R245	1-215-390-00	s	METAL 51 1% 1/4W
R246	1-215-390-00	s	METAL 51 1% 1/4W
R247	1-215-493-00	s	METAL 1M 1% 1/4W
R301	1-215-493-00	s	METAL 1M 1% 1/4W
R302	1-215-485-00	s	METAL 470K 1% 1/4W
R303	1-215-476-00	s	METAL 200K 1% 1/4W
R304	1-215-429-00	s	METAL 2.2K 1% 1/4W
R305	1-215-426-00	s	METAL 1.6K 1% 1/4W
R306	1-215-426-00	s	METAL 1.6K 1% 1/4W
R307	1-215-426-00	s	METAL 1.6K 1% 1/4W
R308	1-215-445-00	s	METAL 10K 1% 1/4W
R309	1-215-445-00	s	METAL 10K 1% 1/4W
R310	1-215-469-00	s	METAL 100K 1% 1/4W
R311	1-215-445-00	s	METAL 10K 1% 1/4W
R312	1-215-445-00	s	METAL 10K 1% 1/4W
R313	1-215-429-00	s	METAL 2.2K 1% 1/4W
R314	1-215-467-00	s	METAL 82K 1% 1/4W
R315	1-215-485-00	s	METAL 470K 1% 1/4W
R316	1-249-417-11	s	CARBON 1K 5% 1/4W
R317	1-249-441-11	s	CARBON 100K 5% 1/4W
R318	1-215-445-00	s	METAL 10K 1% 1/4W
R319	1-215-439-00	s	METAL 5.6K 1% 1/4W
R320	1-215-469-00	s	METAL 100K 1% 1/4W
R321	1-215-425-00	s	METAL 1.5K 1% 1/4W
R322	1-215-469-00	s	METAL 100K 1% 1/4W
R323	1-215-469-00	s	METAL 100K 1% 1/4W
R324	1-215-445-00	s	METAL 10K 1% 1/4W
R325	1-215-445-00	s	METAL 10K 1% 1/4W
R326	1-215-444-00	s	METAL 9.1K 1% 1/4W
R327	1-215-418-00	s	METAL 750 1% 1/4W
R328	1-215-445-00	s	METAL 10K 1% 1/4W
R329	1-215-445-00	s	METAL 10K 1% 1/4W
R330	1-215-453-00	s	METAL 22K 1% 1/4W
R331	1-215-425-00	s	METAL 1.5K 1% 1/4W
R332	1-215-425-00	s	METAL 1.5K 1% 1/4W
R333	1-215-453-00	s	METAL 22K 1% 1/4W
R334	1-215-453-00	s	METAL 22K 1% 1/4W
R335	1-215-425-00	s	METAL 1.5K 1% 1/4W
R336	1-215-425-00	s	METAL 1.5K 1% 1/4W

NOTE: Please see page E-27 for the parts that are not listed in the parts list.

(ADA-18 BOARD)

Ref. No. or Q'ty	Part No.	SP	Description
R337	1-215-453-00	s	METAL 22K 1% 1/4W
R338	1-214-810-00	s	METAL 5.6 1% 1/2W
R339	1-214-810-00	s	METAL 5.6 1% 1/2W
R340	1-214-810-00	s	METAL 5.6 1% 1/2W
R341	1-214-810-00	s	METAL 5.6 1% 1/2W
R342	1-214-852-00	s	METAL 330 1% 1/2W
R343	1-214-824-91	s	METAL 22 1% 1/2W
R344	1-214-839-00	s	METAL 91 1% 1/2W
R345	1-214-839-00	s	METAL 91 1% 1/2W
R346	1-214-824-91	s	METAL 22 1% 1/2W
R347	1-214-852-00	s	METAL 330 1% 1/2W
R348	1-215-452-00	s	METAL 20K 1% 1/4W
R349	1-215-421-00	s	METAL 1K 1% 1/4W
R350	1-215-452-00	s	METAL 20K 1% 1/4W
R351	1-215-421-00	s	METAL 1K 1% 1/4W
R352	1-215-469-00	s	METAL 100K 1% 1/4W
R353	1-215-416-00	s	METAL 620 1% 1/4W
R354	1-215-438-00	s	METAL 5.1K 1% 1/4W
R355	1-215-449-00	s	METAL 15K 1% 1/4W
R356	1-215-445-00	s	METAL 10K 1% 1/4W
R357	1-215-445-00	s	METAL 10K 1% 1/4W
R358	1-215-469-00	s	METAL 100K 1% 1/4W
R359	1-214-844-00	s	METAL 150 1% 1/2W
R360	1-215-441-00	s	METAL 6.8K 1% 1/4W
R361	1-215-485-00	s	METAL 470K 1% 1/4W
R362	1-215-421-00	s	METAL 1K 1% 1/4W
R363	1-215-423-00	s	METAL 1.2K 1% 1/4W
R364	1-215-445-00	s	METAL 10K 1% 1/4W
R365	1-215-469-00	s	METAL 100K 1% 1/4W
R366	1-214-844-00	s	METAL 150 1% 1/2W
R401	1-215-493-00	s	METAL 1M 1% 1/4W
R402	1-215-485-00	s	METAL 470K 1% 1/4W
R403	1-215-476-00	s	METAL 200K 1% 1/4W
R404	1-215-429-00	s	METAL 2.2K 1% 1/4W
R405	1-215-426-00	s	METAL 1.6K 1% 1/4W
R406	1-215-426-00	s	METAL 1.6K 1% 1/4W
R407	1-215-426-00	s	METAL 1.6K 1% 1/4W
R408	1-215-445-00	s	METAL 10K 1% 1/4W
R409	1-215-445-00	s	METAL 10K 1% 1/4W
R410	1-215-469-00	s	METAL 100K 1% 1/4W
R411	1-215-445-00	s	METAL 10K 1% 1/4W
R412	1-215-445-00	s	METAL 10K 1% 1/4W
R413	1-215-429-00	s	METAL 2.2K 1% 1/4W
R414	1-215-467-00	s	METAL 82K 1% 1/4W
R415	1-215-485-00	s	METAL 470K 1% 1/4W
R416	1-249-417-11	s	CARBON 1K 5% 1/4W
R417	1-249-441-11	s	CARBON 100K 5% 1/4W
R418	1-215-445-00	s	METAL 10K 1% 1/4W
R419	1-215-439-00	s	METAL 5.6K 1% 1/4W
R420	1-215-469-00	s	METAL 100K 1% 1/4W
R421	1-215-425-00	s	METAL 1.5K 1% 1/4W
R422	1-215-469-00	s	METAL 100K 1% 1/4W
R423	1-215-469-00	s	METAL 100K 1% 1/4W
R424	1-215-445-00	s	METAL 10K 1% 1/4W
R425	1-215-445-00	s	METAL 10K 1% 1/4W
R426	1-215-444-00	s	METAL 9.1K 1% 1/4W
R427	1-215-418-00	s	METAL 750 1% 1/4W
R428	1-215-445-00	s	METAL 10K 1% 1/4W
R429	1-215-445-00	s	METAL 10K 1% 1/4W

(ADA-18 BOARD)

Ref. No. or Q'ty	Part No.	SP	Description
R430	1-215-453-00	s	METAL 22K 1% 1/4W
R431	1-215-425-00	s	METAL 1.5K 1% 1/4W
R432	1-215-425-00	s	METAL 1.5K 1% 1/4W
R433	1-215-453-00	s	METAL 22K 1% 1/4W
R434	1-215-453-00	s	METAL 22K 1% 1/4W
R435	1-215-425-00	s	METAL 1.5K 1% 1/4W
R436	1-215-425-00	s	METAL 1.5K 1% 1/4W
R437	1-215-453-00	s	METAL 22K 1% 1/4W
R438	1-214-810-00	s	METAL 5.6 1% 1/2W
R439	1-214-810-00	s	METAL 5.6 1% 1/2W
R440	1-214-810-00	s	METAL 5.6 1% 1/2W
R441	1-214-810-00	s	METAL 5.6 1% 1/2W
R442	1-214-852-00	s	METAL 330 1% 1/2W
R443	1-214-824-91	s	METAL 22 1% 1/2W
R444	1-214-839-00	s	METAL 91 1% 1/2W
R445	1-214-839-00	s	METAL 91 1% 1/2W
R446	1-214-824-91	s	METAL 22 1% 1/2W
R447	1-214-852-00	s	METAL 330 1% 1/2W
R448	1-215-452-00	s	METAL 20K 1% 1/4W
R449	1-215-421-00	s	METAL 1K 1% 1/4W
R450	1-215-452-00	s	METAL 20K 1% 1/4W
R451	1-215-421-00	s	METAL 1K 1% 1/4W
R452	1-215-469-00	s	METAL 100K 1% 1/4W
R453	1-215-416-00	s	METAL 620 1% 1/4W
R454	1-215-438-00	s	METAL 5.1K 1% 1/4W
R455	1-215-449-00	s	METAL 15K 1% 1/4W
R456	1-215-445-00	s	METAL 10K 1% 1/4W
R457	1-215-445-00	s	METAL 10K 1% 1/4W
R458	1-215-469-00	s	METAL 100K 1% 1/4W
R459	1-214-844-00	s	METAL 150 1% 1/2W
R460	1-215-441-00	s	METAL 6.8K 1% 1/4W
R461	1-215-485-00	s	METAL 470K 1% 1/4W
R462	1-215-421-00	s	METAL 1K 1% 1/4W
R463	1-215-423-00	s	METAL 1.2K 1% 1/4W
R464	1-215-445-00	s	METAL 10K 1% 1/4W
R465	1-215-469-00	s	METAL 100K 1% 1/4W
R466	1-214-844-00	s	METAL 150 1% 1/2W
R501	1-249-397-11	s	CARBON 22 5% 1/4W
R502	1-249-397-11	s	CARBON 22 5% 1/4W
R503	1-249-397-11	s	CARBON 22 5% 1/4W
R505	1-215-397-00	s	METAL 100 1% 1/4W
R506	1-215-397-00	s	METAL 100 1% 1/4W
R507	1-215-397-00	s	METAL 100 1% 1/4W
R508	1-215-397-00	s	METAL 100 1% 1/4W
R509	1-215-421-00	s	METAL 1K 1% 1/4W
R510	1-215-397-00	s	METAL 100 1% 1/4W
R511	1-215-421-00	s	METAL 1K 1% 1/4W
R512	1-215-397-00	s	METAL 100 1% 1/4W
R513	1-215-445-00	s	METAL 10K 1% 1/4W
R514	1-215-445-00	s	METAL 10K 1% 1/4W
R515	1-215-453-00	s	METAL 22K 1% 1/4W
R516	1-215-453-00	s	METAL 22K 1% 1/4W
R517	1-215-475-00	s	METAL 180 1% 1/4W
RV101	1-238-803-11	s	RES, ADJ, CERMET 20K
RV102	1-238-803-11	s	RES, ADJ, CERMET 20K
RV201	1-238-803-11	s	RES, ADJ, CERMET 20K
RV202	1-238-803-11	s	RES, ADJ, CERMET 20K
RV301	1-238-805-11	s	RES, ADJ, CERMET 100K

NOTE: Please see page E-27 for the parts that are not listed in the parts list.

(ADA-18 BOARD)

Ref. No. or Q'ty	Part No.	SP	Description
RV302	1-238-802-11	s	RES, ADJ, CERMET 10K
RV303	1-238-803-11	s	RES, ADJ, CERMET 20K
RV401	1-238-805-11	s	RES, ADJ, CERMET 100K
RV402	1-238-802-11	s	RES, ADJ, CERMET 10K
RV403	1-238-803-11	s	RES, ADJ, CERMET 20K
RY1	1-515-677-11	s	RELAY
RY2	1-515-677-11	s	RELAY
RY301	1-515-677-11	s	RELAY
RY401	1-515-677-11	s	RELAY
S1	1-553-977-00	s	SWITCH, SLIDE
S101	1-552-573-00	s	SWITCH, SLIDE
S201	1-552-573-00	s	SWITCH, SLIDE
S301	1-552-573-00	s	SWITCH, SLIDE
S401	1-552-573-00	s	SWITCH, SLIDE

CP-157A/CP-157B BOARD

Ref. No. or Q'ty	Part No.	SP	Description
1pc	1-637-277-11	o	PC BOARD, CP-157A
C1	1-101-004-00	s	CERAMIC 0.01uF 50V0%
C2	1-102-973-00	s	CERAMIC 100PF 5% 50V
C3	1-102-973-00	s	CERAMIC 100PF 5% 50V
CN1	1-565-282-11	o	CONNECTOR, XLR 3P, FEMALE

CP-158 BOARD

Ref. No. or Q'ty	Part No.	SP	Description
1pc	1-637-282-12	o	PC BOARD, CP-158
1pc	7-682-547-04	s	SCREW +B 3X6
C1, C2	1-101-004-00	s	CERAMIC 0.01uF 50V0% (Up to Serial No. J:10050, UC:20025, EK:50065)
CN1	1-506-469-11	s	CONNECTOR, 4P, MALE
FB1	1-412-694-11	s	INDUCTOR, BEAD
FB2	1-412-694-11	s	INDUCTOR, BEAD
FB3	1-412-694-11	s	INDUCTOR, BEAD
FB4	1-412-694-11	s	INDUCTOR, BEAD
J1	1-507-863-51	s	JACK, PHONE
J2	1-507-863-51	s	JACK, PHONE

CP-171 BOARD

Ref. No. or Q'ty	Part No.	SP	Description
1pc	1-637-276-11	o	PC BOARD, CP-171
CN1	1-506-472-11	o	CONNECTOR, 7P, MALE
CN2	1-506-472-11	o	CONNECTOR, 7P, MALE
CN3	1-506-473-11	s	CONNECTOR, 8P, MALE
CN4	1-506-473-11	s	CONNECTOR, 8P, MALE
CN5	1-506-469-11	s	CONNECTOR, 4P, MALE
CN6	1-506-469-11	s	CONNECTOR, 4P, MALE
CN7	1-506-471-11	s	CONNECTOR, 6P, MALE
CN8	1-506-471-11	s	CONNECTOR, 6P, MALE
CN9	1-506-477-11	s	CONNECTOR, 12P, MALE
CN10	1-506-477-11	s	CONNECTOR, 12P, MALE
CN11	1-506-478-11	s	CONNECTOR, 13P, MALE
CN12	1-506-478-11	s	CONNECTOR, 13P, MALE

CP-172A/CP-172C BOARD

Ref. No. or Q'ty	Part No.	SP	Description
1pc	1-637-280-11	o	PC BOARD, CP-172A
C1	1-101-004-00	s	CERAMIC 0.01uF 50V0% (For CP-172A)
	1-102-973-00	s	CERAMIC 100PF 5% 50V (For CP-172C)
C2	1-102-973-00	s	CERAMIC 100PF 5% 50V (For CP-172A)
	1-101-004-00	s	CERAMIC 0.01uF 50V0% (For CP-172C)
C3	1-102-973-00	s	CERAMIC 100PF 5% 50V
CN1	1-565-281-11	o	CONNECTOR, XLR 3P MALE
CN2	1-506-468-11	s	CONNECTOR, 3P, MALE

NOTE: Please see page E-27 for the parts that are not listed in the parts list.

CP-172B/CP-172D BOARD

Ref. No. or Q'ty	Part No.	SP	Description
1pc	1-637-281-11	o	PC BOARD, CP-172B
C1	1-101-004-00	s	CERAMIC 0.01uF 50V0% (For CP-172B)
	1-102-973-00	s	CERAMIC 100PF 5% 50V (For CP-172D)
C2	1-102-973-00	s	CERAMIC 100PF 5% 50V (For CP-172B)
	1-101-004-00	s	CERAMIC 0.01uF 50V0% (For CP-172D)
C3	1-102-973-00	s	CERAMIC 100PF 5% 50V
CN1	1-565-281-11	o	CONNECTOR, XLR 3P, MALE
CN2	1-506-468-11	s	CONNECTOR, 3P, MALE

CP-173A BOARD

Ref. No. or Q'ty	Part No.	SP	Description
1pc	1-637-291-12	o	PC BOARD, CP-173A
C1	1-101-004-00	s	CERAMIC 0.01uF 50V0% (Up to Serial No. J:10050, UC:20025, EK:50065)
CN1	1-565-282-11	o	CONNECTOR, XLR 3P, FEMALE
CN2	1-506-468-11	s	CONNECTOR, 3P, MALE
FB1	1-535-178-00	s	BEAD, FERRITE
FB2	1-535-178-00	s	BEAD, FERRITE
FB3	1-535-178-00	s	BEAD, FERRITE

CP-173B BOARD

Ref. No. or Q'ty	Part No.	SP	Description
1pc	1-637-292-12	o	PC BOARD, CP-173B
C1	1-101-004-00	s	CERAMIC 0.01uF 50V0% (Up to Serial No. J:10050, UC:20025, EK:50065)
CN1	1-565-281-11	o	CONNECTOR, XLR 3P MALE
CN2	1-506-468-11	s	CONNECTOR, 3P, MALE
FB1	1-535-178-00	s	BEAD, FERRITE
FB2	1-535-178-00	s	BEAD, FERRITE
FB3	1-535-178-00	s	BEAD, FERRITE

DC-47 BOARD

Ref. No. or Q'ty	Part No.	SP	Description
1pc	A-7850-817-A	o	COMPLETE PCB, DC-47
(This assembly includes the following parts.)			
C1	1-124-921-61	s	ELECT 470uF 20% 63VW
C2	1-126-163-11	s	ELECT 4.7uF 20% 50V
C3	1-124-911-11	s	ELECT 220uF 20% 50V
C4	1-130-495-00	s	MYLAR 0.1uF 5% 50V
C5	1-130-495-00	s	MYLAR 0.1uF 5% 50V
CN1	1-564-243-00	o	PIN, CONNECTOR 6P
CN2	1-564-242-00	o	PIN, CONNECTOR 5P
CN3	1-564-706-11	o	PIN HEADER, STRAIGHT 4P
CN4	1-564-210-00	o	PIN HEADER, STRAIGHT 12P
CN5	1-564-705-11	o	PIN HEADER, STRAIGHT 3P
CN6	1-564-209-00	o	PIN HEADER, STRAIGHT 10P
CN7	1-564-709-11	o	PIN HEADER, STRAIGHT 7P
CN8	1-564-707-11	o	CONNECTOR, 5P, MALE
CN9	1-506-469-11	s	CONNECTOR, 4P, MALE
D1	8-719-200-02	s	DIODE 10E2
D2	8-719-200-02	s	DIODE 10E2
D3	8-719-200-02	s	DIODE 10E2
D4	8-719-200-02	s	DIODE 10E2
D5	8-719-934-25	s	DIODE HZS33-1L
D6	8-719-200-02	s	DIODE 10E2
D7	8-719-910-61	s	DIODE HZ6A1L
Q1	8-729-400-81	s	TRANSISTOR 2SD1266-Q
R1	⚠ 1-212-865-00	s	FUSIBLE 22 5% 1/4W
R2	1-249-429-11	s	CARBON 10K 5% 1/4W
R3	1-249-433-11	s	CARBON 22K 5% 1/4W
R4	1-249-409-11	s	CARBON 220 5% 1/4W
R5	1-249-409-11	s	CARBON 220 5% 1/4W

NOTE: Please see page E-27 for the parts that are not listed in the parts list.

DIO-10 BOARD

Ref. No. or Q'ty	Part No.	SP	Description
1pc	A-7850-809-A	o	COMPLETE PCB, DIO-10
(This assembly includes the following parts.)			
1pc	3-167-943-01	o	CASE (UPPER), SHIELD, SP
1pc	3-167-944-02	o	CASE (LOWER), SHIELD, SP
1pc	3-167-945-02	o	CASE (INNER), SHIELD, SP
2pcs	7-621-284-30	s	SCREW +P 2.6X8
2pcs	7-622-207-05	s	N 2.6, TYPE 2
C101	1-136-169-00	s	MYLAR 0.22uF 5% 50V
C102	1-136-169-00	s	MYLAR 0.22uF 5% 50V
C105	1-164-232-11	s	CERAMIC 0.01uF 10% 50VOW
C106	1-163-128-00	s	CERAMIC 300PF 5% 50VOW
C107	1-163-989-11	s	CERAMIC 0.033uF 10% 25VOW
C108	1-164-232-11	s	CERAMIC 0.01uF 10% 50VOW
C201	1-164-182-11	s	CERAMIC 0.0033uF 10% 100V
C202	1-164-232-11	s	CERAMIC 0.01uF 10% 50VOW
C203	1-164-182-11	s	CERAMIC 0.0033uF 10% 100V
C204	1-130-491-00	s	MYLAR 0.047uF 5% 50V
C205	1-164-232-11	s	CERAMIC 0.01uF 10% 50VOW
C207	1-164-161-11	s	CERAMIC, CHIP 0.0022uF 10% 100V
C208	1-164-232-11	s	CERAMIC 0.01uF 10% 50VOW
C209	1-162-901-11	s	CERAMIC 0.1uF 10% 50VOW
C210	1-164-232-11	s	CERAMIC 0.01uF 10% 50VOW
C212	1-163-009-11	s	CERAMIC, CHIP 0.001uF 10% 50V
C213	1-162-901-11	s	CERAMIC 0.1uF 10% 50VOW
C215	1-164-232-11	s	CERAMIC 0.01uF 10% 50VOW
C301	1-164-232-11	s	CERAMIC 0.01uF 10% 50VOW
C303	1-164-232-11	s	CERAMIC 0.01uF 10% 50VOW
C304	1-164-232-11	s	CERAMIC 0.01uF 10% 50VOW
C401	1-164-232-11	s	CERAMIC 0.01uF 10% 50VOW
C403	1-164-232-11	s	CERAMIC 0.01uF 10% 50VOW
C404	1-164-232-11	s	CERAMIC 0.01uF 10% 50VOW
C501	1-164-232-11	s	CERAMIC 0.01uF 10% 50VOW
C502	1-164-232-11	s	CERAMIC 0.01uF 10% 50VOW
C504	1-164-232-11	s	CERAMIC 0.01uF 10% 50VOW
C505	1-164-232-11	s	CERAMIC 0.01uF 10% 50VOW
C506	1-164-232-11	s	CERAMIC 0.01uF 10% 50VOW
C507	1-164-232-11	s	CERAMIC 0.01uF 10% 50VOW
C601	1-164-232-11	s	CERAMIC 0.01uF 10% 50VOW
C604	1-136-169-00	s	MYLAR 0.22uF 5% 50V
C605	1-136-169-00	s	MYLAR 0.22uF 5% 50V
C701	1-164-232-11	s	CERAMIC 0.01uF 10% 50VOW
C801	1-164-232-11	s	CERAMIC 0.01uF 10% 50VOW
C901	1-164-232-11	s	CERAMIC 0.01uF 10% 50VOW
C1001	1-164-232-11	s	CERAMIC 0.01uF 10% 50VOW
C1002	1-164-232-11	s	CERAMIC 0.01uF 10% 50VOW
C1202	1-164-232-11	s	CERAMIC 0.01uF 10% 50VOW
CN1	1-506-471-11	s	CONNECTOR, 6P, MALE
CN2	1-506-471-11	s	CONNECTOR, 6P, MALE
CN3	1-506-750-11	o	PIN, DIN CONNECTOR (DIP) 48P
CN4	1-564-705-11	o	PIN HEADER, STRAIGHT 3P
D1	8-719-911-19	s	DIODE 1SS119
D2	8-719-911-19	s	DIODE 1SS119
D3	8-719-911-19	s	DIODE 1SS119
D4	8-719-911-19	s	DIODE 1SS119
D5	8-719-907-19	s	DIODE, VARICAP FC52M-5
D6	8-719-911-19	s	DIODE 1SS119
D7	8-719-911-19	s	DIODE 1SS119

(DIO-10 BOARD)

Ref. No. or Q'ty	Part No.	SP	Description
D8	8-719-911-19	s	DIODE 1SS119
D9	8-719-911-19	s	DIODE 1SS119
D10	8-719-911-19	s	DIODE 1SS119
D11	8-719-911-19	s	DIODE 1SS119
D12	8-719-200-77	s	DIODE 10E2N
D13	8-719-911-19	s	DIODE 1SS119
D14	8-719-911-19	s	DIODE 1SS119
D15	8-719-911-19	s	DIODE 1SS119
D16	8-719-911-19	s	DIODE 1SS119
FB1	1-543-256-11	s	BEAD, FERRITE
FB2	1-543-256-11	s	BEAD, FERRITE
FB3	1-543-256-11	s	BEAD, FERRITE
FB4	1-543-256-11	s	BEAD, FERRITE
FB5	1-543-256-11	s	BEAD, FERRITE
FB6	1-543-256-11	s	BEAD, FERRITE
FB7	1-543-256-11	s	BEAD, FERRITE
FB8	1-543-256-11	s	BEAD, FERRITE
FB9	1-543-256-11	s	BEAD, FERRITE
FB10	1-543-256-11	s	BEAD, FERRITE
FB11	1-543-256-11	s	BEAD, FERRITE
FB12	1-543-256-11	s	BEAD, FERRITE
FB13	1-543-256-11	s	BEAD, FERRITE
FB14	1-543-256-11	s	BEAD, FERRITE
FB15	1-543-256-11	s	BEAD, FERRITE
IC1	8-759-923-64	s	IC AM26LS32ACNS
IC2	8-759-040-44	s	IC MC4044P
IC3	8-759-030-59	s	IC MC1648P-1
IC4	8-759-927-29	s	IC SN74HCU04ANS
IC5	8-759-923-65	s	IC AM26LS31CNS
IC6	8-759-926-77	s	IC SN74HC541ANS
IC7	8-759-951-21	s	IC SN75121N
IC8	8-759-926-77	s	IC SN74HC541ANS
IC9	8-759-951-24	s	IC SN75124N
IC10	8-759-946-53	s	IC CXD1147Q
IC11	8-759-946-53	s	IC CXD1147Q
IC12	8-759-151-36	s	IC CXD8134Q
IC13	8-759-927-46	s	IC SN74HC00ANS
IC14	8-759-008-52	s	IC MC74HC123AF
IC15	8-759-925-74	s	IC SN74HC04ANS
IC16	8-759-982-21	s	IC RC78L05A
L1	1-426-259-11	s	COIL, RF
L2	1-412-533-11	s	COIL 47uH
Q1	8-729-385-51	s	TRANSISTOR 2SC2855-D
Q2	8-729-202-62	s	TRANSISTOR 2SD1221
R101	1-216-026-00	s	METAL 110 5% 1/10W
R105	1-216-125-00	s	METAL 1.5M 5% 1/10W
R802	1-216-308-00	s	METAL 4.7 5% 1/10W
RY1	1-515-622-11	s	RELAY
T1	1-437-194-12	s	TRANSPORMER, PULSE
T2	1-437-194-12	s	TRANSPORMER, PULSE

NOTE: Please see page E-27 for the parts that are not listed in the parts list.

DR-139 BOARD

Ref. No. or Q'ty	Part No.	SP	Description
1pc	A-7850-783-A	o	COMPLETE PCB, DR-139
(This assembly includes the following part.)			
C102	1-135-177-21	s	TANTAL 1uF 20% 25VOW
C103	1-135-177-21	s	TANTAL 1uF 20% 25VOW
C104	1-135-177-21	s	TANTAL 1uF 20% 25VOW
C106	1-163-024-00	s	CERAMIC 0.018uF 10% 50VOW
C107	1-135-177-21	s	TANTAL 1uF 20% 25VOW
C108	1-135-177-21	s	TANTAL 1uF 20% 25VOW
C109	1-135-177-21	s	TANTAL 1uF 20% 25VOW
C110	1-135-177-21	s	TANTAL 1uF 20% 25VOW
C112	1-164-232-11	s	CERAMIC 0.01uF 10% 50VOW
C113	1-124-589-11	s	ELECT 47uF 20% 16V
C114	1-164-232-11	s	CERAMIC 0.01uF 10% 50VOW
C115	1-126-103-11	s	ELECT 470uF 20% 16V
C117	1-135-177-21	s	TANTAL 1uF 20% 25VOW
C121	1-135-177-21	s	TANTAL 1uF 20% 25VOW
C122	1-164-232-11	s	CERAMIC 0.01uF 10% 50VOW
C123	1-164-232-11	s	CERAMIC 0.01uF 10% 50VOW
C124	1-124-589-11	s	ELECT 47uF 20% 16V
C125	1-124-589-11	s	ELECT 47uF 20% 16V
C126	1-124-589-11	s	ELECT 47uF 20% 16V
C132	1-124-589-11	s	ELECT 47uF 20% 16V
C133	1-164-232-11	s	CERAMIC 0.01uF 10% 50VOW
C134	1-164-232-11	s	CERAMIC 0.01uF 10% 50VOW
C136	1-164-232-11	s	CERAMIC 0.01uF 10% 50VOW
C137	1-164-232-11	s	CERAMIC 0.01uF 10% 50VOW
C201	1-125-675-11	s	CAP 0.043PF
C202	1-125-675-11	s	CAP 0.043PF
C203	1-164-232-11	s	CERAMIC 0.01uF 10% 50VOW
C204	1-164-232-11	s	CERAMIC 0.01uF 10% 50VOW
C205	1-124-257-00	s	ELECT 2.2uF 20% 50V
C206	1-164-232-11	s	CERAMIC 0.01uF 10% 50VOW
C207	1-124-589-11	s	ELECT 47uF 20% 16V
C208	1-126-157-11	s	ELECT 10uF 20% 16V
C209	1-124-589-11	s	ELECT 47uF 20% 16V
C210	1-126-157-11	s	ELECT 10uF 20% 16V
C211	1-164-232-11	s	CERAMIC 0.01uF 10% 50VOW
C212	1-164-161-11	s	CERAMIC, CHIP 0.0022uF 10% 100V
C213	1-164-232-11	s	CERAMIC 0.01uF 10% 50VOW
C214	1-164-232-11	s	CERAMIC 0.01uF 10% 50VOW
C215	1-164-161-11	s	CERAMIC, CHIP 0.0022uF 10% 100V
C216	1-164-232-11	s	CERAMIC 0.01uF 10% 50VOW
C217	1-126-176-11	s	ELECT 220uF 20% 10V
C218	1-164-232-11	s	CERAMIC 0.01uF 10% 50VOW
C219	1-164-232-11	s	CERAMIC 0.01uF 10% 50VOW
C220	1-164-232-11	s	CERAMIC 0.01uF 10% 50VOW
C221	1-164-232-11	s	CERAMIC 0.01uF 10% 50VOW
C222	1-164-232-11	s	CERAMIC 0.01uF 10% 50VOW
CN101	1-563-370-11	o	CONNECTOR, F,P,C 14P
CN102	1-506-478-11	s	CONNECTOR 13P, MALE
CN103	1-564-515-11	o	PLUG, CONNECTOR 12P
CN104	1-563-597-11	s	CONNECTOR, FLEXIBLE 20P
CN105	1-565-568-11	o	PIN, CONNECTOR (PC BOARD) 2P
CN106	1-506-470-11	s	CONNECTOR 5P, MALE
CN107	1-564-505-11	o	PLUG, CONNECTOR 2P
CN108	1-565-189-11	s	CONNECTOR, FPC 36P
CN109	1-564-707-11	o	CONNECTOR, 5P, MALE

(DR-139 BOARD)

Ref. No. or Q'ty	Part No.	SP	Description
D201	8-719-981-00	s	DIODE ERC81-004
D202	8-719-400-18	s	DIODE MA152WK
D203	8-719-400-18	s	DIODE MA152WK
D204	8-719-400-18	s	DIODE MA152WK
D205	8-719-400-18	s	DIODE MA152WK
D206	8-719-400-18	s	DIODE MA152WK
D207	8-719-400-18	s	DIODE MA152WK
D208	8-719-200-77	s	DIODE 10E2N
D209	8-719-400-18	s	DIODE MA152WK
D210	8-719-400-18	s	DIODE MA152WK
IC101	8-752-039-31	s	IC CXA1418N
IC102	8-752-017-40	s	IC CX20174
IC103	8-759-983-69	s	IC LM358PS
IC104	8-759-300-71	s	IC HD14053BFP
IC105	1-464-940-11	s	DRIVE UNIT, MOTOR
IC106	8-759-925-80	s	IC SN74HC14ANS
IC107	8-759-239-23	s	IC TC74HC86AF
IC201	8-759-908-81	s	IC MB3763PF
IC202	8-759-925-76	s	IC SN74HC08ANS
IC203	8-759-908-81	s	IC MB3763PF
IC204	8-759-989-91	s	IC TL7705ACPS
IC205	8-759-008-67	s	IC MC14066BF
IC206	8-759-929-26	s	IC TL431CPS
IC207	8-759-983-69	s	IC LM358PS
IC208	8-759-988-13	s	IC LM393PS
IC209	8-759-988-13	s	IC LM393PS
L101	1-408-425-00	s	INDUCTOR 220uH
L102	1-412-533-11	s	COIL 47uH
L103	1-412-533-11	s	COIL 47uH
L201	1-408-425-00	s	INDUCTOR 220uH
Q101	8-729-901-00	s	TRANSISTOR DTC124EK
Q102	8-729-901-00	s	TRANSISTOR DTC124EK
Q103	8-729-216-22	s	TRANSISTOR 2SA1162
Q104	8-729-208-96	s	TRANSISTOR 2SA1242-Y
Q105	8-729-202-62	s	TRANSISTOR 2SD1221
Q201	8-729-901-00	s	TRANSISTOR DTC124EK
Q202	8-729-901-00	s	TRANSISTOR DTC124EK
Q203	8-729-901-00	s	TRANSISTOR DTC124EK
Q204	8-729-901-00	s	TRANSISTOR DTC124EK
Q205	8-729-901-00	s	TRANSISTOR DTC124EK
Q206	8-729-901-00	s	TRANSISTOR DTC124EK
Q207	8-729-104-93	s	TRANSISTOR 2SB1040A-3
Q208	8-729-202-62	s	TRANSISTOR 2SD1221
Q209	8-729-923-54	s	TRANSISTOR DTA143TK
Q210	8-729-923-54	s	TRANSISTOR DTA143TK
R104	1-216-666-11	s	METAL, CHIP 4.3K 0.5% 1/10W
R105	1-216-075-00	s	METAL, CHIP 12K 5% 1/10W
R106	1-216-093-00	s	METAL, CHIP 68K 5% 1/10W
R121	1-216-687-11	s	METAL, CHIP 33K 0.5% 1/10W
R122	1-216-687-11	s	METAL, CHIP 33K 0.5% 1/10W
R124	1-216-646-11	s	METAL, CHIP 620 0.5% 1/10W
R128	1-216-113-00	s	METAL, CHIP 470K 5% 1/10W
R217	1-216-470-00	s	METAL 18 5% 3W
R219	1-216-662-11	s	METAL, CHIP 3K 0.5% 1/10W
R220	1-216-677-11	s	METAL, CHIP 12K 0.5% 1/10W
R239	1-216-666-11	s	METAL, CHIP 4.3K 0.5% 1/10W
R240	1-216-047-00	s	METAL, CHIP 820 5% 1/10W

NOTE: Please see page E-27 for the parts that are not listed in the parts list.

(DR-139 BOARD)

Ref. No. or Q'ty	Part No.	SP	Description
R241	1-216-686-11	s	METAL, CHIP 30K 0.5% 1/10W
R244	1-216-115-00	s	METAL, CHIP 560K 5% 1/10W
RB1	1-231-411-00	s	RESISTOR BLOCK 100Kx8
RB2	1-231-557-00	s	RESISTOR BLOCK 100Kx4
RV101	1-238-804-21	s	RES, ADJ, CERMET 50K
RV102	1-238-804-21	s	RES, ADJ, CERMET 50K
RV103	1-238-804-21	s	RES, ADJ, CERMET 50K
SW201	1-570-602-11	s	SWITCH, DIP 2-CKT
SW202	1-570-602-11	s	SWITCH, DIP 2-CKT

HP-48 BOARD

Ref. No. or Q'ty	Part No.	SP	Description
1pc	1-506-847-11	o	HOUSING, BOARD IN CONNECTOR 10P
1pc	1-563-184-11	o	HOUSING, CONNECTOR 10P
1pc	1-637-283-14	o	PC BOARD, HP-48
C1	1-161-379-00	s	CERAMIC, 0.01uF 20% 25V
C2	1-161-379-00	s	CERAMIC, 0.01uF 20% 25V
FB1	1-412-694-11	s	INDUCTOR, BEAD
FB2	1-412-694-11	s	INDUCTOR, BEAD
FB3	1-412-694-11	s	INDUCTOR, BEAD

KY-192 BOARD

Ref. No. or Q'ty	Part No.	SP	Description

This board includes the LED-104, SW-420 boards.

1pc	A-7850-797-A	o	COMPLETE PCB, KY-192

(This assembly includes the following parts.)

1pc	1-466-469-11	s	ROTARY ENCORDER (MAGNETIC)
1pc	3-167-806-01	o	TABLE, ENCORDER
1pc	7-682-903-11	s	SCREW +PWH 3X6
4pcs	7-685-136-19	s	SCREW +P 2.6X5 TYPE2 N-S
1pc	7-685-903-11	s	SCREW +PTPWH 3X8 (TYPE2)
C4	1-161-379-00	s	CERAMIC 0.01uF 20% 25V
C6	1-161-379-00	s	CERAMIC 0.01uF 20% 25V
C7	1-161-379-00	s	CERAMIC 0.01uF 20% 25V
C8	1-161-379-00	s	CERAMIC 0.01uF 20% 25V
C9	1-161-379-00	s	CERAMIC 0.01uF 20% 25V
C10	1-161-379-00	s	CERAMIC 0.01uF 20% 25V
C11	1-161-379-00	s	CERAMIC 0.01uF 20% 25V
C12	1-161-379-00	s	CERAMIC 0.01uF 20% 25V
C13	1-161-379-00	s	CERAMIC 0.01uF 20% 25V
C14	1-161-379-00	s	CERAMIC 0.01uF 20% 25V
C15	1-161-379-00	s	CERAMIC 0.01uF 20% 25V
C17	1-161-379-00	s	CERAMIC 0.01uF 20% 25V
C18	1-161-379-00	s	CERAMIC 0.01uF 20% 25V
CN1	1-506-475-11	s	CONNECTOR, 10P, MALE
CN2	1-506-473-11	s	CONNECTOR, 8P, MALE
CN3	1-506-473-11	s	CONNECTOR, 8P, MALE
CN4	1-506-475-11	s	CONNECTOR, 10P, MALE
CN5	1-506-475-11	s	CONNECTOR, 10P, MALE
CN6	1-566-982-11	o	PIN HEADER, STRAIGHT 9P
CN7	1-506-474-11	s	CONNECTOR, 9P, MALE
D1	8-719-911-19	s	DIODE 1SS119
D2	8-719-911-19	s	DIODE 1SS119
D3	8-719-911-19	s	DIODE 1SS119
D4	8-719-911-19	s	DIODE 1SS119
D5	8-719-911-19	s	DIODE 1SS119
D6	8-719-911-19	s	DIODE 1SS119
D7	8-719-911-19	s	DIODE 1SS119
D8	8-719-911-19	s	DIODE 1SS119
D9	8-719-911-19	s	DIODE 1SS119
D10	8-719-911-19	s	DIODE 1SS119
D11	8-719-911-19	s	DIODE 1SS119
D12	8-719-911-19	s	DIODE 1SS119
D13	8-719-911-19	s	DIODE 1SS119
D14	8-719-911-19	s	DIODE 1SS119
D15	8-719-911-19	s	DIODE 1SS119
D16	8-719-911-19	s	DIODE 1SS119
D17	8-719-911-19	s	DIODE 1SS119
D18	8-719-911-19	s	DIODE 1SS119
D19	8-719-911-19	s	DIODE 1SS119
D20	8-719-911-19	s	DIODE 1SS119
D21	8-719-911-19	s	DIODE 1SS119
D22	8-719-911-19	s	DIODE 1SS119
D23	8-719-911-19	s	DIODE 1SS119
D24	8-719-911-19	s	DIODE 1SS119
D25	8-719-911-19	s	DIODE 1SS119
D26	8-719-911-19	s	DIODE 1SS119
D27	8-719-911-19	s	DIODE 1SS119
D28	8-719-911-19	s	DIODE 1SS119

NOTE: Please see page E-27 for the parts that are not listed in the parts list.

(KY-192 BOARD)

Ref. No. or Q'ty	Part No.	SP	Description
D29	8-719-988-10	s	DIODE EBG5734S
D30	8-719-988-10	s	DIODE EBG5734S
D31	8-719-988-10	s	DIODE EBG5734S
D32	8-719-988-10	s	DIODE EBG5734S
D33	8-719-988-10	s	DIODE EBG5734S
D34	8-719-988-10	s	DIODE EBG5734S
D35	8-719-988-10	s	DIODE EBG5734S
D36	8-719-988-10	s	DIODE EBG5734S
D37	8-719-988-10	s	DIODE EBG5734S
D38	8-719-988-10	s	DIODE EBG5734S
D39	8-719-988-09	s	DIODE PY5734S
D40	8-719-988-10	s	DIODE EBG5734S
D41	8-719-988-10	s	DIODE EBG5734S
D53	8-719-911-19	s	DIODE 1SS119
D54	8-719-911-19	s	DIODE 1SS119
D55	8-719-911-19	s	DIODE 1SS119
D56	8-719-911-19	s	DIODE 1SS119
FB1	1-535-178-00	s	BEAD, FERRITE
FL1	1-519-642-11	s	INDICATOR TUBE, FLUORESCENT
JW5	1-217-666-31	s	RES, SHORT 0.01 1/6W
JW12	1-217-666-31	s	RES, SHORT 0.01 1/6W
JW117	1-217-666-31	s	RES, SHORT 0.01 1/6W
JW118	1-217-666-31	s	RES, SHORT 0.01 1/6W
IC1	8-759-926-11	s	IC SN74HC138ANS
IC2	8-759-926-77	s	IC SN74HC541ANS
IC3	8-759-926-77	s	IC SN74HC541ANS
IC4	8-759-500-05	s	IC MSM6338MS-K
IC5	8-759-927-46	s	IC SN74HC00ANS
IC6	8-759-513-50	s	IC MSC62408-018GS-V1K
IC7	8-759-205-37	s	IC TC74HC574F
IC8	8-759-205-37	s	IC TC74NC574F
IC9	8-759-205-37	s	IC TC74HC574F
IC10	8-759-205-37	s	IC TC74HC574F
L1	1-412-533-11	s	COIL 47uH
L2	1-412-533-11	s	COIL 47uH
Q1	8-729-900-98	s	TRANSISTOR DTC143TK
Q2	8-729-900-98	s	TRANSISTOR DTC143TK
Q3	8-729-900-98	s	TRANSISTOR DTC143TK
Q4	8-729-900-98	s	TRANSISTOR DTC143TK
Q5	8-729-900-98	s	TRANSISTOR DTC143TK
Q6	8-729-900-98	s	TRANSISTOR DTC143TK
Q7	8-729-900-98	s	TRANSISTOR DTC143TK
Q8	8-729-900-98	s	TRANSISTOR DTC143TK
Q9	8-729-900-98	s	TRANSISTOR DTC143TK
Q10	8-729-901-04	s	TRANSISTOR DTA114EK
Q11	8-729-901-47	s	TRANSISTOR DTA143EK
Q12	8-729-901-47	s	TRANSISTOR DTA143EK
Q13	8-729-901-04	s	TRANSISTOR DTA114EK
Q14	8-729-901-47	s	TRANSISTOR DTA143EK
Q15	8-729-901-47	s	TRANSISTOR DTA143EK
Q16	8-729-901-47	s	TRANSISTOR DTA143EK
Q17	8-729-901-04	s	TRANSISTOR DTA114EK
Q18	8-729-901-04	s	TRANSISTOR DTA114EK
Q19	8-729-901-04	s	TRANSISTOR DTA114EK
Q20	8-729-901-04	s	TRANSISTOR DTA114EK
Q21	8-729-901-04	s	TRANSISTOR DTA114EK

(KY-192 BOARD)

Ref. No. or Q'ty	Part No.	SP	Description
Q22	8-729-901-04	s	TRANSISTOR DTA114EK
Q23	8-729-901-04	s	TRANSISTOR DTA114EK
Q24	8-729-901-04	s	TRANSISTOR DTA114EK
Q25	8-729-901-04	s	TRANSISTOR DTA114EK
Q26	8-729-901-04	s	TRANSISTOR DTA114EK
Q27	8-729-901-04	s	TRANSISTOR DTA114EK
Q28	8-729-901-04	s	TRANSISTOR DTA114EK
Q29	8-729-901-04	s	TRANSISTOR DTA114EK
Q30	8-729-901-04	s	TRANSISTOR DTA114EK
Q31	8-729-901-04	s	TRANSISTOR DTA114EK
Q32	8-729-901-04	s	TRANSISTOR DTA114EK
Q33	8-729-901-04	s	TRANSISTOR DTA114EK
Q34	8-729-901-04	s	TRANSISTOR DTA114EK
Q35	8-729-901-04	s	TRANSISTOR DTA114EK
Q36	8-729-901-04	s	TRANSISTOR DTA114EK
R1	1-249-441-11	s	CARBON 100K 5% 1/4W
R2	1-249-441-11	s	CARBON 100K 5% 1/4W
R3	1-249-441-11	s	CARBON 100K 5% 1/4W
R4	1-249-441-11	s	CARBON 100K 5% 1/4W
R5	1-249-441-11	s	CARBON 100K 5% 1/4W
R6	1-249-441-11	s	CARBON 100K 5% 1/4W
R7	1-249-441-11	s	CARBON 100K 5% 1/4W
R8	1-249-441-11	s	CARBON 100K 5% 1/4W
R9	1-249-441-11	s	CARBON 100K 5% 1/4W
R10	1-249-429-11	s	CARBON 10K 5% 1/4W
R11	1-249-429-11	s	CARBON 10K 5% 1/4W
R12	1-249-429-11	s	CARBON 10K 5% 1/4W
R13	1-249-429-11	s	CARBON 10K 5% 1/4W
R14	1-249-429-11	s	CARBON 10K 5% 1/4W
R15	1-249-429-11	s	CARBON 10K 5% 1/4W
R16	1-249-429-11	s	CARBON 10K 5% 1/4W
R17	1-249-429-11	s	CARBON 10K 5% 1/4W
R18	1-249-397-11	s	CARBON 22 5% 1/4W
R19	1-249-403-11	s	CARBON 68 5% 1/4W
R20	1-249-403-11	s	CARBON 68 5% 1/4W
R21	1-249-397-11	s	CARBON 22 5% 1/4W
R22	1-249-399-11	s	CARBON 33 5% 1/4W
R23	1-249-399-11	s	CARBON 33 5% 1/4W
R24	1-249-409-11	s	CARBON 220 5% 1/4W
R25	1-249-408-11	s	CARBON 180 5% 1/4W
R26	1-249-409-11	s	CARBON 220 5% 1/4W
R27	1-249-409-11	s	CARBON 220 5% 1/4W
R28	1-249-408-11	s	CARBON 180 5% 1/4W
R29	1-249-408-11	s	CARBON 180 5% 1/4W
R30	1-249-408-11	s	CARBON 180 5% 1/4W
R31	1-249-397-11	s	CARBON 22 5% 1/4W
R32	1-249-397-11	s	CARBON 22 5% 1/4W
R33	1-249-408-11	s	CARBON 180 5% 1/4W
R34	1-249-408-11	s	CARBON 180 5% 1/4W
R35	1-249-408-11	s	CARBON 180 5% 1/4W
R36	1-249-408-11	s	CARBON 180 5% 1/4W
R37	1-249-408-11	s	CARBON 180 5% 1/4W
R38	1-249-408-11	s	CARBON 180 5% 1/4W
R39	1-249-408-11	s	CARBON 180 5% 1/4W
R40	1-249-408-11	s	CARBON 180 5% 1/4W
R41	1-249-408-11	s	CARBON 180 5% 1/4W
R42	1-249-408-11	s	CARBON 180 5% 1/4W
R43	1-249-408-11	s	CARBON 180 5% 1/4W
R44	1-249-408-11	s	CARBON 180 5% 1/4W

NOTE: Please see page E-27 for the parts that are not listed in the parts list.

(KY-192 BOARD)

Ref. No. or Q'ty	Part No.	SP	Description
R45	1-249-405-11	s	CARBON 100 5% 1/4W
R46	1-249-397-11	s	CARBON 22 5% 1/4W
R47	1-249-397-11	s	CARBON 22 5% 1/4W
R48	1-249-397-11	s	CARBON 22 5% 1/4W
R49	1-249-405-11	s	CARBON 100 5% 1/4W
R50	1-249-405-11	s	CARBON 100 5% 1/4W
R51	1-249-405-11	s	CARBON 100 5% 1/4W
R52	1-249-425-11	s	CARBON 4.7K 5% 1/4W
R53	1-249-425-11	s	CARBON 4.7K 5% 1/4W
R54	1-249-425-11	s	CARBON 4.7K 5% 1/4W
R55	1-249-425-11	s	CARBON 4.7K 5% 1/4W
R56	1-249-425-11	s	CARBON 4.7K 5% 1/4W
R57	1-249-425-11	s	CARBON 4.7K 5% 1/4W
R58	1-249-437-11	s	CARBON 47K 5% 1/4W
R59	1-249-437-11	s	CARBON 47K 5% 1/4W
R60	1-249-437-11	s	CARBON 47K 5% 1/4W
R61	1-249-437-11	s	CARBON 47K 5% 1/4W
R62	1-249-437-11	s	CARBON 47K 5% 1/4W
R63	1-249-437-11	s	CARBON 47K 5% 1/4W
R64	1-249-437-11	s	CARBON 47K 5% 1/4W
R65	1-249-429-11	s	CAR8ON 10K 5% 1/4W
R66	1-249-429-11	s	CARBON 10K 5% 1/4W
R67	1-249-429-11	s	CARBON 10K 5% 1/4W
R68	1-249-429-11	s	CARBON 10K 5% 1/4W
R69	1-249-429-11	s	CARBON 10K 5% 1/4W
R70	1-249-437-11	s	CARBON 47K 5% 1/4W
R71	1-249-437-11	s	CARBON 47K 5% 1/4W
R72	1-249-437-11	s	CARBON 47K 5% 1/4W
R73	1-249-437-11	s	CARBON 47K 5% 1/4W
R74	1-249-437-11	s	CARBON 47K 5% 1/4W
S1	1-571-169-11	s	SWITCH, WITH LED, TACTILE [EJECT]
S2	1-571-167-71	s	SWITCH, TACTIL [STANDBY]
S3	1-572-609-21	s	SWITCH, PUSH (ILLUMINATION) [STOP]
S4	1-572-607-21	s	SWITCH, PUSH (ILLUMINATION) [REW]
S5	1-572-607-11	s	SWITCH, PUSH (ILLUMINATION) [FF]
S6	1-554-937-11	s	SWITCH, KEY BOARD
S7	1-572-609-11	s	SWITCH, PUSH (ILLUMINATION) [PLAY]
S8	1-572-608-11	s	SWITCH, PUSH (ILLUMINATION) [REC]
S9	1-571-167-81	s	SWITCH, TACTIL [PREVIOUS]
S10	1-571-167-91	s	SWITCH, TACTIL [NEXT]
S11	1-554-937-11	s	SWITCH, KEY BOARD
S12	1-554-937-11	s	SWITCH, KEY BOARD
S13	1-554-937-11	s	SWITCH, KEY BOARD
S14	1-554-937-11	s	SWITCH, KEY BOARD
S15	1-554-937-11	s	SWITCH, KEY BOARD
S16	1-554-937-11	s	SWITCH, KEY BOARD
S17	1-554-937-11	s	SWITCH, KEY BOARD
S18	1-554-937-11	s	SWITCH, KEY BOARD
S19	1-554-937-11	s	SWITCH, KEY BOARD
S20	1-554-937-11	s	SWITCH, KEY BOARD
S21	1-554-937-11	s	SWITCH, KEY BOARD
S22	1-554-937-11	s	SWITCH, KEY BOARD
S23	1-554-937-11	s	SWITCH, KEY BOARD
S24	1-571-156-11	o	SWITCH, TOGGLE
S25	1-571-157-11	o	SWITCH, TOGGLE
S26	1-571-156-11	o	SWITCH, TOGGLE
S27	1-571-156-11	o	SWITCH, TOGGLE

LE-90A BOARD

Ref. No. or Q'ty	Part No.	SP	Description
1pc	1-637-285-12	o	PC BOARD, LE-90A
D1	8-719-820-27	s	DIODE TLY256

LE-90B BOARD

Ref. No. or Q'ty	Part No.	SP	Description
1pc	1-637-286-12	o	PC BOARD, LE-90B
D1	8-719-820-27	s	LED TLY-256, YEL

LED-104 BOARD

Ref. No. or Q'ty	Part No.	SP	Description
1pc	1-637-269-11	o	PC BOARD, LED-104
D44	8-719-812-41	s	LED TLR124, RED
D45	8-719-812-41	s	LED TLR124, RED
D46	8-719-934-33	s	DIODE PY3432S
D47	8-719-902-26	s	DIODE SLR-34PG5
D48	8-719-934-33	s	DIODE PY3432S
JW1	1-535-901-11	o	WIRE, JUMPER

NOTE: Please see page E-27 for the parts that are not listed in the parts list.

MEM-40A BOARD

Ref. No. or Q'ty	Part No.	SP	Description
1pc	A-7850-811-A	o	COMPLETE PCB, MEM-40A
(This assembly includes the following parts.)			
2pcs	7-621-775-40	s	SCREW +B 2.6X8
2pcs	7-622-207-05	s	N 2.6, TYPE 2
C3	1-126-177-11	s	ELECT 100uF 20% 10V
C22	1-126-154-11	s	ELECT 47uF 20% 6.3V
CN1	1-506-750-11	o	PIN, DIN CONNECTOR (DIP) 48P
D1	8-719-938-68	s	DIODE GL3HY8
D2	8-719-800-26	s	DIODE TLUG164
D3	8-719-800-26	s	DIODE TLUG164
D4	8-719-800-56	s	DIODE TLUR164
IC1	8-759-152-60	s	IC CXD8163AQ
IC2	8-759-996-99	s	IC TMS44C256-10SDL
IC3	8-759-996-99	s	IC TMS44C256-10SDL
IC4	8-759-996-99	s	IC TMS44C256-10SDL
IC5	8-759-996-99	s	IC TMS44C256-10SDL
IC6	8-759-996-99	s	IC TMS44C256-10SDL
IC7	8-759-996-99	s	IC TMS44C256-10SDL
IC8	8-759-996-99	s	IC TMS44C256-10SDL
IC9	8-759-996-99	s	IC TMS44C256-10SDL
IC10	8-752-331-87	s	IC CXD1160AP
IC11	8-752-331-87	s	IC CXD1160AP
L1	1-412-533-11	s	COIL 47uH
L2	1-412-533-11	s	COIL 47uH

PS-211 BOARD

Ref. No. or Q'ty	Part No.	SP	Description
1pc	A-7850-815-A	o	COMPLETE PCB, PS-211
(This assembly includes the following parts.)			
2pcs	7-682-547-09	s	SCREW +B 3X6
2pcs	7-682-903-11	s	SCREW +PWH 3X6
C1	1-108-626-11	s	MYLAR 0.01uF 10% 1000W
C2	1-108-626-11	s	MYLAR 0.01uF 10% 1000W
C3	1-108-626-11	s	MYLAR 0.01uF 10% 1000W
C4	1-108-626-11	s	MYLAR 0.01uF 10% 1000W
C5	1-126-548-11	s	ELECT 4700uF 20% 35VOW
C6	1-126-548-11	s	ELECT 4700uF 20% 35VOW
C7	1-164-096-11	s	CERAMIC 0.01uF 50V
C8	1-164-096-11	s	CERAMIC 0.01uF 50V
C10	1-164-096-11	s	CERAMIC 0.01uF 50V
C12	1-164-096-11	s	CERAMIC 0.01uF 50V
C13	1-136-193-11	s	FILM 0.47uF 5% 2500W
C14	1-136-193-11	s	FILM 0.47uF 5% 2500W
C15	1-108-626-11	s	MYLAR 0.01uF 10% 1000W
C16	1-108-626-11	s	MYLAR 0.01uF 10% 1000W
C17	1-108-626-11	s	MYLAR 0.01uF 10% 1000W
C18	1-108-626-11	s	MYLAR 0.01uF 10% 1000W
C19	1-126-548-11	s	ELECT 4700uF 20% 35VOW
C20	1-126-548-11	s	ELECT 4700uF 20% 35VOW
C22	1-164-096-11	s	CERAMIC 0.01uF 50V
C23	1-162-901-11	s	CERAMIC 0.1uF 10% 50VOW
C24	1-164-096-11	s	CERAMIC 0.01uF 50V
C27	1-164-096-11	s	CERAMIC 0.01uF 50V
C28	1-162-901-11	s	CERAMIC 0.1uF 10% 50VOW
C29	1-164-096-11	s	CERAMIC 0.01uF 50V
C32	1-164-096-11	s	CERAMIC 0.01uF 50V
C33	1-162-901-11	s	CERAMIC 0.1uF 10% 50VOW
C34	1-164-096-11	s	CERAMIC 0.01uF 50V
C37	1-164-096-11	s	CERAMIC 0.01uF 50V
C38	1-162-901-11	s	CERAMIC 0.1uF 10% 50VOW
C39	1-164-096-11	s	CERAMIC 0.01uF 50V
C43	1-124-903-11	s	ELECT 1uF 20% 50VOW
CN1	1-566-313-11	o	PIN, CONNECTOR 7P
CN2	1-566-982-11	o	PIN HEADER, STRAIGHT 9P
CN3	1-564-705-11	o	PIN HEADER, STRAIGHT 3P
D1	8-719-200-02	s	DIODE 10E2
D2	8-719-200-02	s	DIODE 10E2
D3	8-719-200-02	s	DIODE 10E2
D4	8-719-200-02	s	DIODE 10E2
D5	8-719-200-02	s	DIODE 10E2
D6	8-719-200-02	s	DIODE 10E2
D7	8-719-200-02	s	DIODE 10E2
D8	8-719-200-02	s	DIODE 10E2
D9	8-719-109-81	s	DIODE RD4.7ES-B2
D10	8-719-109-81	s	DIODE RD4.7ES-B2
D11	8-719-109-81	s	DIODE RD4.7ES-B2
D12	8-719-109-81	s	DIODE RD4.7ES-B2
D13	8-719-200-02	s	DIODE 10E2
D14	8-719-200-02	s	DIODE 10E2
D15	8-719-200-02	s	DIODE 10E2
D16	8-719-200-02	s	DIODE 10E2
D17	8-719-110-41	s	DIODE RD15ES-B2

NOTE: Please see page E-27 for the parts that are not listed in the parts list.

(PS-211 BOARD)

Ref. No. or Q'ty	Part No.	SP	Description
D18	8-719-110-41	s	DIODE RD15ES-B2
D19	8-719-911-19	s	DIODE 1SS119
D20	8-719-110-53	s	DIODE RD20ES-B2
D21	8-719-911-19	s	DIODE 1SS119
D22	8-719-911-19	s	DIODE 1SS119
IC1	8-759-154-55	s	PS2601-L
IC2	8-759-982-15	s	IC RC7815FA
IC3	8-759-982-41	s	IC RC7915FA
IC4	8-759-982-17	s	IC RC7818FA
IC5	8-759-982-42	s	IC RC7918FA
IC6	8-759-982-17	s	IC RC7818FA
IC7	8-759-982-42	s	IC RC7918FA
Q1	8-729-202-35	s	TRANSISTOR 2SB906-Y
Q2	8-729-202-35	s	TRANSISTOR 2SB906-Y
Q3	8-729-202-62	s	TRANSISTOR 2SD1221-Y
Q4	8-729-202-62	s	TRANSISTOR 2SD1221-Y
Q5	8-729-202-35	s	TRANSISTOR 2SB906-Y
Q6	8-729-202-35	s	TRANSISTOR 2SB906-Y
Q7	8-729-202-62	s	TRANSISTOR 2SD1221-Y
Q8	8-729-202-62	s	TRANSISTOR 2SD1221-Y
Q9	8-729-142-25	s	TRANSISTOR 2SD1020-HFE
Q10	8-729-142-25	s	TRANSISTOR 2SD1020-HFE
Q11	8-729-900-36	s	TRANSISTOR DTC124ES
R1	⚠ 1-212-934-00	s	FUSIBLE 1 5% 1/2W
R2	⚠ 1-212-934-00	s	FUSIBLE 1 5% 1/2W
R3	1-249-429-11	s	CARBON 10K 5% 1/4W
R4	1-249-429-11	s	CARBON 10K 5% 1/4W
R5	⚠ 1-212-813-11	s	RES, FUSIBLE 47 1/4W
R6	1-214-616-00	s	METAL 6.2 1% 1/4W
R7	1-201-667-00	s	WIREWOUND 220 10% 3W
R8	1-249-429-11	s	CARBON 10K 5% 1/4W
R9	1-249-433-11	s	CARBON 22K 5% 1/4W
R10	1-249-431-11	s	CARBON 15K 5% 1/4W
R11	1-214-676-00	s	METAL 6.2 1% 1/4W
R12	1-201-667-00	s	WIREWOUND 220 10% 3W
R13	1-249-433-11	s	CARBON 22K 5% 1/4W
R14	1-249-429-11	s	CARBON 10K 5% 1/4W
R15	1-249-431-11	s	CARBON 15K 5% 1/4W
R16	1-214-676-00	s	METAL 6.2 1% 1/4W
R17	1-201-667-00	s	WIREWOUND 220 10% 3W
R18	1-249-429-11	s	CARBON 10K 5% 1/4W
R19	1-249-433-11	s	CARBON 22K 5% 1/4W
R20	1-249-431-11	s	CARBON 15K 5% 1/4W
R21	1-214-616-00	s	METAL 6.2 1% 1/4W
R22	1-207-667-00	s	WIREWOUND 220 10% 3W
R23	1-249-433-11	s	CARBON 22K 5% 1/4W
R24	1-249-429-11	s	CARBON 10K 5% 1/4W
R25	1-249-431-11	s	CARBON 15K 5% 1/4W
R26	1-249-427-11	s	CARBON 6.8K 5% 1/4W
R27	1-249-427-11	s	CARBON 6.8K 5% 1/4W
R28	1-249-427-11	s	CARBON 6.8K 5% 1/4W
R29	1-249-435-11	s	CARBON 33K 5% 1/4W
R30	1-249-437-11	s	CARBON 47K 5% 1/4W
R31	1-249-419-11	s	CARBON 1.5K 5% 1/4W
R32	1-249-429-11	s	CARBON 10K 5% 1/4W
R33	1-249-429-11	s	CARBON 10K 5% 1/4W
R34	1-249-423-11	s	CARBON 3.3K 5% 1/4W

RF-31 BOARD

Ref. No. or Q'ty	Part No.	SP	Description
C3	1-135-125-21	s	TANTALUM, CHIP 33uF 20% 10V
C102	1-135-125-21	s	TANTALUM, CHIP 33uF 20% 10V
C103	1-162-927-11	s	CERAMIC, CHIP 100PF 5% 50V
C104	1-135-155-21	s	TANTAL CHIP 4.7uF 10% 16V
C105	1-162-962-11	s	CERAMIC 470PF 10% 50V
C107	1-162-957-11	s	CERAMIC 220PF 5% 50V
C108	1-162-964-11	s	CERAMIC 0.001uF 10% 50V
C112	1-162-957-11	s	CERAMIC 220PF 5% 50V
C113	1-162-957-11	s	CERAMIC 220PF 5% 50V
C115	1-135-125-21	s	TANTALUM, CHIP 33uF 20% 10V
C116	1-162-927-11	s	CERAMIC, CHIP 100PF 5% 50V
C117	1-135-073-00	s	TANTALUM, CHIP 0.33uF 10% 35V
C118	1-164-492-11	s	CERAMIC 0.15uF 10% 16V
C120	1-162-964-11	s	CERAMIC 0.001uF 10% 50V
C122	1-135-125-21	s	TANTALUM, CHIP 33uF 20% 10V
C124	1-135-125-21	s	TANTALUM, CHIP 33uF 20% 10V
C125	1-162-964-11	s	CERAMIC 0.001uF 10% 50V
C127	1-164-492-11	s	CERAMIC 0.15uF 10% 16V
C128	1-135-073-00	s	TANTALUM, CHIP 0.33uF 10% 35V
C129	1-162-927-11	s	CERAMIC, CHIP 100PF 5% 50V
C130	1-162-967-11	s	CERAMIC 0.0033uF 10% 50V
C132	1-135-125-21	s	TANTALUM, CHIP 33uF 20% 10V
C133	1-162-964-11	s	CERAMIC 0.001uF 10% 50V
C202	1-135-125-21	s	TANTALUM, CHIP 33uF 20% 10V
C203	1-162-927-11	s	CERAMIC, CHIP 100PF 5% 50V
C204	1-135-155-21	s	TANTAL CHIP 4.7uF 10% 16V
C205	1-162-962-11	s	CERAMIC 470PF 10% 50V
C207	1-162-957-11	s	CERAMIC 220PF 5% 50V
C212	1-162-957-11	s	CERAMIC 220PF 5% 50V
C213	1-162-957-11	s	CERAMIC 220PF 5% 50V
C215	1-135-125-21	s	TANTALUM, CHIP 33uF 20% 10V
C216	1-162-927-11	s	CERAMIC, CHIP 100PF 5% 50V
C217	1-135-073-00	s	TANTALUM, CHIP 0.33uF 10% 35V
C218	1-164-492-11	s	CERAMIC 0.15uF 10% 16V
C220	1-162-964-11	s	CERAMIC 0.001uF 10% 50V
C222	1-135-125-21	s	TANTALUM, CHIP 33uF 20% 10V
C224	1-135-125-21	s	TANTALUM, CHIP 33uF 20% 10V
C225	1-162-964-11	s	CERAMIC 0.001uF 10% 50V
C227	1-164-492-11	s	CERAMIC 0.15uF 10% 16V
C228	1-135-073-00	s	TANTALUM, CHIP 0.33uF 10% 35V
C229	1-162-927-11	s	CERAMIC, CHIP 100PF 5% 50V
C230	1-162-967-11	s	CERAMIC 0.0033uF 10% 50V
C232	1-135-125-21	s	TANTALUM, CHIP 33uF 20% 10V
C233	1-162-964-11	s	CERAMIC 0.001uF 10% 50V
CN1	1-566-838-11	o	CONNECTOR, F.P.C 15P
CN2	1-562-883-11	o	CONNECTOR, FPC 20P, FEMALE
CN3	1-562-708-11	o	CONNECTOR, FPC 13P, FEMALE
IC1	8-752-039-01	s	IC CXA1364R
IC2	8-752-039-01	s	IC CXA1364R
L1	1-408-785-21	s	INDUCTOR CHIP 47UH
L101	1-408-785-21	s	INDUCTOR CHIP 47UH
L102	1-408-785-21	s	INDUCTOR CHIP 47UH
L103	1-408-785-21	s	INDUCTOR CHIP 47UH
L201	1-408-785-21	s	INDUCTOR CHIP 47UH
L202	1-408-785-21	s	INDUCTOR CHIP 47UH
L203	1-408-785-21	s	INDUCTOR CHIP 47UH

NOTE: Please see page E-27 for the parts that are not listed in the parts list.

(RF-31 BOARD)

Ref. No. or Q'ty	Part No.	SP	Description
Q101, Q201	8-729-901-00	s	TRANSISTOR DTC124EK (Up to Serial No. J:10090, UC:20055, EK:50175)
R101	1-216-679-11	s	METAL, CHIP 15K 0.5% 1/10W
R102	1-216-693-11	s	METAL, CHIP 56K 0.5% 1/10W
R103	1-216-687-11	s	METAL, CHIP 33K 0.5% 1/10W
R104	1-216-835-11	s	METAL, CHIP 15K 5% 1/16W
R105	1-216-835-11	s	METAL, CHIP 15K 5% 1/16W
R106	1-216-835-11	s	METAL, CHIP 15K 5% 1/16W
R107	1-216-836-11	s	METAL, CHIP 18K 5% 1/16W
R108	1-216-834-11	s	METAL, CHIP 12K 5% 1/16W
R109	1-216-836-11	s	METAL, CHIP 18K 5% 1/16W
R110	1-216-835-11	s	METAL, CHIP 15K 5% 1/16W
R111	1-216-835-11	s	METAL, CHIP 15K 5% 1/16W
R112	1-216-835-11	s	METAL, CHIP 15K 5% 1/16W
R113	1-216-671-11	s	METAL, CHIP 6.8K 0.5% 1/10W
R114	1-216-671-11	s	METAL, CHIP 6.8K 0.5% 1/10W
R115	1-216-673-11	s	METAL, CHIP 8.2K 0.5% 1/10W
R116	1-216-673-11	s	METAL, CHIP 8.2K 0.5% 1/10W
R117	1-216-845-11	s	METAL CHIP 100K 5% 1/16W (UP to Serial No. J:10090, UC:20055, EK:50175)
R118	1-216-842-11	s	METAL, CHIP 56K 5% 1/16W
R119	1-216-683-11	s	METAL, CHIP 22K 0.5% 1/10W
R201	1-216-679-11	s	METAL, CHIP 15K 0.5% 1/10W
R202	1-216-693-11	s	METAL, CHIP 56K 0.5% 1/10W
R203	1-216-687-11	s	METAL, CHIP 33K 0.5% 1/10W
R204	1-216-835-11	s	METAL, CHIP 15K 5% 1/16W
R205	1-216-835-11	s	METAL, CHIP 15K 5% 1/16W
R206	1-216-835-11	s	METAL, CHIP 15K 5% 1/16W
R207	1-216-836-11	s	METAL, CHIP 18K 5% 1/16W
R208	1-216-834-11	s	METAL, CHIP 12K 5% 1/16W
R209	1-216-836-11	s	METAL, CHIP 18K 5% 1/16W
R210	1-216-835-11	s	METAL, CHIP 15K 5% 1/16W
R211	1-216-835-11	s	METAL, CHIP 15K 5% 1/16W
R212	1-216-835-11	s	METAL, CHIP 15K 5% 1/16W
R213	1-216-671-11	s	METAL, CHIP 6.8K 0.5% 1/10W
R214	1-216-671-11	s	METAL, CHIP 6.8K 0.5% 1/10W
R215	1-216-673-11	s	METAL, CHIP 8.2K 0.5% 1/10W
R216	1-216-673-11	s	METAL, CHIP 8.2K 0.5% 1/10W
R217	1-216-845-11	s	METAL CHIP 100K 5% 1/16W (Up to Serial No. J:10090, UC:20055, EK:50175)
R218	1-216-842-11	s	METAL, CHIP 56K 5% 1/16W
R219	1-216-683-11	s	METAL, CHIP 22K 0.5% 1/10W
RV101	1-228-458-00	s	RES, ADJ, METAL 5K
RV102	1-228-458-00	s	RES, ADJ, METAL 5K
RV103	1-228-461-00	s	RES, ADJ, CERMET 50K
RV104	1-228-461-00	s	RES, ADJ, CERMET 50K
RV105	1-228-460-00	s	RES, ADJ, METAL 20K
RV201	1-228-458-00	s	RES, ADJ, METAL 5K
RV202	1-228-458-00	s	RES, ADJ, METAL 5K
RV203	1-228-461-00	s	RES, ADJ, CERMET 50K
RV204	1-228-461-00	s	RES, ADJ, CERMET 50K
RV205	1-228-460-00	s	RES, ADJ, METAL 20K

NOTE: Please see page E-27 for the parts that are not listed in the parts list.

RM-77 BOARD

Ref. No. or Q'ty	Part No.	SP	Description
1pc	A-7850-820-A	o	COMPLETE PCB, RM-77

(This assembly includes the following parts.)

C5	1-164-004-11	s	CERAMIC, CHIP 0.1uF 10% 25V
C6	1-164-004-11	s	CERAMIC, CHIP 0.1uF 10% 25V
C7	1-164-004-11	s	CERAMIC, CHIP 0.1uF 10% 25V
C8	1-164-004-11	s	CERAMIC, CHIP 0.1uF 10% 25V
C9	1-164-004-11	s	CERAMIC, CHIP 0.1uF 10% 25V
C10	1-164-004-11	s	CERAMIC, CHIP 0.1uF 10% 25V
C11	1-164-004-11	s	CERAMIC, CHIP 0.1uF 10% 25V
C12	1-164-004-11	s	CERAMIC, CHIP 0.1uF 10% 25V
C13	1-164-004-11	s	CERAMIC, CHIP 0.1uF 10% 25V
C14	1-164-004-11	s	CERAMIC, CHIP 0.1uF 10% 25V
CN1	1-562-993-11	o	SOCKET, CONNECTOR 30P
CN2	1-563-335-11	s	CONNECTOR, DIN 48P, FEMALE
CN3	1-506-474-11	s	CONNECTOR, 9P, MALE
CN4	1-506-473-11	s	CONNECTOR, 8P, MALE
CN5	1-506-479-11	s	PIN, CONNECTOR 14P
CN6	1-506-473-11	s	CONNECTOR, 8P, MALE
CN7	1-506-470-11	s	CONNECTOR, 5P, MALE
CN8	1-564-705-11	o	PIN HEADER, STRAIGHT 3P
D1	8-719-911-19	s	DIODE 1SS119
D2	8-719-911-19	s	DIODE 1SS119
IC1	8-759-926-77	s	IC SN74HC541ANS
IC2	8-759-926-77	s	IC SN74HC541ANS
IC3	8-759-926-49	s	IC SN74HC245ANS
IC4	8-759-926-77	s	IC SN74HC541ANS
IC5	8-759-716-71	s	IC 16V8-RM77V1.0
IC6	8-759-151-38	s	IC CXD8141Q
IC7	8-759-151-38	s	IC CXD8141Q
IC8	8-759-207-07	s	IC TD62381P
IC9	8-759-207-07	s	IC TD62381P
L1	1-412-533-11	s	COIL 47uH
RB1	1-231-410-00	s	RESISTOR BLOCK 10Kx8
RB2	1-231-410-00	s	RESISTOR BLOCK 10Kx8
RB3	1-231-410-00	s	RESISTOR BLOCK 10Kx8
RB4	1-231-410-00	s	RESISTOR BLOCK 10Kx8
RB5	1-231-410-00	s	RESISTOR BLOCK 10Kx8
RB6	1-231-410-00	s	RESISTOR BLOCK 10Kx8
RB7	1-231-410-00	s	RESISTOR BLOCK 10Kx8
RB8	1-231-410-00	s	RESISTOR BLOCK 10Kx8
SW1	1-553-977-00	s	SWITCH, SLIDE

SP-13 BOARD (Up to Serial No. J:15150, UC:25080, EK:55110)

Ref. No. or Q'ty	Part No.	SP	Description
1pc	A-7850-805-A	o	COMPLETE PCB, SP-13
(This assembly includes the following parts.)			
1pc	1-639-523-11	o	PC BOARD, DUS-316 (KO-16 BOARD) (Up to Serial No. J:10090, UC:20055, EK:50175)
1pc	1-640-801-11	o	PC BOARD DUS-447
2pcs	2-355-254-01	s	SPACER (A), LCD
3pcs	3-167-943-01	o	CASE (UPPER), SHIELD, SP
3pcs	3-167-944-01	o	CASE (LOWER), SHIELD, SP
3pcs	3-167-945-01	o	CASE (INNER), SHIELD, SP
3pcs	7-682-903-11	s	SCREW +PWH 3X6
C6	1-164-232-11	s	CERAMIC 0.01uF 10% 50VOW
C8	1-164-232-11	s	CERAMIC 0.01uF 10% 50VOW
C10	1-164-232-11	s	CERAMIC 0.01uF 10% 50VOW
C11	1-164-232-11	s	CERAMIC 0.01uF 10% 50VOW
C17	1-164-232-11	s	CERAMIC 0.01uF 10% 50VOW
C19	1-164-232-11	s	CERAMIC 0.01uF 10% 50VOW
C20	1-164-232-11	s	CERAMIC 0.01uF 10% 50VOW
C22	1-164-232-11	s	CERAMIC 0.01uF 10% 50VOW
C25	1-164-232-11	s	CERAMIC 0.01uF 10% 50VOW
C26	1-164-232-11	s	CERAMIC 0.01uF 10% 50VOW
C28	1-164-232-11	s	CERAMIC 0.01uF 10% 50VOW
C29	1-163-251-11	s	CERAMIC 100PF 5% 50VW
C33, 35, 38, 44, 49	1-124-229-00	s	ELECT 33uF 20% 10V (Up to Serial No. J:10070, UC:20035, EK:50115)
	1-124-442-00	s	ELECT 330uF 20% 6.3V (Serial No. J:10071 and higher, UC:20036 and higher, EK:50116 and higher)
C36	1-136-165-00	s	FILM 0.1uF 5% 50V
C37	1-136-165-00	s	FILM 0.1uF 5% 50V
C41	1-164-182-11	s	CERAMIC 0.0033uF 10% 50VW
C47	1-136-163-00	s	FILM 0.068uF 5% 50VW
C48	1-136-163-00	s	FILM 0.068uF 5% 50VW
C53	1-130-471-00	s	MYLAR 0.001uF, 5% 50V
C57	1-102-973-00	s	CERAMIC 100PF 5% 50V
C63	1-164-232-11	s	CERAMIC 0.01uF 10% 50VOW
C64	1-164-232-11	s	CERAMIC 0.01uF 10% 50VOW
C65	1-164-232-11	s	CERAMIC 0.01uF 10% 50VOW
C67	1-164-232-11	s	CERAMIC 0.01uF 10% 50VOW
C68	1-107-204-00	s	MICA 12PF 5% 500V
C69	1-107-157-00	s	MICA 27PF 5% 500V (Up to Serial No. J:15030, UC:25010, EK:55110)
C70	1-107-204-00	s	MICA 12PF 5% 500V
C71	1-107-207-00	s	MICA 16PF 5% 500V
C72	1-107-157-00	s	MICA 27PF 5% 500V (Up to Serial No. J:15030, UC:25010, EK:55110)
C73	1-164-232-11	s	CERAMIC 0.01uF 10% 50VOW
C74	1-107-207-00	s	MICA 16PF 5% 500V
C75	1-164-232-11	s	CERAMIC 0.01uF 10% 50VOW
C77	1-164-232-11	s	CERAMIC 0.01uF 10% 50VOW
C78	1-164-232-11	s	CERAMIC 0.01uF 10% 50VOW
C81	1-164-232-11	s	CERAMIC 0.01uF 10% 50VOW
C82	1-164-232-11	s	CERAMIC 0.01uF 10% 50VOW

(SP-13 BOARD)

Ref. No. or Q'ty	Part No.	SP	Description
C84	1-164-232-11	s	CERAMIC 0.01uF 10% 50VOW
C86	1-164-232-11	s	CERAMIC 0.01uF 10% 50VOW
C88	1-164-232-11	s	CERAMIC 0.01uF 10% 50VOW
C90	1-164-232-11	s	CERAMIC 0.01uF 10% 50VOW
C96	1-102-973-00	s	CERAMIC 100PF 5% 50V
C97	1-130-471-00	s	MYLAR 0.001uF 5% 50V
C99	1-130-481-00	s	MYLAR 0.0068uF 5% 50V
C102	1-136-155-00	s	FILM 0.015uF 5% 50V
C106	1-130-471-00	s	MYLAR 0.001uF 5% 50V
C107	1-164-232-11	s	CERAMIC 0.01uF 10% 50VOW
C113	1-102-973-00	s	CERAMIC 100PF 5% 50V
C114	1-130-471-00	s	MYLAR 0.001uF 5% 50V
C116	1-130-481-00	s	MYLAR 0.0068uF 5% 50V
C119	1-136-155-00	s	PILM 0.015uF 5% 50V
C123	1-130-471-00	s	MYLAR 0.001uF 5% 50V
C124	1-164-232-11	s	CERAMIC 0.01uF 10% 50VOW
C125	1-164-232-11	s	CERAMIC 0.01uF 10% 50VOW
C126	1-164-232-11	s	CERAMIC 0.01uF 10% 50VOW
C128	1-164-232-11	s	CERAMIC 0.01uF 10% 50VOW
C129	1-164-232-11	s	CERAMIC 0.01uF 10% 50VOW
C130	1-164-232-11	s	CERAMIC 0.01uF 10% 50VOW
C131	1-164-232-11	s	CERAMIC 0.01uF 10% 50VOW
C133	1-164-232-11	s	CERAMIC 0.01uF 10% 50VOW
C134	1-164-232-11	s	CERAMIC 0.01uF 10% 50VOW
C135	1-164-232-11	s	CERAMIC 0.01uF 10% 50VOW
C136	1-164-232-11	s	CERAMIC 0.01uF 10% 50VOW
C137	1-164-232-11	s	CERAMIC 0.01uF 10% 50VOW
C138	1-164-232-11	s	CERAMIC 0.01uF 10% 50VOW
C139	1-164-232-11	s	CERAMIC 0.01uF 10% 50VOW
C140	1-164-232-11	s	CERAMIC 0.01uF 10% 50VOW
C141	1-164-232-11	s	CERAMIC 0.01uF 10% 50VOW
C142	1-164-232-11	s	CERAMIC 0.01uF 10% 50VOW
C143	1-164-232-11	s	CERAMIC 0.01uF 10% 50VOW
C145	1-164-232-11	s	CERAMIC 0.01uF 10% 50VOW
C147	1-164-232-11	s	CERAMIC 0.01uF 10% 50VOW
C200	1-164-232-11	s	CERAMIC 0.01uF 10% 50VOW
C300	1-126-153-11	s	ELECT 22uF 20% 6.3V (Serial No. J:10071 and higher, UC:20036 and higher, EK:50116 and higher)
C400, 401	1-124-604-00	s	ELECT 330uF 20% 10V (Serial No. J:10071 and higher, UC:20036 and higher, EK:50116 and higher)
C500	1-164-232-11	s	CERAMIC 0.01uF 10% 50VOW
CN1	1-506-475-11	o	CONNECTOR, 10P, MALE
CN2	1-564-069-41	o	PIN CONNECTOR 14P
CN3	1-506-478-11	s	CONNECTOR, 13P, MALE
CN4	1-506-468-11	s	CONNECTOR, 3P, MALE
CN5	1-564-708-11	o	PIN HEADER, STRAIGHT 6P
CN6	1-506-477-11	s	CONNECTOR, 12P, MALE
CN7	1-506-472-11	s	CONNECTOR, 7P, MALE
CN8	1-562-708-11	o	CONNECTOR, FPC 13P, FEMALE
CN9	1-562-883-11	o	CONNECTOR, FPC 20P, FEMALE
CN10	1-562-883-11	o	CONNECTOR, FPC 20P, FEMALE
CN11	1-506-478-11	s	CONNECTOR, 13P, MALE
CN12	1-506-478-11	s	CONNECTOR, 13P, MALE
CT1, 2	1-141-227-00	s	CERAMIC TRIMMER (Serial No. J:15031 and higher,

NOTE: Please see page E-27 for the parts that are not listed in the parts list.

(SP-13 BOARD)

Ref. No. or Q'ty	Part No.	SP	Description
	UC:25011 and higher, EK:55111 and higher)		
D1	8-719-800-26	s	DIODE TLUG164
D2	8-719-800-26	s	DIODE TLUG164
D3	8-719-800-56	s	DIODE TLUR164
D4	8-719-938-68	s	DIODE GL3HY8
D5	8-719-907-19	s	DIODE, VARICAP FC52M-5
D6	8-719-915-30	s	DIODE, VARICAP FC53M
D7	8-719-915-30	s	DIODE, VARICAP FC53M
D8	8-719-911-19	s	DIODE 1SS119
D9	8-719-911-19	s	DIODE 1SS119
D10	8-719-915-30	s	DIODE, VARICAP FC53M
D11	8-719-911-19	s	DIODE 1SS119
D12	8-719-911-19	s	DIODE 1SS119
FB1	1-543-256-11	s	BEAD, FERRITE
FB2	1-543-256-11	s	BEAD, FERRITE
FB3	1-543-256-11	s	BEAD, FERRITE
FB4	1-543-256-11	s	BEAD, FERRITE
FB5	1-543-256-11	s	BEAD, FERRITE
FB6	1-543-256-11	s	BEAD, FERRITE
FB7	1-543-256-11	s	BEAD, FERRITE
FB8	1-543-256-11	s	BEAD, EERRITE
EB9	1-543-256-11	s	BEAD, FERRITE
FB10	1-543-256-11	s	BEAD, FERRITE
FB11	1-543-256-11	s	BEAD, FERRITE
FB12	1-543-256-11	s	BEAD, FERRITE
FB13	1-543-256-11	s	BEAD, FERRITE
FB14	1-543-256-11	s	BEAD, FERRITE
FB15	1-543-256-11	s	BEAD, FERRITE
FB16	1-543-256-11	s	BEAD, FERRITE
FB17	1-543-256-11	s	BEAD, FERRITE
FB18	1-543-256-11	s	BEAD, FERRITE
FB19	1-543-256-11	s	BEAD, FERRITE
FB20	1-543-256-11	s	BEAD, FERRITE
FB21	1-543-256-11	s	BEAD, FERRITE
FB22	1-543-256-11	s	BEAD, FERRITE
FB23	1-543-256-11	s	BEAD, EERRITE
FB24	1-543-256-11	s	BEAD, FERRITE
FB25	1-543-256-11	s	BEAD, FERRITE
FB26	1-543-256-11	s	BEAD, FERRITE
FB27	1-543-256-11	s	BEAD, FERRITE
FB28	1-543-256-11	s	BEAD, FERRITE
FB29	1-543-256-11	s	BEAD, FERRITE
FB30	1-543-256-11	s	BEAD, FERRITE
FB31	1-543-256-11	s	BEAD, FERRITE
FB32	1-543-256-11	s	BEAD, FERRITE
FB600, 601	1-535-178-00	s	BEAD, FERRITE (Up to Serial No. J:10070, UC:20035, EK:50115)
ICB2	8-759-926-77	s	IC SN74HC541ANS
ICB4	8-759-926-77	s	IC SN74HC541ANS
ICB8	8-759-926-76	s	IC SN74HC540ANS
ICB9	8-759-926-05	s	IC SN74HC125ANS
ICC3	8-759-152-36	s	IC CXD8185AQ
ICC5	8-759-926-05	s	IC SN74HC125ANS
ICC6	8-759-926-77	s	IC SN74HC541ANS
ICC9	8-759-933-84	s	IC CXD1008Q
ICD3	8-759-152-05	s	IC CXD8184AQ

(SP-13 BOARD)

Ref. No. or Q'ty	Part No.	SP	Description
ICD5	8-759-008-52	s	IC MC74HC123AF
ICD7	8-752-337-79	s	IC CXR58257AM-10LL
ICD9	8-759-933-85	s	IC CXD1009Q
ICE10	8-759-239-23	s	IC TC74HC86AF (Serial No. J:10091 and higher, UC:20056 and higher, EK:50176 and higher)
ICF1	8-759-926-77	s	IC SN74HC541ANS
ICF2	8-759-926-05	s	IC SN74HC125ANS
ICF3	8-759-927-29	s	IC SN74HCU04ANS
ICF4	8-759-926-77	s	IC SN74HC541ANS
ICF5	8-759-239-23	s	IC TC74HC86AF
ICF6	8-759-044-72	s	IC CXD8319M
ICF9	8-759-970-59	s	IC TLC272CPS
ICG3	8-759-030-59	s	IC MC1648P-1
ICG7	8-759-239-23	s	IC TC74HC86AF (Up to Serial No. J:10090, UC:20055, EK:50175)
ICG9	8-759-970-59	s	IC TLC272CPS
ICG10	8-759-926-77	s	IC SN74HC541ANS
ICH2	8-759-040-44	s	IC MC4044P
ICH9	8-759-933-84	s	IC CXD1008Q
ICH10	8-759-926-05	s	IC SN74HC125ANS
ICH6A	8-759-230-98	s	IC TC74HC4052AF
ICH6B	8-759-230-98	s	IC TC74HC4052AF
ICJ2	8-759-927-29	s	IC SN74HCU04ANS
ICJ3	8-752-306-51	s	IC CX23065
ICJ5	8-759-231-93	s	IC TC74HC4051AF
ICJ6	8-759-231-93	s	IC TC74HC4051AF
ICJ7	8-752-337-79	s	IC CXK58257AM-10LL
ICJ9	8-759-933-85	s	IC CXD1009Q
ICK2	8-759-970-59	s	IC TLC272CPS
ICK5	8-759-983-69	s	IC LM358PS
ICL2	8-759-925-74	s	IC SN74HC04ANS
ICL3	8-759-925-85	s	IC SN74HC32ANS
ICL5	8-759-926-77	s	IC SN74HC541ANS
ICL6	8-759-926-77	s	IC SN74HC541ANS
ICL9	8-759-970-59	s	IC TLC272CPS
ICM2	8-759-927-46	s	IC SN74HC00ANS
ICM3A	8-759-927-46	s	IC SN74HC00ANS
ICM3B	8-759-927-46	s	IC SN74HC00ANS
ICM8	8-759-511-14	s	IC TLC274CNS
ICM9A	8-759-970-59	s	IC TLC272CPS
ICM9B	8-759-511-14	s	IC TLC274CNS
J1	1-564-947-11	s	CONNECTOR, 2P, MALE
J2	1-564-947-11	s	CONNECTOR, 2P, MALE
L1	1-412-533-11	s	COIL 47uH
L2	1-412-533-11	s	COIL 47uH
L3 to 5	1-459-155-00	s	COIL 45uH (Up to Serial No. J:10070, UC:20035, EK:50115)
	1-410-482-31	s	COIL 100uH (Serial No. J:10071 and higher, UC:20036 and higher, EK:50116 and higher)
L6,8	1-408-429-00	s	COIL 470uH

NOTE: Please see page E-27 for the parts that are not listed in the parts list.

(SP-13 BOARD)

Ref. No. or Q'ty	Part No.	SP	Description
	(Serial No. J:10071 and higher, UC:20036 and higher, EK:50116 and higher)		
L7	1-426-259-11	s	COIL, RF
L9 to 16	1-459-155-00	s	COIL 45uH (Up to Serial No. J:10070, UC:20035, EK:50115)
	1-410-482-31	s	COIL 100uH (Serial No. J:10071 and higher, UC:20036 and higher, EK:50116 and higher)
LV1	1-406-406-11	s	COIL (OSC)
LV2	1-406-406-11	s	COIL (OSC)
LV3	1-406-406-11	s	COIL (OSC)
Q1	8-729-385-52	s	TRANSISTOR 2SC2855-E
R51	1-216-056-00	s	METAL 2K 5% 1/10W
R53	1-216-067-00	s	METAL, CHIP 5.6K 5% 1/10W
R506	1-216-079-00	s	METAL, CHIP 18K 5% 1/10W
R514	1-216-079-00	s	METAL, CHIP 18K 5% 1/10W
R608	1-249-408-11	s	CARBON 180 5% 1/4W
	(Up to Serial No. J:10050, UC:20025, EK:50065)		
R700	1-249-397-11	s	CARBON 22 5% 1/4W (Up to Serial No. J:10050, UC:20025, EK:50065)
R701	1-249-403-11	s	CARBON 68 5% 1/4W (Up to Serial No. J:10050, UC:20025, EK:50065)
R702	1-249-403-11	s	CARBON 68 5% 1/4W (Up to Serial No. J:10070, UC:20035, EK:50115)
	1-216-033-00	s	CHIP 220 5% 1/10W (Serial No. J:10071 and higher, UC:20036 and higher, EK:50116 and higher)
R800	1-249-417-11	s	CARBON 1K 5% 1/4W (Serial No. J:10031 to 10090, UC:20016 to 20055, EK:50036 to 50175)
R801	1-249-417-11	s	CARBON 1K 5% 1/4W (Serial No. J:10031 to 10090, UC:20016 to 20055, EK:50036 to 50175)
RB1	1-231-533-00	s	RESISTOR BLOCK 10Kx4
RB2	1-231-533-00	s	RESISTOR BLOCK 10Kx4
RB3	1-231-410-00	s	RESISTOR BLOCK 10Kx8
RB4	1-231-410-00	s	RESISTOR BLOCK 10Kx8
RB6	1-231-410-00	s	RESISTOR BLOCK 10Kx8
RB7	1-231-533-00	s	RESISTOR BLOCK 10Kx4
RB8	1-231-410-00	s	RESISTOR BLOCK 10Kx8
RB9	1-231-533-00	s	RESISTOR BLOCK 10Kx4
RV1	1-237-518-21	s	RES, ADJ, METAL 10K
RV2	1-237-516-21	s	RES, ADJ, METAL 2K
RV3	1-237-520-21	s	RES, ADJ, METAL 50K
RV4	1-237-516-21	s	RES, ADJ, METAL 2K
RV5	1-237-520-21	s	RES, ADJ, METAL 50K

(SP-13 BOARD)

Ref. No. or Q'ty	Part No.	SP	Description
RV6	1-237-516-21	s	RES, ADJ, METAL 2K
X1	1-567-698-11	s	OSCILLATOR, CRYSTAL
X2	1-579-219-11	s	OSCILLATOR, CRYSTAL

NOTE: Please see page E-27 for the parts that are not listed in the parts list.

SP-13 BOARD (Serial No. J:15151 and higher,
UC:25081 and higher, EK:55111 and higher)

Ref.No. or Q'ty	Part No.	SP	Description
1pc	A-7850-805-A	o	COMPLETE PCB, SP-13
(This assembly includes the following parts.)			
3pcs	3-167-945-02	o	CASE (INNER), SHIELD, SP
3pcs	3-167-944-02	o	CASE (LOWER), SHIELD, SP
3pcs	4-925-756-21	o	HOLDER, LED
2pcs	2-355-254-01	s	SPACER (A), LCD
3pcs	3-167-943-01	o	CASE (UPPER), SHIELD, SP
1pc	4-925-756-21	o	HOLDER, LED
C1	1-124-442-00	s	ELECT 330uF 20% 6.3V
C2	1-124-442-00	s	ELECT 330uF 20% 6.3V
C3	1-124-442-00	s	ELECT 330uF 20% 6.3V
C4	1-124-442-00	s	ELECT 330uF 20% 6.3V
C6	1-164-232-11	s	CERAMIC 0.01uF 10% 100V
C7	1-124-442-00	s	ELECT 330uF 20% 6.3V
C8	1-164-232-11	s	CERAMIC 0.01uF 10% 100V
C9	1-124-442-00	s	ELECT 330uF 20% 6.3V
C10	1-164-232-11	s	CERAMIC 0.01uF 10% 100V
C11	1-164-232-11	s	CERAMIC 0.01uF 10% 100V
C12	1-124-442-00	s	ELECT 330uF 20% 6.3V
C17	1-164-232-11	s	CERAMIC 0.01uF 10% 100V
C18	1-124-442-00	s	ELECT 330uF 20% 6.3V
C19	1-164-232-11	s	CERAMIC 0.01uF 10% 100V
C20	1-164-232-11	s	CERAMIC 0.01uF 10% 100V
C21	1-124-442-00	s	ELECT 330uF 20% 6.3V
C22	1-164-232-11	s	CERAMIC 0.01uF 10% 100V
C23	1-124-442-00	s	ELECT 330uF 20% 6.3V
C24	1-124-442-00	s	ELECT 330uF 20% 6.3V
C25	1-164-232-11	s	CERAMIC 0.01uF 10% 100V
C26	1-164-232-11	s	CERAMIC 0.01uF 10% 100V
C27	1-124-442-00	s	ELECT 330uF 20% 6.3V
C28	1-164-232-11	s	CERAMIC 0.01uF 10% 100V
C29	1-163-251-11	s	CERAMIC, CHIP 100PF 5% 50V
C33	1-124-442-00	s	ELECT 330uF 20% 6.3V
C35	1-124-442-00	s	ELECT 330uF 20% 6.3V
C36	1-136-165-00	s	FILM 0.1uF 5% 50V
C37	1-136-165-00	s	FILM 0.1uF 5% 50V
C38	1-124-442-00	s	ELECT 330uF 20% 6.3V
C39	1-124-442-00	s	ELECT 330uF 20% 6.3V
C41	1-164-182-11	s	CERAMIC CHIP 3300PF 10% 100V
C44	1-124-442-00	s	ELECT 330uF 20% 6.3V
C47	1-136-163-00	s	MYLAR 0.068uF 10% 50V
C48	1-136-163-00	s	MYLAR 0.068uF 10% 50V
C49	1-124-442-00	s	ELECT 330uF 20% 6.3V
C53	1-130-471-00	s	MYLAR 0.001uF 5% 50V
C57	1-102-973-00	s	CERAMIC 100PF 5% 50V
C58	1-124-442-00	s	ELECT 330uF 20% 6.3V
C63	1-164-232-11	s	CERAMIC 0.01uF 10% 100V
C64	1-164-232-11	s	CERAMIC 0.01uF 10% 100V
C65	1-164-232-11	s	CERAMIC 0.01uF 10% 100V
C66	1-124-442-00	s	ELECT 330uF 20% 6.3V
C67	1-164-232-11	s	CERAMIC 0.01uF 10% 100V
C68	1-107-204-00	s	MICA 12PF 5% 500V
C70	1-107-204-00	s	MICA 12PF 5% 500V
C71	1-107-207-00	s	MICA 16PF 5% 500V
C73	1-164-232-11	s	CERAMIC 0.01uF 10% 100V
C74	1-107-207-00	s	MICA 16PF 5% 500V
C75	1-164-232-11	s	CERAMIC 0.01uF 10% 100V
C76	1-124-442-00	s	ELECT 330uF 20% 6.3V

(SP-13 BOARD)

Ref.No. or Q'ty	Part No.	SP	Description
C77	1-164-232-11	s	CERAMIC 0.01uF 10% 100V
C78	1-164-232-11	s	CERAMIC 0.01uF 10% 100V
C79	1-124-442-00	s	ELECT 330uF 20% 6.3V
C80	1-124-442-00	s	ELECT 330uF 20% 6.3V
C81	1-164-232-11	s	CERAMIC 0.01uF 10% 100V
C82	1-164-232-11	s	CERAMIC 0.01uF 10% 100V
C83	1-124-442-00	s	ELECT 330uF 20% 6.3V
C84	1-164-232-11	s	CERAMIC 0.01uF 10% 100V
C85	1-124-442-00	s	ELECT 330uF 20% 6.3V
C86	1-164-232-11	s	CERAMIC 0.01uF 10% 100V
C87	1-124-442-00	s	ELECT 330uF 20% 6.3V
C88	1-164-232-11	s	CERAMIC 0.01uF 10% 100V
C89	1-124-442-00	s	ELECT 330uF 20% 6.3V
C90	1-164-232-11	s	CERAMIC 0.01uF 10% 100V
C91	1-124-442-00	s	ELECT 330uF 20% 6.3V
C92	1-124-442-00	s	ELECT 330uF 20% 6.3V
C93	1-124-442-00	s	ELECT 330uF 20% 6.3V
C94	1-124-442-00	s	ELECT 330uF 20% 6.3V
C96	1-102-973-00	s	CERAMIC 100PF 5% 50V
C97	1-130-471-00	s	MYLAR 0.001uF 5% 50V
C98	1-124-442-00	s	ELECT 330uF 20% 6.3V
C99	1-130-481-00	s	MYLAR 0.0068uF 5% 50V
C102	1-136-155-00	s	FILM 0.015uF 5% 50V
C106	1-130-471-00	s	MYLAR 0.001uF 5% 50V
C107	1-164-232-11	s	CERAMIC 0.01uF 10% 100V
C108	1-124-442-00	s	ELECT 330uF 20% 6.3V
C109	1-124-442-00	s	ELECT 330uF 20% 6.3V
C110	1-124-442-00	s	ELECT 330uF 20% 6.3V
C111	1-124-442-00	s	ELECT 330uF 20% 6.3V
C113	1-102-973-00	s	CERAMIC 100PF 5% 50V
C114	1-130-471-00	s	MYLAR 0.001uF 5% 50V
C115	1-124-442-00	s	ELECT 330uF 20% 6.3V
C116	1-130-481-00	s	MYLAR 0.0068uF 5% 50V
C119	1-136-155-00	s	FILM 0.015uF 5% 50V
C123	1-130-471-00	s	MYLAR 0.001uF 5% 50V
C124	1-164-232-11	s	CERAMIC 0.01uF 10% 100V
C125	1-164-232-11	s	CERAMIC 0.01uF 10% 100V
C126	1-164-232-11	s	CERAMIC 0.01uF 10% 100V
C128	1-164-232-11	s	CERAMIC 0.01uF 10% 100V
C129	1-164-232-11	s	CERAMIC 0.01uF 10% 100V
C130	1-164-232-11	s	CERAMIC 0.01uF 10% 100V
C131	1-164-232-11	s	CERAMIC 0.01uF 10% 100V
C133	1-164-232-11	s	CERAMIC 0.01uF 10% 100V
C134	1-164-232-11	s	CERAMIC 0.01uF 10% 100V
C135	1-164-232-11	s	CERAMIC 0.01uF 10% 100V
C136	1-164-232-11	s	CERAMIC 0.01uF 10% 100V
C137	1-164-232-11	s	CERAMIC 0.01uF 10% 100V
C138	1-164-232-11	s	CERAMIC 0.01uF 10% 100V
C139	1-164-232-11	s	CERAMIC 0.01uF 10% 100V
C140	1-164-232-11	s	CERAMIC 0.01uF 10% 100V
C141	1-164-232-11	s	CERAMIC 0.01uF 10% 100V
C142	1-164-232-11	s	CERAMIC 0.01uF 10% 100V
C143	1-164-232-11	s	CERAMIC 0.01uF 10% 100V
C144	1-124-442-00	s	ELECT 330uF 20% 6.3V
C145	1-164-232-11	s	CERAMIC 0.01uF 10% 100V
C146	1-124-442-00	s	ELECT 330uF 20% 6.3V
C147	1-164-232-11	s	CERAMIC 0.01uF 10% 100V
C148	1-124-442-00	s	ELECT 330uF 20% 6.3V
C200	1-164-232-11	s	CERAMIC 0.01uF 10% 100V

NOTE: Please see page E-27 for the parts that are not listed in the parts list.

(SP-13 BOARD)

Ref. No. or Q'ty	Part No.	SP	Description
C300	1-126-153-11	s	ELECT 22uF 20% 6.3V
C500	1-164-232-11	s	CERAMIC 0.01uF 10% 100V
C505	1-164-232-11	s	CERAMIC 0.01uF 10% 100V
CN1	1-506-475-11	o	CONNECTOR, 10P, MALE
CN2	1-564-069-41	o	PIN, CONNECTOR 14P
CN3	1-506-478-11	s	CONNECTOR, 13P, MALE
CN4	1-506-468-11	s	CONNECTOR, 3P, MALE
CN5	1-564-708-11	o	PIN HEADER, STRAIGHT 6P
CN6	1-506-477-11	s	CONNECTOR, 12P, MALE
CN7	1-506-472-11	s	CONNECTOR, 7P, MALE
CN8	1-562-708-11	o	CONNECTOR, FPC 13P, FEMALE
CN9	1-562-883-11	o	CONNECTOR, FPC 20P, FEMALE
CN10	1-562-883-11	o	CONNECTOR, FPC 20P, FEMALE
CN11	1-506-478-11	s	CONNECTOR, 13P, MALE
CN12	1-506-478-11	s	CONNECTOR, 13P, MALE
CT1	1-141-227-00	s	CAP, TRIMMER 20PF
CT2	1-141-227-00	s	CAP, TRIMMER 20PF
D1	8-719-800-26	s	DIODE TLUG164
D2	8-719-800-26	s	DIODE TLUG164
D3	8-719-800-56	s	LED TLUR164, RED
D4	8-719-938-68	s	DIODE GL3HY8
D5	8-719-907-19	s	DIODE, VARICAP FC52M-5
D6	8-719-915-30	s	DIODE, VARICAP FC53M
D7	8-719-915-30	s	DIODE, VARICAP FC53M
D8	8-719-911-19	s	DIODE 1SS119
D9	8-719-911-19	s	DIODE 1SS119
D10	8-719-915-30	s	DIODE, VARICAP FC53M
D11	8-719-911-19	s	DIODE 1SS119
D12	8-719-911-19	s	DIODE 1SS119
D101	8-719-911-19	s	DIODE 1SS119
D102	8-719-911-19	s	DIODE 1SS119
FB1	1-543-256-11	s	BEAD, FERRITE
FB2	1-543-256-11	s	BEAD, FERRITE
FB3	1-543-256-11	s	BEAD, FERRITE
FB4	1-543-256-11	s	BEAD, FERRITE
FB5	1-543-256-11	s	BEAD, FERRITE
FB6	1-543-256-11	s	BEAD, FERRITE
FB7	1-543-256-11	s	BEAD, FERRITE
FB8	1-543-256-11	s	BEAD, FERRITE
FB9	1-543-256-11	s	BEAD, FERRITE
FB10	1-543-256-11	s	BEAD, FERRITE
FB11	1-543-256-11	s	BEAD, FERRITE
FB12	1-543-256-11	s	BEAD, FERRITE
FB13	1-543-256-11	s	BEAD, FERRITE
FB14	1-543-256-11	s	BEAD, FERRITE
FB15	1-543-256-11	s	BEAD, FERRITE
FB16	1-543-256-11	s	BEAD, FERRITE
FB17	1-543-256-11	s	BEAD, FERRITE
FB18	1-543-256-11	s	BEAD, FERRITE
FB19	1-543-256-11	s	BEAD, FERRITE
FB20	1-543-256-11	s	BEAD, FERRITE
FB21	1-543-256-11	s	BEAD, FERRITE
FB22	1-543-256-11	s	BEAD, FERRITE
FB23	1-543-256-11	s	BEAD, FERRITE
FB24	1-543-256-11	s	BEAD, FERRITE
FB25	1-543-256-11	s	BEAD, FERRITE
FB26	1-543-256-11	s	BEAD, FERRITE

(SP-13 BOARD)

Ref. No. or Q'ty	Part No.	SP	Description
FB27	1-543-256-11	s	BEAD, FERRITE
FB28	1-543-256-11	s	BEAD, FERRITE
FB29	1-543-256-11	s	BEAD, FERRITE
FB30	1-543-256-11	s	BEAD, FERRITE
FB31	1-543-256-11	s	BEAD, FERRITE
FB32	1-543-256-11	s	BEAD, FERRITE
ICB2	8-759-926-77	s	IC SN74HC541NS
ICB4	8-759-926-77	s	IC SN74HC541NS
ICB8	8-759-926-76	s	IC SN74HC540ANS
ICB9	8-759-926-05	s	IC SN74HC125ANS
ICC3	8-759-152-36	s	IC CXD8185AQ
ICC5	8-759-926-05	s	IC SN74HC125ANS
ICC6	8-759-926-77	s	IC SN74HC541NS
ICC9	8-759-933-84	s	IC CXD1008Q
ICD3	8-759-152-05	s	IC CXD8184AQ
ICD5	8-759-239-55	s	IC MC74HC123AF
ICD7	8-759-507-85	s	IC MS62256CLL-10FC
ICD9	8-759-933-85	s	IC CXD1009Q
ICF1	8-759-926-77	s	IC SN74HC541NS
ICF2	8-759-926-05	s	IC SN74HC125ANS
ICF3	8-759-927-29	s	IC SN74HCU04NS
ICF4	8-759-926-77	s	IC SN74HC541NS
ICF5	8-759-239-23	s	IC TC74HC86AP
ICF9	8-759-970-59	s	IC TLC272CPS
ICG3	8-759-030-59	s	IC MC1648P-1
ICG9	8-759-970-59	s	IC TLC272CPS
ICG10	8-759-926-77	s	IC SN74HC541NS
ICH2	8-759-040-44	s	IC MC4044P
ICH9	8-759-933-84	s	IC CXD1008Q
ICH10	8-759-926-05	s	IC SN74HC125ANS
ICH6A	8-759-230-98	s	IC TC74HC4052AF
ICH6B	8-759-230-98	s	IC TC74HC4052AF
ICJ2	8-759-927-29	s	IC SN74HCU04NS
ICJ3	8-752-306-51	s	IC CX23065A
ICJ5	8-759-231-93	s	IC TC74HC4051AF
ICJ6	8-759-231-93	s	IC TC74HC4051AF
ICJ7	8-759-507-85	s	IC MS62256CLL-10FC
ICJ9	8-759-933-85	s	IC CXD1009Q
ICK2	8-759-970-59	s	IC TLC272CPS
ICK5	8-759-983-69	s	IC LM358PS
ICK10	8-759-044-72	s	IC CXD8319M
ICL2	8-759-925-74	s	IC TC74HC04NS
ICL3	8-759-925-85	s	IC SN74HC32NS
ICL5	8-759-926-77	s	IC SN74HC541NS
ICL6	8-759-926-77	s	IC SN74HC541NS
ICL9	8-759-970-59	s	IC TLC272CPS
ICM2	8-759-927-46	s	IC SN74HC00NS
ICM8	8-759-511-14	s	IC TLC274CNS
ICM3A	8-759-927-46	s	IC SN74HC00NS
ICM3B	8-759-927-46	s	IC SN74HC00NS
ICM9A	8-759-970-59	s	IC TLC272CPS
ICM9B	8-759-511-14	s	IC TLC274CNS
J1	1-564-947-11	s	CONNECTOR, 2P, MALE
J2	1-564-947-11	s	CONNECTOR, 2P, MALE

NOTE: Please see page E-27 for the parts that are not listed in the parts list.

(SP-13 BOARD)

Ref. No. or Q'ty	Part No.	SP	Description
L1	1-412-533-11	s	INDDCTOR 47UH
L2	1-412-533-11	s	INDUCTOR 47UH
L3	1-410-482-31	s	INDUCTOR 100uH
L4	1-410-482-31	s	INDUCTOR 100uH
L5	1-410-482-31	s	INDUCTOR 100uH
L6	1-408-429-00	s	INDUCTOR 470uH
L7	1-426-259-11	s	COIL, RP
L8	1-408-429-00	s	INDUCTOR 470uH
L9	1-410-482-31	s	INDUCTOR 100uH
L10	1-410-482-31	s	INDUCTOR 100uH
L11	1-410-482-31	s	INDUCTOR 100uH
L12	1-410-482-31	s	INDUCTOR 100uH
L13	1-410-482-31	s	INDUCTOR 100uH
L14	1-410-482-31	s	INDUCTOR 100uH
L15	1-410-482-31	s	INDUCTOR 100uH
L16	1-410-482-31	s	INDUCTOR 100uH
LV1	1-406-406-11	s	COIL (OSC)
LV2	1-406-406-11	s	COIL (OSC)
LV3	1-406-406-11	s	COIL (OSC)
Q1	8-729-385-52	s	TRANSISTOR 2SC2855-E
Q2	8-729-900-74	s	TRANSISTOR DTC143TS (Serial No. J:15271 and higher, UC:25116 and higher, EK:55121 and higer
R51	1-216-056-00	s	METAL, CHIP 2K 5% 1/10W
R53	1-216-067-00	s	METAL, CHIP 5.6K 5% 1/10W
R505	1-216-047-00	s	METAL, CNIP 820 5% 1/10W
R506	1-216-079-00	s	METAL, CHIP 18K 5% 1/10W
RB1	1-231-533-00	s	RESISTOR BLOCK 10Kx4
RB2	1-231-533-00	s	RESISTOR BLOCK 10Kx4
RB3	1-231-410-00	s	RESISTOR BLOCK 10Kx8
RB4	1-231-410-00	s	RESISTOR BLOCK 10Kx8
RB6	1-231-410-00	s	RESISTOR BLOCK 10Kx8
RB7	1-231-533-00	s	RESISTOR BLOCK 10Kx4
RB8	1-231-410-00	s	RESISTOR BLOCK 10Kx8
RB9	1-231-533-00	s	RESISTOR BLOCK 10Kx4
RV1	1-237-518-21	s	RES, ADJ, METAL 10K
RV2	1-237-516-21	s	RES, ADJ, METAL 2K
RV3	1-237-520-21	s	RES, ADJ, METAL 50K
RV4	1-237-516-21	s	RES, ADJ, METAL 2K
RV5	1-237-520-21	s	RES, ADJ, METAL 50K
RV6	1-237-516-21	s	RES, ADJ, METAL 2K
X1	1-567-698-11	s	OSCILLATOR, CRYSTAL
X2	1-579-219-11	s	OSCILLATOR, CRYSTAL

SP-17C BOARD

Ref. No. or Q'ty	Part No.	SP	Description
1pc	A-7850-892-A	o	COMPLETE PCB, SP-17C
(This assembly includes the following parts.)			
2pcs	7-621-284-30	s	SCREW +P 2.6X8
2pcs	7-622-207-05	s	N 2.6, TYPE 2
C3	1-126-177-11	s	ELECT 100uF 20% 10V
CN1	1-506-750-11	o	CONNECTOR, DIN 48P, MALE
D1	8-719-938-68	s	DIODE GL3HY8
D2	8-719-800-26	s	DIODE TLUG164
D3	8-719-800-26	s	DIODE TLUG164
D4	8-719-800-56	s	LED TLUR164, RED
IC1	8-759-152-60	s	IC CXD8163AQ
IC10	8-752-331-87	s	IC CXD1160AP
L1	1-412-533-11	s	COIL 47uH

NOTE: Please see page E-27 for the parts that are not listed in the parts list.

SV-123 BOARD

Ref. No. or Q'ty	Part No.	SP	Description
1pc	A-7850-813-A	o	COMPLETE PCB, SV-123
(This assembly includes the following parts.)			
2pcs	7-682-903-11	s	SCREW +PWH 3X6
C101	1-162-201-31	s	CERAMIC 12PF 5% 50V
C102	1-162-201-31	s	CERAMIC 12PF 5% 50V
C103	1-164-232-11	s	CERAMIC 0.01uF 10% 50VOW
C105	1-164-232-11	s	CERAMIC 0.01uF 10% 50VOW
C106	1-126-157-11	s	ELECT 10uF 20% 16V
C107	1-164-232-11	s	CERAMIC 0.01uF 10% 50VOW
C109	1-136-160-00	s	FILM 0.039uF 5% 50VOW
C110	1-136-169-00	s	MYLAR 0.22uF 5% 50V
C111	1-136-172-00	s	FILM 0.39uF 5% 50VOW
C112	1-164-232-11	s	CERAMIC 0.01uF 10% 50VOW
C113	1-136-153-00	s	FILM 0.01uF 5% 50V
C114	1-126-157-11	s	ELECT 10uF 20% 16V
C115	1-164-232-11	s	CERAMIC 0.01uF 10% 50VOW
C116	1-126-157-11	s	ELECT 10uF 20% 16V
C117	1-136-153-00	s	FILM 0.01uF 5% 50V
C118	1-136-158-00	s	FILM 0.027uF 5% 50VOW
C119	1-130-473-00	s	MYLAR 0.0015uF 5% 50V
C120	1-164-232-11	s	CERAMIC 0.01uF 10% 50VOW
C122	1-126-157-11	s	ELECT 10uF 20% 16V
C124	1-164-232-11	s	CERAMIC 0.01uF 10% 50VOW
C125	1-164-232-11	s	CERAMIC 0.01uF 10% 50VOW
C127	1-163-017-00	s	CERAMIC, CHIP 0.0047uF 5% 50V
C128	1-164-232-11	s	CERAMIC 0.01uF 10% 50VOW
C133	1-136-153-00	s	FILM 0.01uF 5% 50V
C134	1-136-153-00	s	FILM 0.01uF 5% 50V
C136	1-126-157-11	s	ELECT 10uF 20% 16V
C138	1-164-232-11	s	CERAMIC 0.01uF 10% 50VOW
C141	1-136-153-00	s	FILM 0.01uF 5% 50V
C142	1-136-153-00	s	FILM 0.01uF 5% 50V
C143	1-136-153-00	s	FILM 0.01uF 5% 50V
C144	1-136-158-00	s	FILM 0.027uF 5% 50VOW
C145	1-130-473-00	s	MYLAR 0.0015uF 5% 50V
C146	1-164-232-11	s	CERAMIC 0.01uF 10% 50VOW
C147	1-136-153-00	s	FILM 0.01uF 5% 50V
C148	1-136-158-00	s	FILM 0.027uF 5% 50VOW
C149	1-130-473-00	s	MYLAR 0.0015uF 5% 50V
C150	1-136-153-00	s	FILM 0.01uF 5% 50V
C151	1-136-154-00	s	FILM 0.012uF 5% 50VOW
C152	1-136-159-00	s	FILM 0.033uF 5% 50V
C153	1-164-232-11	s	CERAMIC 0.01uF 10% 50VOW
C154	1-136-153-00	s	FILM 0.01uF 5% 50V
C155	1-136-154-00	s	FILM 0.012uF 5% 50VOW
C156	1-136-159-00	s	FILM 0.033uF 5% 50V
C158	1-164-232-11	s	CERAMIC 0.01uF 10% 50VOW
C159	1-164-232-11	s	CERAMIC 0.01uF 10% 50VOW
C160	1-164-232-11	s	CERAMIC 0.01uF 10% 50VOW
C161	1-164-232-11	s	CERAMIC 0.01uF 10% 50VOW
C162	1-164-232-11	s	CERAMIC 0.01uF 10% 50VOW
C163	1-164-232-11	s	CERAMIC 0.01uF 10% 50VOW
C164	1-164-232-11	s	CERAMIC 0.01uF 10% 50VOW
C165	1-164-232-11	s	CERAMIC 0.01uF 10% 50VOW
C166	1-164-232-11	s	CERAMIC 0.01uF 10% 50VOW
C167	1-164-232-11	s	CERAMIC 0.01uF 10% 50VOW

(SV-123 BOARD)

Ref. No. or Q'ty	Part No.	SP	Description
C168	1-164-232-11	s	CERAMIC 0.01uF 10% 50VOW
C169	1-164-232-11	s	CERAMIC 0.01uF 10% 50VOW
CN101	1-565-189-11	s	CONNECTOR, FPC 36P
CN102	1-506-477-11	s	CONNECTOR, 12P, MALE
CN103	1-506-473-11	s	CONNECTOR, 8P, MALE
CN104	1-506-472-11	s	CONNECTOR, 7P, MALE
CN105	1-562-883-11	o	CONNECTOR, FPC 20P, FEMALE
CN106	1-564-706-11	o	PIN HEADER, STRAIGHT 4P
D101	8-719-400-18	s	DIODE MA152WK
D102	8-719-812-43	s	LED TLG124A, GRN
D103	8-719-812-43	s	LED TLG124A, GRN
D104	8-719-812-43	s	LED TLG124A, GRN
D105	8-719-812-43	s	LED TLG124A, GRN
D106	8-719-812-41	s	LED TLR124 RED
D107	8-719-812-43	s	LED TLG124A, GRN
FB1	1-543-256-11	s	BEAD, FERRITE
FB2	1-543-256-11	s	BEAD, FERRITE
FB3	1-543-256-11	s	BEAD, FERRITE
IC101	8-752-835-62	s	IC CXP80524-053Q
IC102	8-759-946-81	s	IC CXD1052Q-Z
IC103	8-759-983-69	s	IC LM358PS
IC104	8-759-929-26	s	IC TL431CPS
IC105	8-759-983-69	s	IC LM358PS
IC106	8-759-983-69	s	IC LM358PS
IC107	8-752-030-63	s	IC CXA1046M
IC108	8-752-030-63	s	IC CXA1046M
IC109	8-759-983-69	s	IC LM358PS
IC110	8-759-983-69	s	IC LM358PS
IC111	8-759-925-80	s	IC SN74HC14ANS
IC112	8-759-925-76	s	IC SN74HC08ANS
IC113	8-759-239-23	s	IC TC74HC86AF
IC114	8-759-008-67	s	IC MC14066BF
IC115	8-759-925-90	s	IC SN74HC74ANS
IC116	8-759-926-77	s	IC SN74HC541ANS
IC117	8-759-927-46	s	IC SN74HC00ANS
L101	1-408-425-00	s	INDUCTOR 220uH
L102	1-408-425-00	s	INDUCTOR 220uH
L103	1-412-533-11	s	COIL 47uH
L104	1-412-533-11	s	COIL 47uH
Q101	8-729-216-22	s	TRANSISTOR 2SA1162-G
Q102	8-729-230-49	s	TRANSISTOR 2SC2712-YG
Q103	8-729-216-22	s	TRANSISTOR 2SA1162-G
Q104	8-729-230-49	s	TRANSISTOR 2SC2712-YG
Q105	8-729-216-22	s	TRANSISTOR 2SA1162-G
Q106	8-729-230-49	s	TRANSISTOR 2SC2712-YG
Q107	8-729-216-22	s	TRANSISTOR 2SA1162-G
Q108	8-729-230-49	s	TRANSISTOR 2SC2712-YG
Q109	8-729-230-49	s	TRANSISTOR 2SC2712-YG
Q110	8-729-230-49	s	TRANSISTOR 2SC2712-YG
Q111	8-729-230-49	s	TRANSISTOR 2SC2712-YG
Q112	8-729-230-49	s	TRANSISTOR 2SC2712-YG
Q113	8-729-230-49	s	TRANSISTOR 2SC2712-YG
Q114	8-729-901-00	s	TRANSISTOR DTC124EK
Q115	8-729-901-00	s	TRANSISTOR DTC124EK
Q116	8-729-901-00	s	TRANSISTOR DTC124EK
Q117	8-729-901-00	s	TRANSISTOR DTC124EK

NOTE: Please see page E-27 for the parts that are not listed in the parts list.

(SV-123 BOARD)

Ref. No. or Q'ty	Part No.	SP	Description
Q118	8-729-901-00	s	TRANSISTOR DTC124EK
Q119	8-729-901-00	s	TRANSISTOR DTC124EK
R104	1-216-683-11	s	METAL, CHIP 22K 0.5% 1/10W
R107	1-216-687-11	s	METAL, CHIP 33K 0.5% 1/10W
R108	1-216-687-11	s	METAL, CHIP 33K 0.5% 1/10W
R111	1-216-695-11	s	METAL, CHIP 68K 0.5% 1/10W
R112	1-216-683-11	s	METAL, CHIP 22K 0.5% 1/10W
R113	1-216-692-11	s	METAL, CHIP 51K 0.5% 1/10W
R116	1-216-687-11	s	METAL, CHIP 33K 0.5% 1/10W
R117	1-216-673-11	s	METAL, CHIP 8.2K 0.5% 1/10W
R119	1-216-679-11	s	METAL, CHIP 15K 0.5% 1/10W
R122	1-216-043-00	s	METAL, CHIP 560 5% 1/10W
R123	1-216-691-11	s	METAL, CHIP 47K 0.5% 1/10W
R124	1-216-696-11	s	METAL, CHIP 75K 0.5% 1/10W
R131	1-216-651-11	s	METAL, CHIP 1K 0.5% 1/10W
R134	1-216-662-11	s	METAL, CHIP 3K 0.5% 1/10W
R146	1-216-651-11	s	METAL, CHIP 1K 0.5% 1/10W
R149	1-216-662-11	s	METAL, CHIP 3K 0.5% 1/10W
RV101	1-241-632-11	s	RES, ADJ, CARBON 47K
RV102	1-241-632-11	s	RES, ADJ, CARBON 47K
RV103	1-238-017-11	s	RES, ADJ, CARBON 22K
RV104	1-238-017-11	s	RES, ADJ, CARBON 22K
SW101	1-570-602-11	s	SWITCH, DIP 2-CKT
X101	1-579-064-11	s	VIBRATOR, CRYSTAL

SW-420 BOARD

Ref. No. or Q'ty	Part No.	SP	Description
1pc	1-637-270-11	o	PC BOARD, SW-420
CN8	1-946-966-11	o	HARNESS (SW)
CN9	1-506-469-11	s	PIN, CONNECTOR 4P
D49	8-719-911-19	s	DIODE 1SS119
D50	8-719-911-19	s	DIODE 1SS119
D51	8-719-911-19	s	DIODE 1SS119
D52	8-719-911-19	s	DIODE 1SS119
S28	1-554-937-11	s	SWITCH, KEY BOARD
S29	1-554-937-11	s	SWITCH, KEY BOARD
S30	1-554-937-11	s	SWITCH, KEY BOARD
S31	1-554-937-11	s	SWITCH, KEY BOARD

SW-426 BOARD

Ref. No. or Q'ty	Part No.	SP	Description
1pc	1-637-279-11	o	PC BOARD, SW-426
CN1	1-506-471-11	s	CONNECTOR, 6P, MALE
R1	1-249-418-11	s	CARBON 1.2K 5% 1/4W
R2	1-249-418-11	s	CARBON 1.2K 5% 1/4W
R3	1-249-418-11	s	CARBON 1.2K 5% 1/4W
R4	1-249-418-11	s	CARBON 1.2K 5% 1/4W
S1	1-554-970-11	s	SWITCH, SLIDE

SW-453 BOARD

Ref. No. or Q'ty	Part No.	SP	Description
1pc	1-637-293-12	o	PC BOARD, SW-453
CN1	1-506-468-11	s	CONNECTOR, 3P, MALE
R1	1-247-804-11	s	CARBON 75 5% 1/4W
S1	1-554-970-11	s	SWITCH, SLIDE

SW-454 BOARD

Ref. No. or Q'ty	Part No.	SP	Description
1pc	1-637-294-12	o	PC BOARD, SW-454
CN1	1-506-469-11	s	CONNECTOR, 4P, MALE
S1	1-554-970-11	s	SWITCH, SLIDE

NOTE: Please see page E-27 for the parts that are not listed in the parts list.

SY-155A BOARD

Ref. No. or Q'ty	Part No.	SP	Description
1pc	A-7850-807-A	o	COMPLETE PCB, SY-155A
(This assembly includes the following parts.)			
2pcs	1-526-660-21	s	SOCKET, IC (DP) 32P
1pcs	1-526-950-11	o	SOCKET, IC 64P
1pc	1-540-080-11	s	SOCKET, IC (IC113) 68P
1pc	2-355-254-01	s	SPACER (A), LCD
6pcs	3-330-034-01	s	WASHER
6pcs	4-861-614-61	o	HOLDER, PC BOARD
1pc	4-924-029-11	s	WASHER
6pcs	4-928-330-01	o	NUT (M2.6) (JIS 3), HEXAGON
6pcs	7-621-773-95	s	SCREW +B 2.6X6
6pcs	7-682-903-11	s	SCREW +PWH 3X6
BT1	1-528-229-11	o	BATTERY, LITHIUM CR-2450
C3	1-163-127-00	s	CERAMIC, CHIP 270PF 5% 50V
C7	1-126-157-11	s	ELECT 10uF 20% 16V
C8	1-130-495-00	s	MYLAR 0.1uF 5% 50V
C12	1-125-447-11	s	DOUBLE LAYERS 1FARAD 5.5V
C13	1-125-447-11	s	DOUBLE LAYERS 1FARAD 5.5V
C19	1-164-004-11	s	CERAMIC, CHIP 0.1uF 10% 25V
C20	1-164-004-11	s	CERAMIC, CHIP 0.1uF 10% 25V
C21	1-164-004-11	s	CERAMIC, CHIP 0.1uF 10% 25V
C22	1-164-004-11	s	CERAMIC, CHIP 0.1uF 10% 25V
C23	1-164-004-11	s	CERAMIC, CHIP 0.1uF 10% 25V
C24	1-164-004-11	s	CERAMIC, CHIP 0.1uF 10% 25V
C25	1-164-004-11	s	CERAMIC, CHIP 0.1uF 10% 25V
C26	1-164-004-11	s	CERAMIC, CHIP 0.1uF 10% 25V
C27	1-164-004-11	s	CERAMIC, CHIP 0.1uF 10% 25V
C28	1-164-004-11	s	CERAMIC, CHIP 0.1uF 10% 25V
C29	1-164-004-11	s	CERAMIC, CHIP 0.1uF 10% 25V
C30	1-164-004-11	s	CERAMIC, CHIP 0.1uF 10% 25V
C31	1-164-004-11	s	CERAMIC, CHIP 0.1uF 10% 25V
C32	1-164-004-11	s	CERAMIC, CHIP 0.1uF 10% 25V
C33	1-164-004-11	s	CERAMIC, CHIP 0.1uF 10% 25V
C34	1-164-004-11	s	CERAMIC, CHIP 0.1uF 10% 25V
C35	1-164-004-11	s	CERAMIC, CHIP 0.1uF 10% 25V
C36	1-164-004-11	s	CERAMIC, CHIP 0.1uP 10% 25V
C37	1-164-004-11	s	CERAMIC, CHIP 0.1uF 10% 25V
C38	1-164-004-11	s	CERAMIC, CHIP 0.1uF 10% 25V
C39	1-164-004-11	s	CERAMIC, CHIP 0.1uF 10% 25V
C40	1-164-004-11	s	CERAMIC, CHIP 0.1uF 10% 25V
C41	1-164-004-11	s	CERAMIC, CHIP 0.1uF 10% 25V
C42	1-164-004-11	s	CERAMIC, CHIP 0.1uF 10% 25V
C43	1-164-004-11	s	CERAMIC, CHIP 0.1uF 10% 25V
C44	1-164-004-11	s	CERAMIC, CHIP 0.1uF 10% 25V
C45	1-164-004-11	s	CERAMIC, CHIP 0.1uF 10% 25V
C46	1-164-004-11	s	CERAMIC, CHIP 0.1uF 10% 25V
C47	1-164-004-11	s	CERAMIC, CHIP 0.1uF 10% 25V
C48	1-164-004-11	s	CERAMIC, CHIP 0.1uF 10% 25V
C49	1-164-004-11	s	CERAMIC, CHIP 0.1uF 10% 25V
C50	1-164-004-11	s	CERAMIC, CHIP 0.1uF 10% 25V
C51	1-164-004-11	s	CERAMIC, CHIP 0.1uF 10% 25V
C52	1-164-004-11	s	CERAMIC, CHIP 0.1uF 10% 25V
C53	1-164-004-11	s	CERAMIC, CHIP 0.1uF 10% 25V
C54	1-164-004-11	s	CERAMIC, CHIP 0.1uF 10% 25V
C55	1-164-004-11	s	CERAMIC, CHIP 0.1uF 10% 25V
C57	1-164-004-11	s	CERAMIC, CHIP 0.1uF 10% 25V

(SY-155A BOARD)

Ref. No. or Q'ty	Part No.	SP	Description
C58	1-164-004-11	s	CERAMIC, CHIP 0.1uF 10% 25V
C59	1-164-004-11	s	CERAMIC, CHIP 0.1uF 10% 25V
C60	1-164-004-11	s	CERAMIC, CHIP 0.1uF 10% 25V
C61	1-164-004-11	s	CERAMIC, CHIP 0.1uP 10% 25V
C62	1-164-004-11	s	CERAMIC, CHIP 0.1uF 10% 25V
C63	1-164-004-11	s	CERAMIC, CHIP 0.1uF 10% 25V
C64	1-164-004-11	s	CERAMIC, CHIP 0.1uF 10% 25V
C65	1-164-004-11	s	CERAMIC, CHIP 0.1uF 10% 25V
C66	1-164-004-11	s	CERAMIC, CHIP 0.1uF 10% 25V
C67	1-164-004-11	s	CERAMIC, CHIP 0.1uF 10% 25V
C68	1-164-004-11	s	CERAMIC, CHIP 0.1uF 10% 25V
C69	1-164-004-11	s	CERAMIC, CHIP 0.1uF 10% 25V
C70	1-164-004-11	s	CERAMIC, CHIP 0.1uF 10% 25V
C71	1-164-004-11	s	CERAMIC, CHIP 0.1uF 10% 25V
C72	1-164-004-11	s	CERAMIC, CHIP 0.1uF 10% 25V
C74	1-164-004-11	s	CERAMIC, CHIP 0.1uF 10% 25V
C75	1-164-004-11	s	CERAMIC, CHIP 0.1uF 10% 25V
C76	1-164-004-11	s	CERAMIC, CHIP 0.1uF 10% 25V
CN1	1-564-706-11	o	PIN HEADER, STRAIGHT 4P
CN2	1-506-475-11	s	CONNECTOR, 10P, MALE
CN3	1-506-473-11	s	CONNECTOR, 8P, MALE
CN4	1-506-473-11	s	CONNECTOR, 8P, MALE
CN5	1-506-473-11	s	CONNECTOR, 8P, MALE
CN6	1-506-471-11	s	CONNECTOR, 6P, MALE
CN7	1-506-479-11	s	PIN, CONNECTOR 14P
CN8	1-506-475-11	s	CONNECTOR, 10P, MALE
CN9	1-562-883-11	o	CONNECTOR, FPC 20P, FEMALE
CN10	1-562-883-11	o	CONNECTOR, FPC 20P, FEMALE
CN11	1-562-993-11	o	SOCKET, CONNECTOR 30P
CN12	1-562-993-11	o	SOCKET, CONNECTOR 30P
CN13	1-563-335-11	s	CONNECTOR, DIN 48P, FEMALE
CN14	1-563-335-11	s	CONNECTOR, DIN 48P, FEMALE
CN15	1-563-335-11	s	CONNECTOR, DIN 48P, FEMALE
D1	8-719-981-01	s	DIODE ERA81-004
D2	8-719-981-01	s	DIODE ERA81-004
D3	8-719-981-01	s	DIODE ERA81-004
D4	8-719-981-01	s	DIODE ERA81-004
D5	8-719-800-56	s	DIODE TLUR164
D6	8-719-800-56	s	DIODE TLUR164
D7	8-719-800-26	s	DIODE TLUG164
D8	8-719-938-68	s	DIODE GL3HY8
D9	8-719-938-68	s	DIODE GL3HY8
D10	8-719-938-68	s	DIODE GL3HY8
D11	8-719-800-26	s	DIODE TLUG164
D12	8-719-800-56	s	DIODE TLUR164
D13	8-719-800-56	s	DIODE TLUR164
D14	8-719-800-56	s	DIODE TLUR164
D15	8-719-800-26	s	DIODE TLUG164
D16	8-719-981-01	s	DIODE ERA81-004
FB1	1-543-622-11	s	BEAD, FERRITE (CHIP)
FB2	1-543-622-11	s	BEAD, FERRITE (CHIP)
FB3	1-543-622-11	s	BEAD, FERRITE (CHIP)
FB4	1-543-622-11	s	BEAD, FERRITE (CHIP)
FB5	1-543-622-11	s	BEAD, FERRITE (CHIP)
FB6	1-543-622-11	s	BEAD, FERRITE (CHIP)
FB7	1-543-622-11	s	BEAD, FERRITE (CHIP)
FB8	1-543-622-11	s	BEAD, FERRITE (CHIP)
FB9	1-543-622-11	s	BEAD, FERRITE (CHIP)

NOTE: Please see page E-27 for the parts that are not listed in the parts list.

(SY-155A BOARD)

Ref. No. or Q'ty	Part No.	SP	Description
FB10	1-543-622-11	s	BEAD, FERRITE (CHIP)
FB11	1-543-622-11	s	BEAD, FERRITE (CHIP)
FB12	1-543-622-11	s	BEAD, FERRITE (CHIP)
FB13	1-543-622-11	s	BEAD, FERRITE (CHIP)
FB14	1-543-622-11	s	BEAD, FERRITE (CHIP)
FB15	1-543-622-11	s	BEAD, FERRITE (CHIP)
FB16	1-543-622-11	s	BEAD, FERRITE (CHIP)
FB17	1-543-622-11	s	BEAD, FERRITE (CHIP)
FB18	1-543-622-11	s	BEAD, FERRITE (CHIP)
FB19	1-543-622-11	s	BEAD, FERRITE (CHIP)
FB20	1-543-622-11	s	BEAD, FERRITE (CHIP)
FB21	1-543-622-11	s	BEAD, FERRITE (CHIP)
FB22	1-543-622-11	s	BEAD, FERRITE (CHIP)
FB23	1-543-622-11	s	BEAD, FERRITE (CHIP)
FB24	1-543-622-11	s	BEAD, FERRITE (CHIP)
FB25	1-543-622-11	s	BEAD, FERRITE (CHIP)
FB26	1-543-622-11	s	BEAD, FERRITE (CHIP)
FB27	1-543-622-11	s	BEAD, FERRITE (CHIP)
FB28	1-543-622-11	s	BEAD, FERRITE (CHIP)
FB29	1-543-622-11	s	BEAD, FERRITE (CHIP)
FB30	1-543-622-11	s	BEAD, FERRITE (CHIP)
FB31	1-543-622-11	s	BEAD, FERRITE (CHIP)
FB32	1-543-622-11	s	BEAD, FERRITE (CHIP)
FB33	1-543-622-11	s	BEAD, FERRITE (CHIP)
FB34	1-543-622-11	s	BEAD, FERRITE (CHIP)
FB35	1-543-622-11	s	BEAD, FERRITE (CHIP)
FB36	1-543-622-11	s	BEAD, FERRITE (CHIP)
FB37	1-543-622-11	s	BEAD, FERRITE (CHIP)
FB38	1-543-622-11	s	BEAD, FERRITE (CHIP)
FB39	1-543-622-11	s	BEAD, FERRITE (CHIP)
FB40	1-543-622-11	s	BEAD, FERRITE (CHIP)
FB41	1-543-622-11	s	BEAD, FERRITE (CHIP)
FB42	1-543-622-11	s	BEAD, FERRITE (CHIP)
FB43	1-543-622-11	s	BEAD, FERRITE (CHIP)
FB44	1-543-622-11	s	BEAD, FERRITE (CHIP)
FB45	1-543-622-11	s	BEAD, FERRITE (CHIP)
FB46	1-543-622-11	s	BEAD, FERRITE (CHIP)
FB47	1-543-622-11	s	BEAD, FERRITE (CHIP)
FB48	1-543-622-11	s	BEAD, FERRITE (CHIP)
FB49	1-543-622-11	s	BEAD, FERRITE (CHIP)
FB50	1-543-622-11	s	BEAD, FERRITE (CHIP)
FB51	1-543-622-11	s	BEAD, FERRITE (CHIP)
FB52	1-543-622-11	s	BEAD, FERRITE (CHIP)
FB53	1-543-622-11	s	BEAD, FERRITE (CHIP)
FB54	1-543-622-11	s	BEAD, FERRITE (CHIP)
FB55	1-543-622-11	s	BEAD, FERRITE (CHIP)
FB56	1-543-622-11	s	BEAD, FERRITE (CHIP)
FB57	1-543-622-11	s	BEAD, FERRITE (CHIP)
FB58	1-543-622-11	s	BEAD, FERRITE (CHIP)
FB59	1-543-622-11	s	BEAD, FERRITE (CHIP)
FB60	1-543-622-11	s	BEAD, FERRITE (CHIP)
ICA4	8-759-209-05	s	IC TMP82C79P-2
ICA5	8-759-926-77	s	IC SN74HC541ANS
ICA6	8-759-926-49	s	IC SN74HC245ANS
ICB5	8-759-926-77	s	IC SN74HC541ANS
ICB6	8-759-926-49	s	IC SN74HC245ANS
ICC1	8-759-151-04	s	IC UPD43256AGU-10LL

(SY-155A BOARD)

Ref. No. or Q'ty	Part No.	SP	Description
ICC2	8-759-151-04	s	IC UPD43256AGU-10LL
ICC3	8-759-183-93	s	IC 27C010-IFC3V4.1
ICC4	8-759-183-94	s	IC 27C010-IFC4V4.1
ICC6	8-759-926-77	6	IC SN74HC541ANS
ICD3	8-759-929-77	s	IC SN74LS03NS
ICD6	8-759-926-77	s	IC SN74HC541ANS
ICD1A	8-759-927-46	s	IC SN74HC00ANS
ICD1B	8-759-927-46	s	IC SN74HC00ANS
ICE6	8-759-926-77	s	IC SN74HC541ANS
ICF2	8-759-151-34	s	IC UPD70216L-10
ICF4	8-759-505-42	s	IC CXD8139AQ
ICF5	8-759-149-10	s	IC UPD4702G
ICF6	8-759-926-77	s	IC SN74HC541ANS
ICG1	8-759-149-09	s	IC UPD71059GB-10-3B4
ICG3	8-759-205-37	s	IC TC74HC574F
ICG4	8-759-925-85	s	IC SN74HC32ANS
ICG5	8-759-926-77	s	IC SN74HC541ANS
ICG6	8-759-926-76	s	IC SN74HC540ANS
ICH1	8-759-149-09	s	IC UPD71059GB-10-3B4
ICH2	8-759-926-06	s	IC SN74HC126NS
ICH3A	8-759-205-37	s	IC TC74HC574F
ICH3B	8-759-926-77	s	IC SN74HC541ANS
ICH4A	8-759-925-76	s	IC SN74HC08ANS
ICH4B	8-759-925-90	s	IC SN74HC74ANS
ICH5A	8-759-925-74	s	IC SN74HC04ANS
ICH5B	8-759-008-57	s	IC MC34051P
ICJ2	8-759-926-29	s	IC SN74HC175ANS
ICJ5	8-759-183-87	s	IC 27C256A-SCCKV1.0
ICJ6	8-759-151-35	s	IC CXD8130Q
ICJ1A	8-759-149-07	s	IC UPD71054GB-10-3B4
ICJ1B	8-759-149-07	s	IC UPD71054GB-10-3B4
ICJ4A	8-759-926-11	s	IC SN74HC138ANS
ICJ4B	8-759-925-85	s	IC SN74HC32ANS
ICK2	8-759-973-71	s	IC TL7705CPS-B
ICK3	8-759-153-31	s	IC UPD78C11ACW-F08
ICK4	8-759-149-05	s	IC UPD71051GB-10-3B4
ICK5	8-759-183-87	s	IC 27C256A-SCCKV1.0
ICK6	8-759-151-35	s	IC CXD8130Q
ICL4A	8-759-926-49	s	IC SN74HC245ANS
ICL4B	8-759-926-80	s	IC SN74HC573BNS
L1	1-412-533-11	s	COIL 47uH
L2	1-412-533-11	s	COIL 47uH
L3	1-412-533-11	s	COIL 47uH
R9	1-249-390-11	s	CARBON 5.6 5% 1/4W
RB1	1-231-410-00	s	RESISTOR BLOCK 10Kx8
RB2	1-231-410-00	s	RESISTOR BLOCK 10Kx8
RB3	1-231-410-00	s	RESISTOR BLOCK 10Kx8
RB4	1-231-405-00	s	RESISTOR BLOCK 1K
RB6	1-231-410-00	s	RESISTOR BLOCK 10Kx8
RB8	1-231-410-00	s	RESISTOR BLOCK 10Kx8
RB9	1-231-410-00	s	RESISTOR BLOCK 10Kx8
RB10	1-231-410-00	s	RESISTOR BLOCK 10Kx8
RB11	1-231-410-00	s	RESISTOR BLOCK 10Kx8
RB12	1-231-410-00	s	RESISTOR BLOCK 10Kx8
RB13	1-231-410-00	s	RESISTOR BLOCK 10Kx8

NOTE: Please see page E-27 for the parts that are not listed in the parts list.

(SY-155A BOARD)

Ref. No. or Q'ty	Part No.	SP	Description
RB14	1-231-410-00	s	RESISTOR BLOCK 10Kx8
RB15	1-231-410-00	s	RESISTOR BLOCK 10Kx8
RB16	1-231-410-00	s	RESISTOR BLOCK 10Kx8
SW1	1-552-539-00	s	SWITCH, TACTILE
SW3	1-570-728-11	s	SWITCH, DIP
SW5	1-570-728-11	s	SWITCH, DIP
SW6	1-570-602-11	s	SWITCH, DIP 2-CKT
X1	1-577-110-11	s	VIBRATOR, CRYSTAL
X2	1-567-862-11	s	CRYSTAL, 4.9152MHZ
X3	1-527-848-00	s	OSCILLATOR, CRYSTAL
X4	1-567-867-11	s	CRYSTAL, 14.500MHz

VR-109 BOARD

Ref. No. or Q'ty	Part No.	SP	Description
1pc	1-637-284-13	o	PC BOARD, VR-109
CN1	1-506-470-11	s	CONNECTOR, 5P, MALE
CN2	1-506-470-11	s	CONNECTOR, 5P, MALE

FRAME

Ref. No. or Q'ty	Part No.	SP	Description
MAIN OVERALL ASSY			
-	⚠ 1-450-293-11	s	TRANSFORMER POWER
-	⚠ 1-532-285-11	s	FUSE, TIME LAG (For EK)
	⚠ 1-532-825-11	s	FUSE, GLASS TUBE (For J,UC)
-	1-590-305-11	s	WIRE, FLEXIBLE CARD (30P)
-	⚠ 1-946-797-11	s	HARNESS, SUB (PS)
	1-562-286-11	o	HOUSING, CONNECTOR 5P
-	1-570-117-21	s	SWITCH SEESAW (AC POWER)
-	1-562-169-11	o	RECEPTACLE
-	1-562-253-00	o	HOUSING, 3P
-	1-562-254-00	o	HOUSING, 4P
-	1-562-255-00	o	HOUSING, 5P
-	1-562-256-00	o	HOUSING, 6P
-	1-562-258-00	o	HOUSING, CONNECTOR 10P
-	1-562-259-00	o	HOUSING, CONNECTOR 12P
-	1-562-260-11	o	CONTACT SOCKET
-	1-569-191-11	o	TERMINAL, SOLDERLESS
-	1-569-193-11	o	TERMINAL, SOLDERLESS
-	1-569-196-11	o	HOUSING, CONNECTOR 3P
-	1-569-196-41	o	HOUSING, CONNECTOR 3P
-	1-569-197-11	o	HOUSING, CONNECTOR 4P
-	1-569-198-11	o	HOUSING, CONNECTOR 5P
-	1-569-198-21	o	HOUSING, CONNECTOR 5P
-	1-569-199-11	o	HOUSING, CONNECTOR 6P
-	1-569-199-21	o	HOUSING, CONNECTOR 6P
-	1-569-199-31	o	HOUSING, CONNECTOR 6P
-	1-569-199-41	o	HOUSING, CONNECTOR 6P
-	1-569-200-11	o	HOUSING, CONNECTOR 7P
-	1-569-200-31	o	HOUSING, CONNECTOR 7P
-	1-569-200-41	o	HOUSING, CONNECTOR 7P
-	1-569-201-11	o	HOUSING, CONNECTOR 8P
-	1-569-201-31	o	HOUSING, CONNECTOR 8P
-	1-569-201-41	o	HOUSING, CONNECTOR 8P
-	1-569-203-11	o	HOUSING, CONNECTOR 10P
-	1-569-203-21	o	HOUSING, CONNECTOR 10P
-	1-569-203-31	o	HOUSING, CONNECTOR 10P
-	1-569-203-41	o	HOUSING, CONNECTOR 10P
-	1-569-205-11	o	HOUSING, CONNECTOR 12P
-	1-569-205-31	o	HOUSING, CONNECTOR 12P
-	1-569-205-41	o	HOUSING, CONNECTOR 12P
-	1-569-206-31	o	HOUSING, CONNECTOR 13P
-	1-569-206-41	o	HOUSING, CONNECTOR 13P
-	1-569-207-11	o	HOUSING, CONNECTOR 14P
-	1-569-207-41	o	HOUSING, CONNECTOR 14P
-	8-835-205-01	o	MOTOR, DC U-2A
-	8-835-206-01	s	MOTOR, DC BHF-2803A
-	8-848-548-11	s	DRUM ASSY DOH-14A.
MD ASSY			P)
-	1-590-303-11	s	WIRE, FLEXIBLE CARD (13P)
-	1-590-306-11	s	WIRE, FLEXIBLE CARD (36P)
-	1-590-308-11	s	WIRE, FLEXIBLE CARD (20
-	1-808-281-51	s	SENSOR
-	1-946-958-11	o	HARNESS (CAP)
CONTOROL MOTOR ASSY			
-	1-464-724-11	s	ENCODER, ROTARY
GUIDE (L) BLOCK ASSY			
-	1-161-055-00	s	CERAMIC 0.022uF 10% 50V

NOTE: Please see page E-27 for the parts that are not listed in the parts list.

(FRAME)

Ref. No. or Q'ty	Part No.	SP	Description
-	1-541-560-11	s	MOTOR, DC
-	1-570-771-11	s	SWITCH
-	1-569-193-11	o	TERMINAL, SOLDERLESS
	1-569-198-11	o	HOUSING, CONNECTOR 5
CONNECTOR PANEL SUB ASSY			
-	1-946-959-11	o	HARNESS (RM)
-	1-946-960-11	o	HARNESS (9P)
-	1-946-961-12	o	HARNESS (FS)
-	1-569-193-11	o	TERMINAL, SOLDERLESS
	1-569-196-11	o	HOUSING, CONNECTOR 3P
	1-569-197-11	o	HOUSING, CONNECTOR 4P
	1-569-197-21	o	HOUSING, CONNECTOR 4P
	1-569-199-11	o	HOUSING, CONNECTOR 6P
	1-569-200-11	o	HOUSING, CONNECTOR 7P
	1-569-201-11	o	HOUSING, CONNECTOR 8P
DIO ASSY			
-	1-561-781-11	s	CONNECTOR, BNC, FEMALE
-	1-569-193-11	o	TERMINAL, SOLDERLESS
	1-569-196-11	o	HOUSING, CONNECTOR 3P
	1-569-196-11	o	HOUSING, CONNECTOR 3P
	1-569-196-11	o	HOUSING, CONNECTOR 3P
	1-569-197-11	o	HOUSING, CONNECTOR 4P
	1-569-206-11	o	HOUSING, CONNECTOR 13P
REAR PANEL ASSY			
-	1-413-612-11	s	SWITCHING REGULATOR
-	⚠ 1-946-795-13	s	HARNESS, SUB (AC IN)
-	⚠ 1-946-796-11	s	HARNESS, SUB (VS)
-	⚠ 1-562-210-11	s	CONTACT, CONNECTOR
	1-562-211-11	o	HOUSING, CONNECTOR 3P
	⚠ 1-562-285-11	o	HOUSING, CONNECTOR 4P
	⚠ 1-562-833-11	o	HOUSING, CONNECTOR 7P
-	1-562-210-11	s	CONTACT, CONNETOR
	1-562-287-11	o	HOUSING, CONNECTOR 6P
VR-109 ASSY			
-	1-241-332-11	s	RES, VAR, CARBON 20K
HP-48 ASSY			
-	1-241-331-11	s	RES VAR CARON 10K/10K
-	1-507-863-51	s	JACK, PHONE
SP.SY-A ASSY			
-	1-590-307-11	s	WIRE, ELEXIBLE CARD (20P)
CASSETTE ILLUMINATION ASSY			
-	1-569-193-11	o	TERMINAL, SOLDERLESS
-	1-569-197-11	o	HOUSING, CONNECTOR 4P
-	8-719-820-27	s	LED TLY-256, YEL11.
ENCORDER ASSY			
-	1-466-469-11	s	ROTARY ENCORDER

ACCESSORIES SUPPLIED

Ref. No. or Q'ty	Part No.	SP	Description
-	⚠ 1-534-754-00	s	CORD, POWER (For J)
-	⚠ 1-590-910-11	s	CORD, POWER (For EK)
-	⚠ 1-557-377-11	s	CORD, POWER (For UC)

NOTE: Please see page E-27 for the parts that are not listed in the parts list.

SONY

DIGITAL AUDIO RECORDER

PCM-7050

SUPPLEMENT-4

APPLICABLE MANUAL:
PCM-7050 (UC, EK) Maintenance Manual
1st Edition Revised 7 (3-169-228-08)

APPLICABLE SERIAL No.:
PCM-7050 (UC): 37001 and higher
(EK): 57001 and higher

SUBJECT

TABLE OF CONTENTS

SECTION B CIRCUIT BOARD DIAGRAMS
SECTION C SCHEMATIC DIAGRAMS
SECTION E REPLACEABLE PARTS

Please replace and add this SUPPLEMENT-4 manual
to your own manual.

MAINTENANCE MANUAL

PCM-7050 (UC, EK)
9-976-741-02

Sony Corporation
Broadcast Products Company

Printed in Japan
1994. 7 08
© 1993
Published by Broadcast Products Company

TABLE OF CONTENTS

1. INSTALLATION
1-1. Packing 1-1
1-2. Installation Environment and Installation Space 1-2
1-3. Rack mounting method 1-4
1-4. Installation of the DABK-7030, DABK-7033 and DABK-7055 1-7
1-4-1. DABK-7030 Installation Procedure 1-7
1-4-2. DABK-7033 Installation Procedure 1-11
1-4-3. DABK-7055 Installation Procedure 1-14
1-5. Initial Settings of the Board's Switches and Volumes 1-16
1-5-1. Level schedule change (ADA-18 Board) 1-16
1-5-2. Fader Start/Stop Change Procedure (RM-77 Board) 1-17

2. SERVICE INFORMATION
2-1. Removal of Boards and Major Mechanical Parts 2-1
2-2. Board Arrangement View For PCM-7050 2-15
2-3. Cassette Compartment Service Information 2-16
2-4. Precautions for the main Parts replacement procedure 2-19
2-4-1. Installation position of the front panel and cassette compartment 2-19
2-5. Chip Parts Replacement Procedure ... 2-19
2-6. SERVICE INFORMATION CONCERNING THE SY-155A BOARD (SYSTEM CONTROL) 2-20
2-6-1. LED for confirming the operations of the SY-155A Board 2-20
2-6-2. Replacing the SY-155A Board 2-23
2-6-3. Replacing the lithium battery (CR-2450) 2-25
2-7. Self-diagnosis (error code) 2-26
2-7-1. Error codes 2-26
2-7-2. Remedy for error code "Error 2-05" 2-31
2-8. SERVICE MENU 2-32
2-8-1. SERVICE MENU Structure 2-33
2-8-2. SERVICE MENU items 2-34
2-9. Tools and Instruments 2-50

3. PERIODICAL INSPECTION AND MAINTENANCE
3-1. Cleaning 3-1
3-2. Periodical Inspection and Maintenance Procedures 3-2
3-3. Post-Repair Maintenance 3-2

4. MECHANICAL ADJUSTMENT, TAPE PATH ADJUSTMENT, SERVO BLOCK ADJUSTMENT, RECORDING/PLAYBACK BLOCK ADJUSTMENT, AND ERROR RATE CHECK
4-1. Preparation 4-5
4-2. Mechanical Device Test (operation check) 4-6
4-3. Mechanical Adjustment 4-6
4-3-1. Rotary encoder position adjustment 4-7
4-3-2. End sensor (S side, T side) operation check 4-9
4-3-3. FF/REW torque check 4-10
4-3-4. REW torque adjustment (DR-139 board adjustment) 4-11
4-3-5. REV torque adjustment 4-12
4-3-6. FWD back tension adjustment ... 4-13
4-3-7. EJECT torque check 4-13
4-3-8. FF/REW time check 4-14
4-4. Tape Path Adjustment 4-14
4-4-1. Tape running check (1) 4-14
4-4-2. Tape running check (2) 4-16
4-4-3. Tape path fine adjustment 4-16
4-4-4. RF raise up time check 4-19
4-4-5. Lack of RF waveform check in FF/REW 4-19
4-4-6. Overall tape path check 4-20
4-5. Servo Block Adjustment 4-21
4-5-1. SWP position adjustment 4-21
4-5-2. ATF playback AGC adjustment 4-22
4-6. Recording/Playback Adjustment (Recording current level adjustment) ... 4-24
4-6-1. Adjustment using the RF LEVEL CHECKER PD-817 4-24

4-6-2. Adjustment using a spectrum analyzer 4-32
4-7. EQ-H preset (RF-31 board) and error rate check 4-40
4-7-1. EQ-H preset (RF-31 board) 4-40
4-7-2. Error Rate Check 4-40
4-8. Cassette Compartment Operation Check 4-47

5. ELECTRICAL ADJUSTMENTS

5-1. Initial Preparation 5-2
5-1-1. Equipment Required 5-2
5-1-2. Initial switch and control settings 5-3
5-2. Signal Processing Adjustment (SP-13 BOARD) 5-5
5-2-1. RF PLL Adjustment 5-5
5-2-2. LTS Adjustment 5-9
5-3. A/D and D/A Adjustment (ADA-18 BOARD) 5-11
5-3-1. A/D Conversion Level Adjustment 5-11
5-3-2. Center potential adjustment 5-13
5-3-3. D/A conversion level adjustment 5-13
5-4. Time Code Adjustment (With the optional TC-58 board (DABK-7030) installed.) 5-17

A. BLOCK DIAGRAMS

OVERALL A-2
MECHANISM DECK A-5
ADA-18 ..... A-9
DIO-10 ..... A-12
DR-139 ..... A-15
KY-192/LED-104/SW-420 ..... A-19
MEM-40A A-23
PS-211 ..... A-27
RF-31 ..... A-31
RM-77 ..... A-34
SP-13 ..... A-41
SP-17C A-47
SY-155A A-51
SV-123 ..... A-59

B. CIRCUIT BOARD DIAGRAMS

AC-104 ..... B-2
ADA-18 ..... B-6
CP-157A, CP-158, CP-171 ..... B-11
CP-172A, CP-172B, CP-173A, CP-173B B-12
CP-249, CP-250, CP-251, CP-256 ..... B-11(C)
DC-47 ..... B-14
DIO-10 ..... B-16
DR-139, HP-48 ..... B-18
KY-192 ..... B-22
LE-90A, LE-90B, LED-104 ..... B-26
MEM-40A B-28
PS-211 ..... B-31
RF-31, RM-77 ..... B-35
SP-13 ..... B-40
SP-17C B-45
SV-123 ..... B-49
SW-420, SW-426, SW-452, SW-453, SW-454 ..... B-52
SY-155A, VR-109 ..... B-56

C. SCHEMATIC DIAGRAMS

AC-104 ..... C-2
ADA-18 (1/2) C-7
ADA-18 (2/2) C-13
CP-157B C-21
CP-158 ..... C-23
CP-171 ..... C-25
CP-172A C-29
CP-172B C-31
CP-173A C-33
CP-173B C-35
DC-47 ..... C-37
DIO-10 ..... C-41
DR-139 ..... C-47
HP-48 ..... C-53
KY-192 ..... C-55
LE-90A C-63
LE-90B C-65
LED-104 ..... C-67
MEM-40A C-69
PS-211 ..... C-75
RF-31 ..... C-79
RM-77 ..... C-83
SP-13 ..... C-87
SP-17C C-95
SV-123 ..... C-99
SW-420 ..... C-105
SW-426 ..... C-109
SW-452
SW-453 ..... C-111
SW-454 ..... C-113
SY-155A (1/2) C-115
SY-155A (2/2) C-121
VR-109 ..... C-127
FRAME (1/4) C-129
FRAME (2/4) C-137
FRAME (3/4) C-143
FRAME (4/4) C-151

D. SEMICONDUCTOR PIN ASSIGNMENTS

E. REPLACEABLE PARTS

E-1. PARTS ORDERING INFORMATION E-1
E-2. EXPLODED VIEWS AND PARTS E-2
E-3. ELECTRICAL PARTS LIST E-27

NOTES ON INSTALLATION OF THE DABK-7030 AND DABK-7033

When installation of the DABK-7030 or DABK-7033 to the PCM-7050 of which serial No. is higher than following No.,it is not necessary to perform the following procedure.

Serial No. J; 17001 and higher
UC; 37001 and higher
EK; 57001 and higher

DABK-7030: Installation of TC panel (Supplied with DABK-7030) to the connector panel.
DABK-7033: Installation of harness with D-SUB connector (Supplied with DABK-7033) to the connector panel.

SW-420 BOARD (PCM-7050)
(1-637-270-11)
Component Side

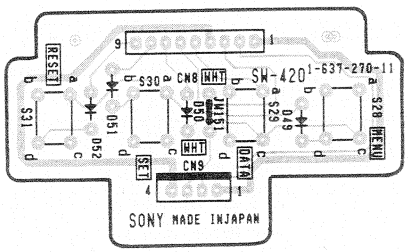

SOLDER SIDE PATTERN 1-637-270-11

SW-426 BOARD (PCM-7050)
(1-637-279-11)
Component Side

Serial No. UC 20001 to 37000
EK 50001 to 57000

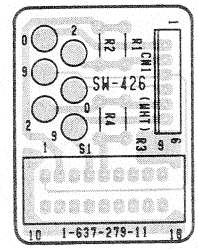

SOLDER SIDE PATTERN 1-637-279-11

SW-452 BOARD (PCM-7050)
(1-637-287-11)
Component Side

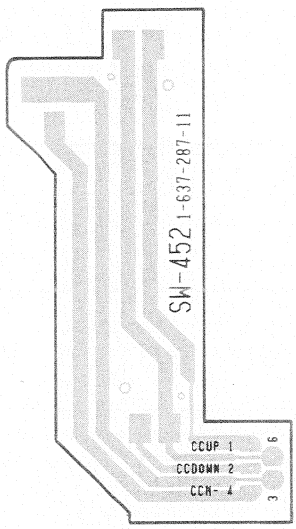

SOLDER SIDE PATTERN 1-637-287-11

SW-453 BOARD (PCM-7050)
(1-637-293-11)
Component Side

Serial No. UC 20001 to 37000
EK 50001 to 57000

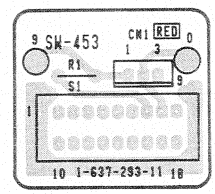

SOLDER SIDE PATTERN 1-637-293-11

SW-454 BOARD (PCM-7050)
(1-637-294-11)
Component Side

Serial No. UC 20001 to 37000
EK 50001 to 57000

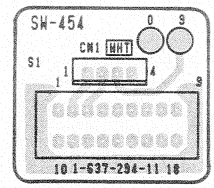

SOLDER SIDE PATTERN 1-637-294-11

Index No.	Parts No.	SP	Description
301	A-7850-803-B	s	COMPLETE PCB, ADA-18
302	A-7850-805-A	s	COMPLETE PCB, SP-13
303	A-7850-807-A	s	COMPLETE PCB, SY-155A
304	A-7850-809-A	s	COMPLETE PCB, DIO-10
305	A-7850-811-A	s	COMPLETE PCB, MEM-40A
306	1-590-307-11	s	WIRE, FLEXIBLE CARD (20P)
307	3-437-289-11	s	SPRING, TENSION
308	3-703-141-00	o	HOLDER, PCB
309	4-818-403-00	s	RIVET, NYLON
310	4-861-614-11	s	HOLDER, PC BOARD
311	7-682-546-09	s	SCREW +B 3x5
312	7-682-547-04	s	SCREW +B 3x6
313	7-682-903-11	s	SCREW +PWH 3x6

[DABK-7055]

314	A-7850-760-A	o	COMPLETE PCB, MEM-40C

REAR PANEL ASSY

Serial No. J; 10001 to 17000
UC; 20001 to 37000
EK; 50001 to 57000

Index No.	Parts No.	SP	Description
401	A-7850-820-A	0	MOUNTED CIRCUIT BOARD, RM-77
402	X-2068-004-0	S	TERMINAL ASSY
403	1-413-612-11	S	SWITCHING REGULATOR
⚠404	1-532-825-11	S	FUSE, GRASS TUBE (For J,UC)
	1-532-285-00	S	FUSE, TIME-LAG (For EK)
405	1-561-781-11	S	CONNECTOR, BNC (RECEPTACLE)
406	1-637-275-11	0	PRINTED CIRCUIT BOARD, AC-104
407	1-637-276-13	0	PRINTED CIRCUIT BOARD, CP-171
408	1-637-277-11	0	PRINTED CIRCUIT BOARD, CP-157A
409	1-637-279-11	0	PRINTED CIRCUIT BOARD, SW-426
410	1-637-280-11	0	PRINTED CIRCUIT BOARD, CP-172A
411	1-637-281-11	0	PRINTED CIRCUIT BOARD, CP-172B
412	1-637-282-12	0	PRINTED CIRCUIT BOARD, CP-158
413	1-637-291-12	0	PRINTED CIRCUIT BOARD, CP-173A
414	1-637-292-12	0	PRINTED CIRCUIT BOARD, CP-173B
415	1-637-293-12	0	PRINTED CIRCUIT BOARD, SW-453
416	1-637-294-12	0	PRINTED CIRCUIT BOARD, SW-454
⚠417	1-946-795-11	S	HARNESS, SUB (AC IN)
⚠418	1-946-796-12	S	HARNESS, SUB (VS)
419	1-946-959-11	0	HARNESS, SUB (RM)
420	1-946-960-12	0	HARNESS (9P)
421	1-946-961-12	0	HARNESS, SUB (FS)
422	2-068-008-00	S	WASHER
423	3-166-944-01	0	PLATE, BLIND
424	3-166-945-01	0	PLATE (25P), BLIND, D-SUB
425	3-166-948-01	0	PANEL,DIO
426	3-166-954-02	0	PANEL,CONNECTOR
427	3-166-956-03	0	PANEL, REAR (For J,UC)
	3-166-956-12	0	PANEL, REAR (For EK)
428	3-673-910-00	0	SCREW, CONNECTOR
429	4-601-472-00	0	COVER, FUSE
430	4-818-403-00	S	RIVET, NYLON
431	7-621-775-10	S	SCREW +B 2.6x4
432	7-623-422-07	0	LW 3, TYPE B
433	7-682-546-09	S	SCREW +B 3x5
434	7-682-547-04	S	SCREW +B 3x6
435	7-682-903-11	S	SCREW +PWH3x6
436	7-682-248-09	S	SCREW +K 3x8
[DABK-7030]			
437	1-561-781-11	S	CONNECTOR, BNC
438	1-637-295-11	0	PRINTED CIRCUIT BOARD, CP-159A
439	1-637-296-11	0	PRINTED CIRCUIT BOARD, CP-159B
440	1-637-297-11	0	PRINTED CIRCUIT BOARD, CP-252
441	1-637-298-11	0	PRINTED CIRCUIT BOARD, SW-455
442	3-166-878-01	0	PANEL, TC
443	7-621-775-10	S	SCREW +B 2.6x4

Serial No. J; 17001 and Higher
UC; 37001 and Higher
EK; 57001 and Higher

Index No.	Parts No.	SP	Description
401	A-7850-820-A	0	MOUNTED CIRCUIT BOARD, RM-77
402	X-2068-004-0	S	TERMINAL ASSY
403	1-413-612-11	S	SWITCHING REGULATOR
⚠404	1-532-825-11	S	FUSE, GRASS TUBE (For J,UC)
	1-532-285-00	S	FUSE, TIME-LAG (For EK)
406	1-637-275-11	0	PRINTED CIRCUIT BOARD, AC-104
407	1-637-276-13	0	PRINTED CIRCUIT BOARD, CP-171
⚠417	1-946-795-11	S	HARNESS, SUB (AC IN)
⚠418	1-946-796-11	S	HARNESS, SUB (VS)
422	2-068-008-00	S	WASHER
427	3-166-956-03	0	PANEL, REAR (For J,UC)
	3-166-956-12	0	PANEL, REAR (For EK)
429	4-601-472-00	0	COVER, FUSE
432	7-623-422-07	0	LW 3, TYPE B
433	7-682-546-09	S	SCREW +B 3x5
434	7-682-547-04	S	SCREW +B 3x6
435	7-682-903-11	S	SCREW +PWH3x6
436	7-682-248-09	S	SCREW +K 3x8
451	1-507-863-51	S	JACK, LARGE TYPE
452	1-554-958-11	S	SWITCH, SLIDE
453	1-563-770-11	S	CONNECTOR, D-SUB 9P, FEMALE
454	1-563-772-11	S	CONNECTOR, D-SUB 25P, FEMALE
455	1-563-773-21	S	CONNECTOR, D-SUB 37P, FEMALE
456	1-570-157-51	S	SWITCH, SLIDE
457	1-573-582-11	S	CONNECTOR, BNC
458	1-573-702-11	S	CONNECTOR, DIN 8P, FEMALE
459	1-650-592-11	0	PRINTED CIRCUIT BOARD, CP-249
460	1-650-593-11	0	PRINTED CIRCUIT BOARD, CP-250
461	1-650-594-11	0	PRINTED CIRCUIT BOARD, CP-251
462	1-651-318-11	0	PRINTED CIRCUIT BOARD, CP-256
463	1-750-785-11	0	CONNECTOR, XLR 3P, MALE
464	1-750-786-11	0	CONNECTOR, XLR 3P, FEMALE
465	1-750-787-11	0	CONNECTOR, XLR 3P, MALE
466	1-750-788-11	0	CONNECTOR, XLR 3P, FEMALE
467	3-171-450-01	0	ADAPTOR, SW
468	3-183-990-01	0	PANEL, CONNECTOR
469	7-621-775-10	S	SCREW +B 2.6x4
470	7-682-547-09	S	SCREW +B 3x6
471	7-685-646-79	S	SCREW +BVTP 3x8

REAR PANEL ASSY

Serial No. J; 10001 to 17000
UC; 20001 to 37000
EK; 50001 to 57000

Serial No. J; 17001 and higher
UC; 37001 and higher
EK; 57001 and higher

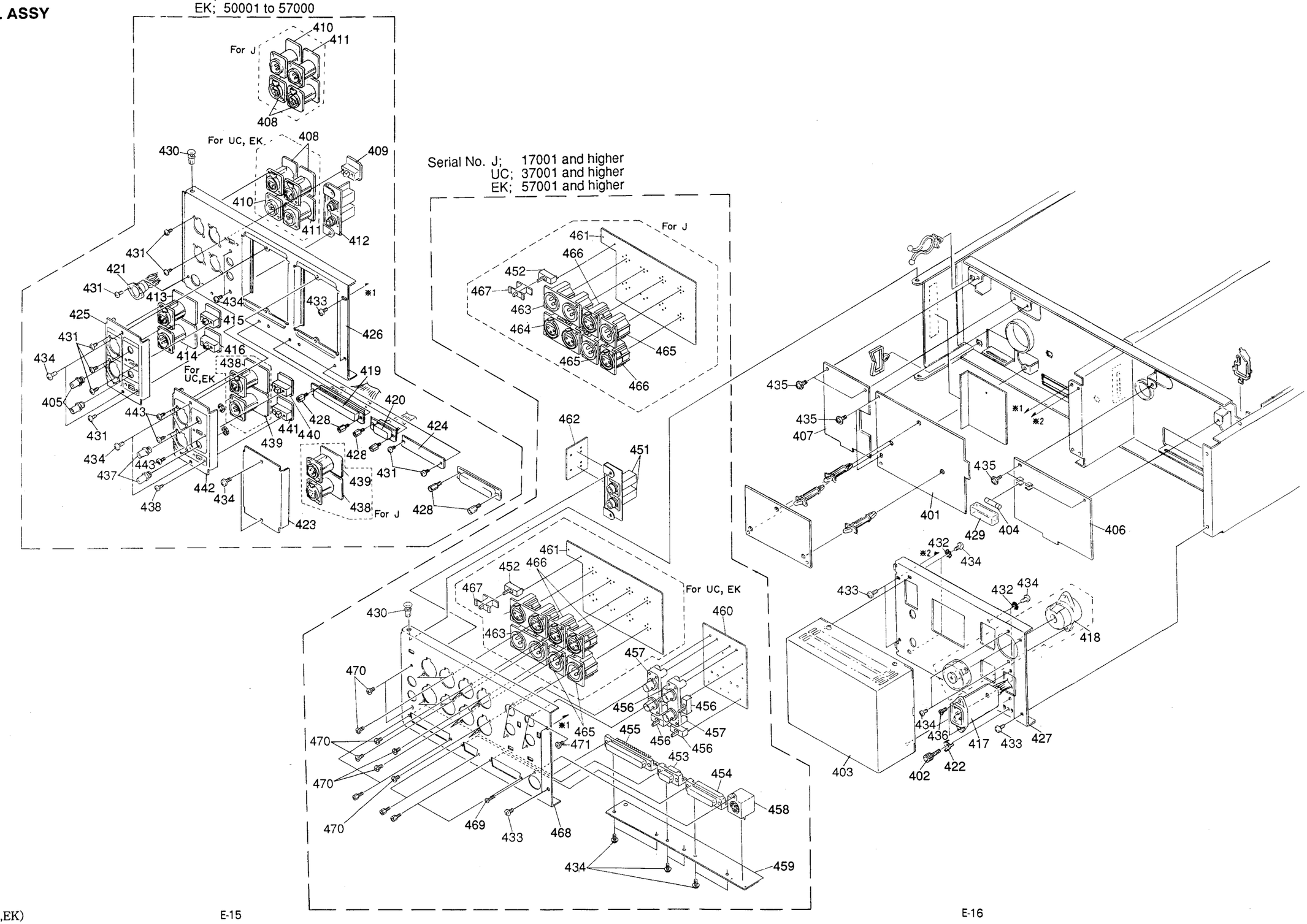

CASSETTE COMPARTMENT

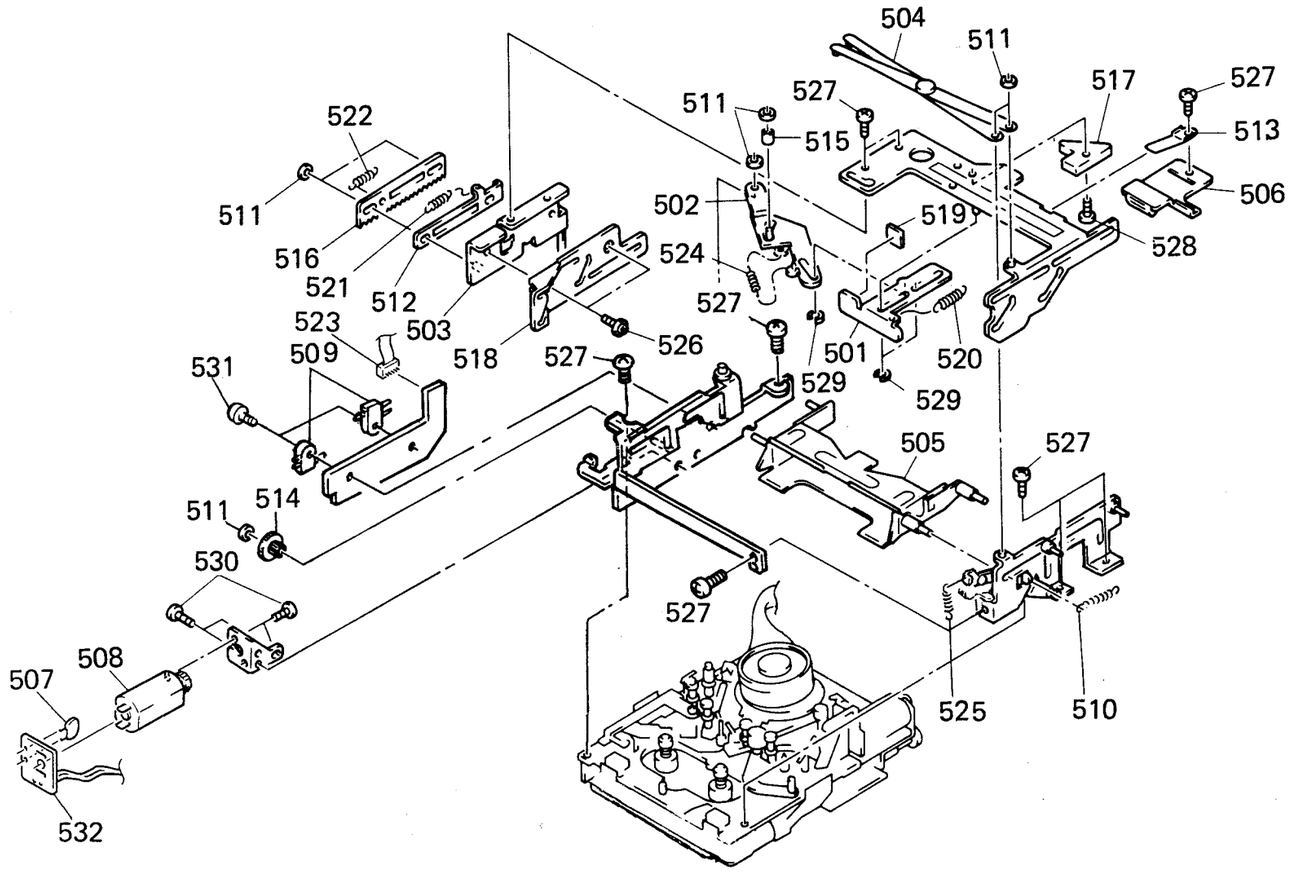

Index
No. Parts No. SP Description

No.	Parts No.	SP	Description
501	X-3346-903-1	o	SLIDER (EJ) ASSY
502	X-3346-904-1	o	LEVER (EJ) ASSY
503	X-3346-905-1	o	BRACKET (RODER) ASSY
504	X-3346-906-1	o	LEVER (X) ASSY
505	X-3346-913-1	o	HOLDER ASSY, CASSETTE
506	X-3346-916-2	o	LEVER (LOCK) ASSY
507	1-161-055-00	s	CAP, CERAMIC 0.022 20% 25V
508	X-3165-836-2	s	MOTOR ASSY
509	1-570-771-11	s	SWITCH
510	3-305-523-00	s	SPRING, TENSION
511	3-321-813-01	s	WASHER, COTTER POLYETHYLENE
512	3-346-912-01	o	LIMITER (RACK)
513	3-346-915-01	s	SPRING (LOCK)
514	3-346-918-12	s	WHEEL, WORM
515	3-346-936-01	s	ROLLER
516	3-346-949-01	s	RACK
517	3-346-950-01	o	PLATE, CAM
518	3-346-955-01	s	RODER (SUB)
519	3-346-962-01	o	CUSHION (EJ)
520	3-346-963-01	s	SPRING, TENSION
521	3-346-964-01	s	SPRING, TENSION
522	3-346-965-01	s	SPRING, TENSION
523	1-946-957-11	o	HARNESS (CCP)
524	3-570-892-00	s	SPRING, TENSION
525	4-877-850-00	s	SPRING, TENSION
526	7-621-255-15	s	SCREW +P 2x3
527	7-621-772-08	s	SCREW +B 2x3
528	7-621-772-20	s	SCREW +B 2x5
529	7-624-102-04	s	STOP RING 1.5, TYPE-E
530	7-627-554-07	s	SCREW, PRECISION +P 2x2.2
531	7-627-554-27	s	SCREW, PRECISION +P 2x6
532	1-640-230-11	s	PC BOARD, MTR

注 意; この頁の部品は、A-7810-551-D の構成部品です。

NOTE; The parts on this page are component parts of A-7810-551-D.

(ADA-18 BOARD)

Ref. No. or Q'ty	Part No.	SP	Description
RV302	1-238-802-11	s	RES, ADJ, CERMET 10K
RV303	1-238-803-11	s	RES, ADJ, CERMET 20K
RV401	1-238-805-11	s	RES, ADJ, CERMET 100K
RV402	1-238-802-11	s	RES, ADJ, CERMET 10K
RV403	1-238-803-11	s	RES, ADJ, CERMET 20K
RY1	1-515-677-11	s	RELAY
RY2	1-515-677-11	s	RELAY
RY301	1-515-677-11	s	RELAY
RY401	1-515-677-11	s	RELAY
S1	1-553-977-00	s	SWITCH, SLIDE
S101	1-552-573-00	s	SWITCH, SLIDE
S201	1-552-573-00	s	SWITCH, SLIDE
S301	1-552-573-00	s	SWITCH, SLIDE
S401	1-552-573-00	s	SWITCH, SLIDE

CP-157A/CP-157B BOARD (Up to Serial No. J:17000, UC:37000, EK:57000)

Ref. No. or Q'ty	Part No.	SP	Description
1pc	1-637-277-11	o	PC BOARD, CP-157A
C1	1-101-004-00	s	CERAMIC 0.01uF 50V0%
C2	1-102-973-00	s	CERAMIC 100PF 5% 50V
C3	1-102-973-00	s	CERAMIC 100PF 5% 50V
CN1	1-565-282-11	o	CONNECTOR, XLR 3P, FEMALE

CP-158 BOARD (Up to Serial No. J:17000, UC:37000, EK:57000)

Ref. No. or Q'ty	Part No.	SP	Description
1pc	1-637-282-12	o	PC BOARD, CP-158
1pc	7-682-547-04	s	SCREW +B 3X6
C1,C2	1-101-004-00	s	CERAMIC 0.01uF 50V0% (Up to Serial No. J:10050, UC:20025, EK:50065)
CN1	1-506-469-11	s	CONNECTOR, 4P, MALE
FB1	1-412-694-11	s	INDUCTOR, BEAD
FB2	1-412-694-11	s	INDUCTOR, BEAD
FB3	1-412-694-11	s	INDUCTOR, BEAD
FB4	1-412-694-11	s	INDUCTOR, BEAD
J1	1-507-863-51	s	JACK, PHONE
J2	1-507-863-51	s	JACK, PHONE

CP-171 BOARD

Ref. No. or Q'ty	Part No.	SP	Description
1pc	1-637-276-11	o	PC BOARD, CP-171
CN1	1-506-472-11	o	CONNECTOR, 7P, MALE
CN2	1-506-472-11	o	CONNECTOR, 7P, MALE
CN3	1-506-473-11	s	CONNECTOR, 8P, MALE
CN4	1-506-473-11	s	CONNECTOR, 8P, MALE
CN5	1-506-469-11	s	CONNECTOR, 4P, MALE
CN6	1-506-469-11	s	CONNECTOR, 4P, MALE
CN7	1-506-471-11	s	CONNECTOR, 6P, MALE
CN8	1-506-471-11	s	CONNECTOR, 6P, MALE
CN9	1-506-477-11	s	CONNECTOR, 12P, MALE
CN10	1-506-477-11	s	CONNECTOR, 12P, MALE
CN11	1-506-478-11	s	CONNECTOR, 13P, MALE
CN12	1-506-478-11	s	CONNECTOR, 13P, MALE

CP-172A/CP-172C BOARD (Up to Serial No. J:17000, UC:37000, EK:57000)

Ref. No. or Q'ty	Part No.	SP	Description
1pc	1-637-280-11	o	PC BOARD, CP-172A
C1	1-101-004-00	s	CERAMIC 0.01uF 50V0% (For CP-172A)
	1-102-973-00	s	CERAMIC 100PF 5% 50V (For CP-172C)
C2	1-102-973-00	s	CERAMIC 100PF 5% 50V (For CP-172A)
	1-101-004-00	s	CERAMIC 0.01uF 50V0% (For CP-172C)
C3	1-102-973-00	s	CERAMIC 100PF 5% 50V
CN1	1-565-281-11	o	CONNECTOR, XLR 3P, MALE
CN2	1-506-468-11	s	CONNECTOR, 3P, MALE

NOTE : Please see pages E-27 for the parts that are not listed in the parts list.

CP-172B/CP-172D BOARD (Up to Serial No. J:17000, UC:37000, EK:57000)

Ref. No. or Q'ty	Part No.	SP	Description
1pc	1-637-281-11	o	PC BOARD, CP-172B
C1	1-101-004-00	s	CERAMIC 0.01uF 50V0% (For CP-172B)
	1-102-973-00	s	CERAMIC 100PF 5% 50V (For CP-172D)
C2	1-102-973-00	s	CERAMIC 100PF 5% 50V (For CP-172B)
	1-101-004-00	s	CERAMIC 0.01uF 50V0% (For CP-172D)
C3	1-102-973-00	s	CERAMIC 100PF 5% 50V
CN1	1-565-281-11	o	CONNECTOR, XLR 3P, MALE
CN2	1-506-468-11	s	CONNECTOR, 3P, MALE

CP-173A BOARD (Up to Serial No. J:17000, UC:37000, EK:57000)

Ref. No. or Q'ty	Part No.	SP	Description
1pc	1-637-291-12	o	PC BOARD, CP-173A
C1	1-101-004-00	s	CERAMIC 0.01uF 50V0% (Up to Serial No. J:10050, UC:20025, EK:50065)
CN1	1-565-282-11	o	CONNECTOR, XLR 3P, FEMALE
CN2	1-506-468-11	s	CONNECTOR, 3P, MALE
FB1	1-535-178-00	s	BEAD, FERRITE
FB2	1-535-178-00	s	BEAD, FERRITE
FB3	1-535-178-00	s	BEAD, FERRITE

CP-173B BOARD (Up to Serial No. J:17000, UC:37000, EK:57000)

Ref. No. or Q'ty	Part No.	SP	Description
1pc	1-637-292-12	o	PC BOARD, CP-173B
C1	1-101-004-00	s	CERAMIC 0.01uF 50V0% (Up to Serial No. J:10050, UC:20025, EK:50065)
CN1	1-565-281-11	o	CONNECTOR, XLR 3P, MALE
CN2	1-506-468-11	s	CONNECTOR, 3P, MALE
FB1	1-535-178-00	s	BEAD, FERRITE
FB2	1-535-178-00	s	BEAD, FERRITE
FB3	1-535-178-00	s	BEAD, FERRITE

DC-47 BOARD

Ref. No. or Q'ty	Part No.	SP	Description
1pc	A-7850-817-A	o	COMPLETE PCB, DC-47
(This assembly includes the following parts.)			
C1	1-124-921-61	s	ELECT 470uF 20% 63VW
C2	1-126-163-11	s	ELECT 4.7MF 20% 50V
C3	1-124-911-11	s	ELECT 220uF 20% 50V
C4	1-130-495-00	s	MYLAR 0.1uF 5% 50V
C5	1-130-495-00	s	MYLAR 0.1uF 5% 50V
CN1	1-564-243-00	o	PIN, CONNECTOR 6P
CN2	1-564-242-00	o	PIN, CONNECTOR 5P
CN3	1-564-706-11	o	PIN HEADER, STRAIGHT 4P
CN4	1-564-210-00	o	PIN HEADER, STRAIGHT 12P
CN5	1-564-705-11	o	PIN HEADER, STRAIGHT 3P
CN6	1-564-209-00	o	PIN HEADER, STRAIGHT 10P
CN7	1-564-709-11	o	PIN HEADER, STRAIGHT 7P
CN8	1-564-707-11	o	CONNECTOR, 5P, MALE
CN9	1-506-469-11	s	CONNECTOR, 4P, MALE
D1	8-719-200-02	s	DIODE 10E2
D2	8-719-200-02	s	DIODE 10E2
D3	8-719-200-02	s	DIODE 10E2
D4	8-719-200-02	s	DIODE 10E2
D5	8-719-934-25	s	DIODE HZS33-1L
D6	8-719-200-02	s	DIODE 10E2
D7	8-719-910-61	s	DIODE HZ6A1L
Q1	8-729-400-81	s	TRANSISTOR 2SD1266-Q
R1	⚠1-212-865-00	s	FUSIBLE 22 5% 1/4W
R2	1-249-429-11	s	CARBON 10K 5% 1/4W
R3	1-249-433-11	s	CARBON 22K 5% 1/4W
R4	1-249-409-11	s	CARBON 220 5% 1/4W
R5	1-249-409-11	s	CARBON 220 5% 1/4W

NOTE : Please see pages E-27 for the parts that are not listed in the parts list.

CP-249 BOARD (Serial No. J:17001 and higher, UC:37001 and higher, EK:57001 and higher)

Ref. No. or Q'ty	Part No.	SP	Description
1pc	1-650-592-11	o	PRINTED CIRCUIT BOARD, CP-249
6pcs	7-682-547-04	s	SCREW +B 3X6
CN1	1-506-493-11	o	CONNECTOR 14P, MALE
CN2	1-506-484-11	o	CONNECTOR 5P, MALE
CN3	1-506-488-11	o	CONNECTOR 9P, MALE
CN4	1-506-487-11	o	CONNECTOR 8P, MALE
CN5	1-506-485-11	o	CONNECTOR 6P, MALE
CN6	1-506-487-11	o	CONNECTOR 8P, MALE
CN7	1-506-487-11	o	CONNECTOR 8P, MALE
CN8	1-563-773-21	o	CONNECTOR, D-SUB 37P, FEMALE
CN9	1-563-770-11	o	CONNECTOR, D-SUB 9P, FEMALE
CN10	1-563-772-11	o	CONNECTOR, D-SUB 25P, FEMALE
CN11	1-573-702-11	s	CONNECTOR 8P, FEMALE

CP-250 BOARD (Serial No. J:17001 and higher, UC:37001 and higher, EK:57001 and higher)

Ref. No. or Q'ty	Part No.	SP	Description
1pc	1-650-593-11	o	PRINTED CIRCUIT BOARD, CP-250
CN1	1-564-007-11	o	CONNECTOR 8P, MALE
CN2	1-506-469-11	s	CONNECTOR 4P, MALE
CN3	1-573-582-11	s	CONNECTOR, BNC, FEMALE
CN4	1-573-582-11	s	CONNECTOR, BNC, FEMALE
R1	1-247-804-11	s	CARBON 75 5% 1/4W
R2	1-247-804-11	s	CARBON 75 5% 1/4W
S1	1-570-157-51	s	SWITCH, SLIDE
S2	1-570-157-51	s	SWITCH, SLIDE
S3	1-570-157-51	s	SWITCH, SLIDE
S4	1-570-157-51	s	SWITCH, SLIDE

CP-251A/251B BOARD (Serial No. J:17001 and higher, UC:37001 and higher, EK:57001 and higher)

Ref. No. or Q'ty	Part No.	SP	Description
1pc	1-650-594-11	o	PRINTED CIRCUIT BOARD, CP-251
C1	1-102-973-00	s	CERAMIC 100PF 5% 50V
C2	1-102-973-00	s	CERAMIC 100PF 5% 50V
C3	1-101-004-00	s	CERAMIC 0.01uF 50V
C4	1-102-973-00	s	CERAMIC 100PF 5% 50V
C5	1-102-973-00	s	CERAMIC 100PF 5% 50V
C6	1-101-004-00	s	CERAMIC 0.01uF 50V
C7	1-102-973-00	s	CERAMIC 100PF 5% 50V
C8	1-101-004-00	s	CERAMIC 0.01uF 50V
C9	1-102-973-00	s	CERAMIC 100PF 5% 50V
C10	1-102-973-00	s	CERAMIC 100PF 5% 50V
C11	1-101-004-00	s	CERAMIC 0.01uF 50V
C12	1-102-973-00	s	CERAMIC 100PF 5% 50V
C13	1-102-973-00	s	CERAMIC 100PF 5% 50V
C14	1-101-004-00	s	CERAMIC 0.01uF 50V
C15	1-102-973-00	s	CERAMIC 100PF 5% 50V
C16	1-102-973-00	s	CERAMIC 100PF 5% 50V
C17	1-101-004-00	s	CERAMIC 0.01uF 50V
C18	1-102-973-00	s	CERAMIC 100PF 5% 50V
CN1	1-506-472-11	s	CONNECTOR 7P, MALE
CN2	1-564-007-11	o	CONNECTOR 8P, MALE
CN3	1-506-477-11	o	CONNECTOR 12P, MALE
CN4	1-506-478-11	o	CONNECTOR 13P, MALE
CN5	1-564-007-11	o	CONNECTOR 8P, MALE
CN6	1-506-469-11	s	CONNECTOR 4P, MALE
CN7	1-750-785-11	s	CONNECTOR, XLR 3P, MALE (For CP-251B)
	1-750-786-11	s	CONNECTOR, XLR 3P, FEMALE (For CP-251A)
CN8	1-750-785-11	s	CONNECTOR, XLR 3P, FEMALE (For CP-251A)
	1-750-786-11	s	CONNECTOR, XLR 3P, MALE (For CP-251B)
CN9	1-750-787-11	s	CONNECTOR, XLR 3P, MALE (For CP-251B)
	1-750-788-11	s	CONNECTOR, XLR 3P, FEMALE (For CP-251A)
CN10	1-750-787-11	s	CONNECTOR, XLR 3P, FEMALE (For CP-251A)
	1-750-788-11	s	CONNECTOR, XLR 3P, MALE (For CP-251B)
CN11	1-750-788-11	s	CONNECTOR, XLR 3P, FEMALE
CN12	1-750-787-11	s	CONNECTOR, XLR 3P, MALE
FB1	1-412-694-11	s	INDUCTOR, BEAD
FB2	1-412-694-11	s	INDUCTOR, BEAD
FB3	1-412-694-11	s	INDUCTOR, BEAD
FB4	1-412-694-11	s	INDUCTOR, BEAD
FB5	1-412-694-11	s	INDUCTOR, BEAD
FB6	1-412-694-11	s	INDUCTOR, BEAD
FB7	1-535-178-00	s	BEAD, FERRITE
FB8	1-535-178-00	s	BEAD, FERRITE
FB9	1-535-178-00	s	BEAD, FERRITE
FB10	1-535-178-00	s	BEAD, FERRITE
FB11	1-535-178-00	s	BEAD, FERRITE
FB12	1-535-178-00	s	BEAD, FERRITE

NOTE : Please see pages E-27 for the parts that are not listed in the parts list.

(CP-251A/251B BOARD)

Ref. No. or Q'ty	Part No.	SP	Description
R1	1-249-418-11	s	CARBON 1.2K 5% 1/4W
R2	1-249-418-11	s	CARBON 1.2K 5% 1/4W
R3	1-249-418-11	s	CARBON 1.2K 5% 1/4W
R4	1-249-418-11	s	CARBON 1.2K 5% 1/4W
S1	1-554-958-11	s	SWITCH, SLIDE

CP-256 BOARD (Serial No. J:17001 and higher,
---------- UC:37001 and higher, EK:57001 and higher)

Ref. No. or Q'ty	Part No.	SP	Description
1pc	1-651-318-11	o	PRINTED CIRCUIT BOARD, CP-256
1pc	7-682-547-04	s	SCREW +B 3X6
CN1	1-506-469-11	s	CONNECTOR 4P, MALE
FB1	1-412-694-11	s	INDUCTOR, BEAD
FB2	1-412-694-11	s	INDUCTOR, BEAD
FB3	1-412-694-11	s	INDUCTOR, BEAD
FB4	1-412-694-11	s	INDUCTOR, BEAD
J1	1-507-863-51	s	JACK, PHONE
J2	1-507-863-51	s	JACK, PHONE

NOTE : Please see pages E-27 for the parts that
are not listed in the parts list.

SV-123 BOARD

Ref. No. or Q'ty	Part No.	SP	Description
1pc	A-7850-813-A	o	COMPLETE PCB, SV-123

(This assembly includes the following parts.)

2pcs	7-682-903-11	s	SCREW +PWH 3X6
C101	1-162-201-31	s	CERAMIC 12PF 5% 50V
C102	1-162-201-31	s	CERAMIC 12PF 5% 50V
C103	1-164-232-11	s	CERAMIC 0.01uF 10% 50VOW
C105	1-164-232-11	s	CERAMIC 0.01uF 10% 50VOW
C106	1-126-157-11	s	ELECT 10uF 20% 16V
C107	1-164-232-11	s	CERAMIC 0.01uF 10% 50VOW
C109	1-136-160-00	s	FILM 0.039uF 5% 50VOW
C110	1-136-169-00	s	MYLAR 0.22uF 5% 50V
C111	1-136-172-00	s	FILM 0.39uF 5% 50VOW
C112	1-164-232-11	s	CERAMIC 0.01uF 10% 50VOW
C113	1-136-153-00	s	FILM 0.01uF 5% 50V
C114	1-126-157-11	s	ELECT 10uF 20% 16V
C115	1-164-232-11	s	CERAMIC 0.01uF 10% 50VOW
C116	1-126-157-11	s	ELECT 10uF 20% 16V
C117	1-136-153-00	s	FILM 0.01uF 5% 50V
C118	1-136-158-00	s	FILM 0.027uF 5% 50VOW
C119	1-130-473-00	s	MYLAR 0.0015uF 5% 50V
C120	1-164-232-11	s	CERAMIC 0.01uF 10% 50VOW
C122	1-126-157-11	s	ELECT 10uF 20% 16V
C124	1-164-232-11	s	CERAMIC 0.01uF 10% 50VOW
C125	1-164-232-11	s	CERAMIC 0.01uF 10% 50VOW
C127	1-163-017-00	s	CERAMIC, CHIP 0.0047uF 5% 50V
C128	1-164-232-11	s	CERAMIC 0.01uF 10% 50VOW
C133	1-136-153-00	s	FILM 0.01uF 5% 50V
C134	1-136-153-00	s	FILM 0.01uF 5% 50V
C136	1-126-157-11	s	ELECT 10uF 20% 16V
C138	1-164-232-11	s	CERAMIC 0.01uF 10% 50VOW
C141	1-136-153-00	s	FILM 0.01uF 5% 50V
C142	1-136-153-00	s	FILM 0.01uF 5% 50V
C143	1-136-153-00	s	FILM 0.01uF 5% 50V
C144	1-136-158-00	s	FILM 0.027uF 5% 50VOW
C145	1-130-473-00	s	MYLAR 0.0015uF 5% 50V
C146	1-164-232-11	s	CERAMIC 0.01uF 10% 50VOW
C147	1-136-153-00	s	FILM 0.01uF 5% 50V
C148	1-136-158-00	s	FILM 0.027uF 5% 50VOW
C149	1-130-473-00	s	MYLAR 0.0015uF 5% 50V
C150	1-136-153-00	s	FILM 0.01uF 5% 50V
C151	1-136-154-00	s	FILM 0.012uF 5% 50VOW
C152	1-136-159-00	s	FILM 0.033uF 5% 50V
C153	1-164-232-11	s	CERAMIC 0.01uF 10% 50VOW
C154	1-136-153-00	s	FILM 0.01uF 5% 50V
C155	1-136-154-00	s	FILM 0.012uF 5% 50VOW
C156	1-136-159-00	s	FILM 0.033uF 5% 50V
C158	1-164-232-11	s	CERAMIC 0.01uF 10% 50VOW
C159	1-164-232-11	s	CERAMIC 0.01uF 10% 50VOW
C160	1-164-232-11	s	CERAMIC 0.01uF 10% 50VOW
C161	1-164-232-11	s	CERAMIC 0.01uF 10% 50VOW
C162	1-164-232-11	s	CERAMIC 0.01uF 10% 50VOW
C163	1-164-232-11	s	CERAMIC 0.01uF 10% 50VOW
C164	1-164-232-11	s	CERAMIC 0.01uF 10% 50VOW
C165	1-164-232-11	s	CERAMIC 0.01uF 10% 50VOW
C166	1-164-232-11	s	CERAMIC 0.01uF 10% 50VOW
C167	1-164-232-11	s	CERAMIC 0.01uF 10% 50VOW

NOTE : Please see pages E-27 for the parts that are not listed in the parts list.

(SV-123 BOARD)

Ref. No. or Q'ty	Part No.	SP	Description
C168	1-164-232-11	s	CERAMIC 0.01uF 10% 50VOW
C169	1-164-232-11	s	CERAMIC 0.01uF 10% 50VOW
CN101	1-565-189-11	s	CONNECTOR, FPC 36P
CN102	1-506-477-11	s	CONNECTOR, 12P, MALE
CN103	1-506-473-11	s	CONNECTOR, 8P, MALE
CN104	1-506-472-11	s	CONNECTOR, 7P, MALE
CN105	1-562-883-11	o	CONNECTOR, FPC 20P, FEMALE
CN106	1-564-706-11	o	PIN HEADER, STRAIGHT 4P
D101	8-719-400-18	s	DIODE MA152WK
D102	8-719-812-43	s	LED TLG124A, GRN
D103	8-719-812-43	s	LED TLG124A, GRN
D104	8-719-812-43	s	LED TLG124A, GRN
D105	8-719-812-43	s	LED TLG124A, GRN
D106	8-719-812-41	s	LED TLR124, RED
D107	8-719-812-43	s	LED TLG124A, GRN
FB1	1-543-256-11	s	BEAD, FERRITE
FB2	1-543-256-11	s	BEAD, FERRITE
FB3	1-543-256-11	s	BEAD, FERRITE
IC101	8-752-835-62	s	IC CXP80524-053Q
IC102	8-759-946-81	s	IC CXD1052Q-Z
IC103	8-759-983-69	s	IC LM358PS
IC104	8-759-929-26	s	IC TL431CPS
IC105	8-759-983-69	s	IC LM358PS
IC106	8-759-983-69	s	IC LM358PS
IC107	8-752-030-63	s	IC CXA1046M
IC108	8-752-030-63	s	IC CXA1046M
IC109	8-759-983-69	s	IC LM358PS
IC110	8-759-983-69	s	IC LM358PS
IC111	8-759-925-80	s	IC SN74HC14ANS
IC112	8-759-925-76	s	IC SN74HC08ANS
IC113	8-759-239-23	s	IC TC74HC86AF
IC114	8-759-008-67	s	IC MC14066BF
IC115	8-759-925-90	s	IC SN74HC74ANS
IC116	8-759-926-77	s	IC SN74HC541ANS
IC117	8-759-927-46	s	IC SN74HC00ANS
L101	1-408-425-00	s	INDUCTOR 220uH
L102	1-408-425-00	s	INDUCTOR 220uH
L103	1-412-533-11	s	COIL 47uH
L104	1-412-533-11	s	COIL 47uH
Q101	8-729-216-22	s	TRANSISTOR 2SA1162-G
Q102	8-729-230-49	s	TRANSISTOR 2SC2712-YG
Q103	8-729-216-22	s	TRANSISTOR 2SA1162-G
Q104	8-729-230-49	s	TRANSISTOR 2SC2712-YG
Q105	8-729-216-22	s	TRANSISTOR 2SA1162-G
Q106	8-729-230-49	s	TRANSISTOR 2SC2712-YG
Q107	8-729-216-22	s	TRANSISTOR 2SA1162-G
Q108	8-729-230-49	s	TRANSISTOR 2SC2712-YG
Q109	8-729-230-49	s	TRANSISTOR 2SC2712-YG
Q110	8-729-230-49	s	TRANSISTOR 2SC2712-YG
Q111	8-729-230-49	s	TRANSISTOR 2SC2712-YG
Q112	8-729-230-49	s	TRANSISTOR 2SC2712-YG
Q113	8-729-230-49	s	TRANSISTOR 2SC2712-YG
Q114	8-729-901-00	s	TRANSISTOR DTC124EK
Q115	8-729-901-00	s	TRANSISTOR DTC124EK
Q116	8-729-901-00	s	TRANSISTOR DTC124EK
Q117	8-729-901-00	s	TRANSISTOR DTC124EK

(SV-123 BOARD)

Ref. No. or Q'ty	Part No.	SP	Description
Q118	8-729-901-00	s	TRANSISTOR DTC124EK
Q119	8-729-901-00	s	TRANSISTOR DTC124EK
R104	1-216-683-11	s	METAL, CHIP 22K 0.5% 1/10W
R107	1-216-687-11	s	METAL, CHIP 33K 0.5% 1/10W
R108	1-216-687-11	s	METAL, CHIP 33K 0.5% 1/10W
R111	1-216-695-11	s	METAL, CHIP 68K 0.5% 1/10W
R112	1-216-683-11	s	METAL, CHIP 22K 0.5% 1/10W
R113	1-216-692-11	s	METAL, CHIP 51K 0.5% 1/10W
R116	1-216-687-11	s	METAL, CHIP 33K 0.5% 1/10W
R117	1-216-673-11	s	METAL, CHIP 8.2K 0.5% 1/10W
R119	1-216-679-11	s	METAL, CHIP 15K 0.5% 1/10W
R122	1-216-043-00	s	METAL, CHIP 560 5% 1/10W
R123	1-216-691-11	s	METAL, CHIP 47K 0.5% 1/10W
R124	1-216-696-11	s	METAL, CHIP 75K 0.5% 1/10W
R131	1-216-651-11	s	METAL, CHIP 1K 0.5% 1/10W
R134	1-216-662-11	s	METAL, CHIP 3K 0.5% 1/10W
R146	1-216-651-11	s	METAL, CHIP 1K 0.5% 1/10W
R149	1-216-662-11	s	METAL, CHIP 3K 0.5% 1/10W
RV101	1-241-632-11	s	RES, ADJ, CARBON 47K
RV102	1-241-632-11	s	RES, ADJ, CARBON 47K
RV103	1-238-017-11	s	RES, ADJ, CARBON 22K
RV104	1-238-017-11	s	RES, ADJ, CARBON 22K
SW101	1-570-602-11	s	SWITCH, DIP 2-CKT
X101	1-579-064-11	s	VIBRATOR, CRYSTAL

SW-420 BOARD

Ref. No. or Q'ty	Part No.	SP	Description
1pc	1-637-270-11	o	PC BOARD, SW-420
CN8	1-946-966-11	o	HARNESS (SW)
CN9	1-506-469-11	s	PIN, CONNECTOR 4P
D49	8-719-911-19	s	DIODE 1SS119
D50	8-719-911-19	s	DIODE 1SS119
D51	8-719-911-19	s	DIODE 1SS119
D52	8-719-911-19	s	DIODE 1SS119
S28	1-554-937-11	s	SWITCH, KEY BOARD
S29	1-554-937-11	s	SWITCH, KEY BOARD
S30	1-554-937-11	s	SWITCH, KEY BOARD
S31	1-554-937-11	s	SWITCH, KEY BOARD

SW-426 BOARD (Up to Serial No. J:17000, UC:37000, EK:57000)

Ref. No. or Q'ty	Part No.	SP	Description
1pc	1-637-279-11	o	PC BOARD, SW-426
CN1	1-506-471-11	s	CONNECTOR, 6P, MALE
R1	1-249-418-11	s	CARBON 1.2K 5% 1/4W
R2	1-249-418-11	s	CARBON 1.2K 5% 1/4W
R3	1-249-418-11	s	CARBON 1.2K 5% 1/4W
R4	1-249-418-11	s	CARBON 1.2K 5% 1/4W
S1	1-554-970-11	s	SWITCH, SLIDE

SW-453 BOARD (Up to Serial No. J:17000, UC:37000, EK:57000)

Ref. No. or Q'ty	Part No.	SP	Description
1pc	1-637-293-12	o	PC BOARD, SW-453
CN1	1-506-468-11	s	CONNECTOR, 3P, MALE
R1	1-247-804-11	s	CARBON 75 5% 1/4W
S1	1-554-970-11	s	SWITCH, SLIDE

SW-454 BOARD (Up to Serial No. J:17000, UC:37000, EK:57000)

Ref. No. or Q'ty	Part No.	SP	Description
1pc	1-637-294-12	o	PC BOARD, SW-454
CN1	1-506-469-11	s	CONNECTOR, 4P, MALE
S1	1-554-970-11	s	SWITCH, SLIDE

NOTE : Please see pages E-27 for the parts that are not listed in the parts list.

このマニュアルに記載されている事柄の著作権は当社にあり，説明内容は機器購入者の使用を目的としています。
従って，当社の許可なしに無断で複写したり，説明内容(操作，保守等）と異なる目的で本マニュアルを使用することを禁止します。

The material contained in this manual consists of information that is the property of Sony Corporation and is intended solely for use by the purchasers of the equipment described in this manual.
Sony Corporation expressly prohibits the duplication of any portion of this manual or the use thereof for any purpose other than the operation or maintenance of the equipment described in this manual without the express written permission of Sony Corporation.

Le matériel contenu dans ce manuel consiste en informations qui sont la propriété de Sony Corporation et sont destinées exclusivement à l'usage des acquéreurs de l'équipement décrit dans ce manuel.
Sony Corporation interdit formellement la copie de quelque partie que ce soit de ce manuel ou son emploi pour tout autre but que des opérations ou entretiens de l'équipement à moins d'une permission écrite de Sony Corporation.

Das in dieser Anleitung enthaltene Material besteht aus Informationen, die Eigentum der Sony Corporation sind, und ausschließlich zum Gebrauch durch den Käufer der in dieser Anleitung beschriebenen Ausrüstung bestimmt sind.
Die Sony Corporation untersagt ausdrücklich die Vervielfältigung jeglicher Teile dieser Anleitung oder den Gebrauch derselben für irgendeinen anderen Zweck als die Bedienung oder Wartung der in dieser Anleitung beschriebenen Ausrüstung ohne ausdrückliche schriftliche Erlaubnis der Sony Corporation.